This is a reproduction of a library book that was digitized by Google as part of an ongoing effort to preserve the information in books and make it universally accessible.

Google books

https://books.google.com

B 414998

EXPERIMENTAL WIRELESS

& The WIRELESS ENGINEER

VOLUME
-THREE-

JAN-DEC
~1926~

Digitized by Google

32/5

1837
ARTES VERITAS SCIENTIA
LIBRARY OF THE
UNIVERSITY OF MICHIGAN
TUEBOR
SI QUÆRIS PENINSULAM AMŒNAM
CIRCUMSPICE

PHYSICS LIBRARY

Digitized by Google

Physics Library
QC
1
.W8

Digitized by Google

Digitized by Google

EXPERIMENTAL WIRELESS
& The WIRELESS ENGINEER

VOLUME THREE

JAN.-DEC. 1926

ILIFFE & SONS, LTD., Dorset House, Tudor Street, London, E.C.4

Price 6d. net.

Digitized by Google

Digitized by Google

INDEX.

I. GENERAL INDEX.

(N.B.—The figures in parentheses, following the subject, refer to the Dewey Decimal System of Classification, see Index III).

PAGE

Abstracts of Technical Articles from the world's wireless journals, 54, 121, 189, 253, 325, 381, 451, 508, 567, 635, 699, 765 ... ...
Absolute Measurement of Resistance at Radio Frequencies (R240). R. M. Wilmotte 725
Accumulator, A new Theory of the Lead (621.355.01). Prof. G. W. O. Howe ... 466
Accumulator, A new Theory of the Lead (Correspondence) 646
A.C. Filament Supply (Patents) 126
Aerial Separation (Patents) 196
Aerials, Wireless, and the Landlord (R540.07) By a Barrister 433
Aerial Plate (Patents) 463
Aerial, An Interesting Frame (Patents) ... 582
Aerial, An Underground (Patents) 775
Alignment Charts for Selective Amplifiers (R082). W. A. Barclay 344
Alignment Principle (Correspondence) ... 119
Amateur DX in South America by CH.9TC. (R545.009.2) 108
Amateur Radio Telegraphy (R.350) K. S. Wakefield 175
Amateur Long-Distance Work (R545.009.2). H. N. Ryan 563, 710
Ammeter, Multi-range, of Constant Resistance (R384.6). L. G. A. Sims and M. Heywood Hunt 425
Ammeter Panel (R251), E. C. Atkinson ... 544
Among the Experimental Transmitters (R009.2) 53, 214, 270, 424
Amplification Scheme (Patents) 464
Amplification and Selectivity of a Neutralised Tuned Anode Circuit (R161 and R162), Dr. N. W. McLachlan 545
Amplifier, Crystal (Patents) 776
Amplifier, Low Current Resistance (Patents) 647
Amplifier, Peculiar (Patents) 712
Amplifier, Radio-frequency (Patents) ... 648
Amplifier, Resistance (Patents) 776
Amplifier, Stabilising (Patents) 713
Amplifier, Stabilised, Another (Patents) ... 714
Amplifiers, Alignment charts for selective (R082), W. A. Barclay 344
Amplifiers, Examination of the Properties of Audio-frequency (R132), W. Baggally 628
Amplifiers, Examination of the Properties of Audio-frequency (Correspondence) ... 707
Amplifiers, Audio-frequency (Patents) ... 468
Amplifiers, Four-Electrode Valve (Patents) 333
Amplifiers, Peculiar Patent (Patents) ... 62
Amplifiers, Performance of (R342), H. A. Thomas 15
Amplifiers, Push-Pull (Patents) 335
Amplifiers, Selective (Correspondence) ... 118
Anode Current from Mains (R355.007.5) ... 416
Another "Round" Loud-speaker (Patents) 261

PAGE

"Aperiodic" or "Untuned" (Correspondence) 393, 518
Atmospheric Elimination, A System of (Patents) 398
Atmospheric Elimination, Note on a system of (R431), S. Butterworth 618
Atmospheric Elimination (Patents) 711
Atmospherics, Directional Recording of (R114, R125), R. A. Watson Watt ... 234

Battery, A Floating (Patents) 775
Beam Service, Inauguration of the Canadian (Editorial) 715
Berlin Wireless Exhibition (R064) 653
B.E.S.A. Glossary of Terms used in Electrical Engineering (Editorial) 587
B.E.S.A. Glossary of Terms used in Electrical Engineering (Review) 612
Beverage Aerial (Correspondence) ... 117, 258
Binding Case and Index 151
Book Reviews and Books Received:
B.E.S.A. Glossary of Technical Terms ... 612
British Standard Glossary of Terms used in Electrical Engineering 507
Der Detektor, Dr. R. Lehnhardt 395
Dictionary of Wireless Technical Terms 709
Die Audionröhre und ihre Wirkung, Dr. G. Liebert... 321
Electrical Engineers' Data Books... ... 321
Elimination of Interference in W.T, M. Singlemann 395
Loud-speakers, C. M. R. Balbi 395
Modern Printing Telegraphy 395
Modern Radio Communication, J. H. Reyner 395
Oscillographs, J. T. Irwin 321
Proceedings of the Wireless Section of the I.E.E. 395
Slide Rule Simplified, D. E. Rogers ... 395
Variations of Apparent Bearings of Radio Transmitting Stations, Radio Research Board 507
Wireless Annual for 1926 40
British Wireless Exports 151
Broadcast Station, Germany's High Power (R016.5) 411
Broadcast Receiver Design, Problems in (R100.04), Capt. P. P. Eckersley ... 499

Calibration Department 51
Calibration Department (Editorial) ... 65
Calibration Department (Temporarily closed) 518
Calibration of Ultra Short Wavelengths (R213), F. Aughtie 633
Canadian Beam Service, The Inauguration of (Editorial) 715
Capacity Lead-in (Patents) 125
Carborundum Detector, Another (Patents) 521
Cathode Ray Reception (Patents) 332

Digitized by Google

PAGE

Cathode Ray Tubes (Editorial) 525
Cause and Elimination of Night Errors in Radio Direction-Finding (R510), R. L. Smith-Rose and R. H. Barfield ... 367
Circuit, Crystal-Valve (Patents) 777
Circuit, Four-Electrode Valve Supersonic (Patents) 650
Circuit, Interesting Neutralised (Patents) ... 584
Circuit, Reaction Rejector (Patents) ... 775
Circuit, Super-Regenerative (Patents) ... 582
Circuit, Valve Generator (Patents) 584
Coils, Nick-o-Time Tunometer (R382.009) 300
Common Errors in Condenser Calculations (R127.2), E. H. W. Banner 556
Compensating for Distortion (Patents) ... 262
Condenser, Calculations, Common Errors in (R127.2), E. H. W. Banner 556
Condenser, Differentially-Operated (Patents) 198
Condenser, Newey (Patents) 264
Condenser, Permanency of Calibration of a Variable (R220), E. Simeon 348
Condenser, Potentiometer (R381.5), E. Bainbridge Bell 282
Condenser, Power Loss in (R145.5), L. Hartshorn 225
Condenser, Power Loss in (Correspondence) 324, 392
Condenser, Screening of Small Variable Air (Correspondence) 58, 117
Condenser, Variable Air, Notes on the Laws of (R381.4), W. H. F. Griffiths ... 3
Condenser, Variable Air, Further Notes on the Laws of (R381.4), W. H. F. Griffiths 743
Cone, Double (Patents) 595
Constant Beat Frequency (Patents) ... 398
Constructing a Self-Contained Ballistic Galvanometer (R384.6), F. A. Boyce ... 440
Control of Filament Current (Patents) ... 262
Controlling Regeneration (Patents) 197
Controlling A Continuous-Wave Generator (Patents) 335
Correlation of some recent advances in Wireless (R010), Balth. van der Pol ... 338
Correspondence, 57, 117, 188, 258, 323, 390, 460, 517, 579, 645, 707
Crystal Patent, An Interesting (Patents) ... 650
Crystal, Frequency Stabilisation of Transmitter by means of Oscillating Quartz (R351), C. W. Goyder 717
Crystal Amplifier (Patents) 776
Crystal-Valve Circuit (Patents) 777
Crystal-Controlled Receiver (Patents) ... 778
Curves and Tables for Short-Wave Calculations (R080.127.3), A. P. Castellain ... 46

Dame Melba's Farewell (Correspondence) 188
Department of Scientific and Industrial Research (R218) 531
Detachable Grid-Leak (Patents) 260
Detachable Panel Legs (Patents) 332
Detection with a Four-Electrode Valve (Patents) 128
Detector, Another Carborundum (Patents) 521
Diaphragm, A Double Cone (Patents) ... 199
Diaphragm, A Reinforced (Patents) ... 264
Diaphragm, a Multiple-Cone (Patents) ... 463
Diaphragm, A Polygonal (Patents) 334
Diaphragm, A Conical (Patents) 464
Differentially-Operated Condenser (Patents) 198

PAGE

Direct Current Smoothing Devices for H.T. Supply (Editorial) 65
Direct Current Test Set (R384), T. S. Skeet 553
D.C. Instruments in Wireless Receivers (R251), J. F. Herd 565
Directional Recording Atmospherics (R.114, R125), R. A. Watson Watt 234
Direction-Finding, Cause and Elimination of Night Errors (R510), R. L. Smith-Rose and R. H. Barfield 367
Disturbance Eliminator (Patents) 260
Distortion, Compensating for (Patents) ... 262
Double-Cone Diaphragm (Patents) 199
Double-Filament Rectifying Valve (Patents) 399
Double Earth Receiving System (Patents ... 519
Double Filament Valve (Patents) 520
Double Cone (Patents) 585
Dubilier Loud-speaker (Patents) 262
Duplex Signalling (Patents) 522
DX Work with a Receiving Valve (R545.1), A. D. Gay 477

Earth Connections, Multiple (Patents) ... 648
Editorials:
Abstracts and References 401
Another Question of Nomenclature ... 132
B.E.S.A. Glossary of Terms 588
Cathode Ray Tubes 525
Common Logarithms or Natural Logarithms 1
D.C. Smoothing Devices for H.T. Supply 65
Early Work of Prof. A. S. Popoff ... 132
Esperanto 401
Esperanto and the Reader... 1
Esperanto and Technical Literature ... 465
Further Question of Nomenclature ... 201
German Radio Exhibition 652
Historical Wireless Apparatus at Munich 337
Inauguration of the Canadian Beam Service 715
Inductance of Straight Wires 1
j, the Heaviside Operator and $\sqrt{-1}$ ... 266
Mathematical Articles 250
New Editorial Appointments 1
Polarisation of Electromagnetic Waves ... 201
Power Loss in Insulating Materials ... 525
Valve Nomenclature 465
Who discovered the Long-Range of Short Waves ? 129
Who Invented the Neutrodyne ? 523
Eddy Current Loud-speaker (Patents) ... 582
Effective Resistance of Inductance Coils at Radio Frequency (R144), S. Butterworth 203, 309, 417, 483
Effective Resistance of Inductance Coils at Radio Frequency (Correspondence) ... 579
Electrical Alloy (Patents) 60
Electrical Control of Light (Patents) ... 713
Electro-Dynamic Loud-speaker (Patents) ... 336
Electrostatic Screen (R387), E. Bainbridge Bell 282
Electrostatic Microphone (Patents) 336
Electrostatic Loud-speaker (R376.3), (Ref.) 388
Elliptical Diaphragm Loud-speaker (Patents) 648
Emerald Wavemeter 498
Errata 248, 321, 394, 462, 518
Esperanto:
Abstracts in Esperanto (Correspondence) 58, 118
Esperanto and the Reader (Editorial Views) 1
For the Esperantists, Distordado ... 63

Digitized by Google

PAGE

Esperanto Section (Abstracts of articles in previous issues) 390, 460, 515, 577, 643, 705, 773
Esperanto and Technical Literature (Editorial) 465
Examination of the Properties of Audio-Frequency Amplifiers (R132), W. Baggally 628
Exhibition, Berlin Wireless (R064) ... 653
Exhibition, German Radio (Editorial) ... 651
Exhibition, N.A.R.M.A.T. Wireless ... 248
Exhibition, National Radio (R064) ... 620
Experimental Radio Station G 2DX, (R625), W. K. Alford 19
Experimental Transmitters, Among the (R009.2) 53, 214, 270, 424
Experimenters' Wireless Laboratory (R201), L. A. Sayce and J. Taylor 69, 144, 243
Exports, British Wireless 151

Fading, The Mystery of (R113.1.009), Oliver Hall 211
Fading, The Mystery of (Correspondence) ... 392
Fading, (R113.1), Prof. E. W. Marchant ... 288
Fading (Correspondence) 394, 517, 708
Fading and Mountains (Correspondence) 580, 646
Fibre (Vulcanised) and Press Boards, Standard Specification for 93
Filament, Mullard (Patents) 61
Filament, An Interesting (Patents) 126
Filament, Supply, An A.C. (Patents) ... 127
Filter Circuits, Selective (Patents) 62
Floating Battery (Patents) 775
Four-Electrode Valve Amplifier (Patents) ... 333
Four-Electrode Valve Circuit (Patents) ... 400
Four-Electrode Valve Supersonic Circuit (Patents) 650
Frequency Variations in Thermionic Generators (R344.2), Lt.-Col. K. E. Edgeworth 101
Frequency, Maintaining Constant (Patents) 399
Frequency Transformer for Short Waves (Patents) 519
Frequency Stabilisation of a Transmitter (R351), C. W. Goyder 717
From the World's Wireless Journals, Abstracts of Technical Articles 54, 121, 189, 253, 325
Further Notes on the Laws of Variable Air Condensers (R381.4), W. H. F. Griffiths 743

Galvanometer, Constructing a Self-Contained Ballistic (R384.6), F. A. Boyce ... 440
Galvanometer, A very Sensitive Valve (R251), Prof. G. W. O. Howe 634
Galvanometer, A very Sensitive Valve (Correspondence) 709
Gas Discharge Rectifier (Patents) 649
Generator, Controlling a Continuous-Wave (Patents) 335
Generator, Impulse Excitation (Patents) ... 582
German Radio Exhibition (Editorial) ... 651
Germany's High Power Broadcasting Station (R616.5) 411
Glossary of Terms, The B.E.S.A. (Editorial) 587
Glossary of Terms, The B.E.S.A. (Review) ... 612
Grid, A Stamped (Patents) 127
Grid-leak Construction (Patents) 259
Grid-leak, A Detachable (Patents) 260
Grid-leak, Another Variable (Patents) ... 399

PAGE

Harmonics and their effect on Wave Form (R110), J. F. Herd 407
Heaviside Operator and $\sqrt{-1}$ (Correspondence) 579
Hertz, H., Memorial at Karlsruhe 177
Heterodyne Reception (Patents) 583
High-Frequency Electric Currents, some Remarkable Effects of Large (R100.009.1), G. H. Farnes 77
H.F. Resistance (R240), P. K. Turner ... 134
High-Tension Rectifier for a Low-Power Transmitter (R355.51), T. S. Skeet ... 599
Historical Wireless Apparatus at Munich (Editorial) 337
How Far is that Station? (R081), H. E. Adshead 251
How Far is that Station? (Correspondence) 392
Howling in Short-Wave Receivers (Correspondence) 59, 117

I.E.E. Wireless Section of the (Editorial) ... 65
I.E.E., An Announcement (R060) ... 115
I.E.E., Opening of the Session (R060), Dr. Eccles' Address 724
I.E.E., Wireless Section. Papers read:
Audio-Frequency Measurements (R290 ... 370
Chairman's Address (R060) (Abstract) ... 121
Cause and Elimination of Night Errors in Radio Direction-Finding (R510), R. L. Smith-Rose and R. H. Barfield (R510) 367
Directional Recording of Atmospherics (R114, R125), R. A. Watson Watt ... 234
Frequency Variations in Thermionic Generators (R344.2), Lt.-Col. K. E. Edgeworth 101
Instantaneous Direct-Reading Goniometer (R114, R125), R. A. Watson Watt and J. F. Herd. 239
Low-Frequency Intervalve Transformers (R132.1), P. W. Willans 435
Past, Present and Future Developments of Wireless Telephony (R550), Capt. P. P. Eckersley 114
The Propagation of Radio Waves (R113), J. Hollingworth 178
Wireless Development since the War (R599), Dr. W. H. Eccles 740
Improving Selectivity (Patents) 778
Impulse Excitation Generator (Patents) ... 582
Inauguration of the Canadian Beam Service (Editorial) 715
Inductance of Straight Wires (Editorial Views) 1
Inductance, A Spaced (Patents) 264
Inductance Coils, Effective Resistance of at Radio Frequency (R144), S. Butterworth 203, 309, 417, 483
Inductance Coils, Losses in (R143), S. Butterworth 267
Inductance Coils Quantitatively Compared (R240), A. L. M. Sowerby ... 220, 363
Inductance Coils, Quantitatively Compared (Correspondence) 461, 518, 581
Instantaneous Direct-Reading Radiogoniometer (R114, R125), R. A. Watson Watt and J. F. Herd 239
Insulating Material (Patents) 60
Interesting Frame Aerial (Patents) 582
Interesting Neutralised Circuit (Patents) ... 584
Interesting Crystal Patent (Patents) ... 650
International Morse Code 482

Digitized by Google

PAGE

Intervalve Couplings, Some Notes on (R132), H. L. Kirke 350
Introducing Sodium and Potassium into Discharge Tubes (R535.3), J. Taylor ... 762

J, the Heaviside Operator and $\sqrt{-1}$ (Correspondence) 394, 462

Keying Transmitters (Patents) 263
Keying of Valve Transmitters (R385), W. T. Ditcham 526
" Kone " Loud-speaker (Patents) 126
Königswusterhausen Broadcasting Station (R616.5) 411

Laboratory, An Experimenter's Wireless (R201), L. A. Sayce and J. Taylor 69, 144
Laboratory Notes (R387 and R381.5), E. Bainbridge Bell 282
Light, Electrical Control of (Patents) ... 713
Logarithms, Common or Natural (Editorial Views) 1
Long-Distance Work (R545.009.2), H. N. Ryan (5BV) ... 52, 109, 249, 308, 380, 563, 710
Long and Short Waves, The Relative Values of (R040), R. S. G. B. Discussion ... 692
Lorenz High-Frequency System for Radio Transmission (R421), F. W. Gillard ... 215
Losses in Inductance Coils, The Need for a Standard of Efficiency (R143), S. Butterworth 267
Loud-speaker, Another " Round " (Patents) 261
Loud-speaker, Dubilier (Patents) 262
Loud-speaker, Eddy Current (Patents) ... 582
Loud-speaker, Electro-Dynamic (Patents) ... 336
Loud-speaker, Elliptical Diaphragm (Patents) 648
Loud-speaker, " Kone " (Patents) 126
Loud-speakers, Method of Calibrating (R290), H. J. Round 604
Loud-speakers (R376.3), N. W. McLachlan 152
Low-Current Resistance Amplifier (Patents) 647
Low-Frequency Intervalve Transformers (R132.1), P. W. Willans 435
Low-Loss Coil Former (Patents) 261

Magnetic Component, Utilising the (Patents) 199
Mains Units, Voltage Regulation of (Patents) 712
Mains Receiver (Patents) 777
Maintaining Constant Frequency (Patents) ... 399
Makeshifts (Correspondence) 581
Mathematical Articles (Editorial) 250
Mathematics for Wireless Amateurs (510), F. M. Colebrook ... 283, 373, 446, 493, 559, 613, 674, 756
Measurement of Resistance at Radio Frequencies, the Absolute (R240), R. M. Wilmotte 725
Melba, Dame N., Farewell Letter 188
Mercury Contact Switches and Connecting Boards (R387), T. B. Baker 317
Method of Calibrating Microphones and Loud-speakers (R290), H. J. Round ... 604
Microphone, An Electrostatic (Patents) ... 336
Microphones and Loud-speakers, Method of Calibrating (R290), H. J. Round ... 604
Microphone, A Reisz (Patents) ... 403, 777
M-L Intervalve Coupling (Patents) 307

PAGE

Modified Igranic Transformer (Patents) ... 260
Multiple Variometer (Patents) 521
Multiple Earth Connections (Patents) ... 648
Multi-Range Ammeter of Constant Resistance (R384.6), L. G. A. Sims and M. Heywood Hunt 425
Mystery of Fading (R113.1.009), Oliver Hall 211
Mystery of Fading (Correspondence) ... 393

N.A.R.M.A.T. Wireless Exhibition ... 248
National Radio Exhibition (R064) ... 620
Neutralisation Scheme (Patents) 711
Neutrodyne ? Who Invented the (Editorial) 523
Neutrodyne Condenser (Patents) 259
New Slide Rule 171
New Theory of the Lead Accumulator ? (621.355.0), Prof. G. W. O. Howe ... 466
New Theory of the Lead Accumulator ? (Correspondence) 646
New Method of Obtaining Frequency Stabilisation of a Transmitter (R351), C. W. Goyder 717
New Theory, A, The Effect of the Moon on Radio Reception (R113.9), D. Shannon 420
New Theory, A, The Effect of the Moon on Radio Reception (Correspondence) 517, 579
New Valve Rectifier, Inexpensive Accumulator Charging from A.C. Mains (R355.55), L. A. Sayce 269
Newey Condenser (Patents) 264
Nick-o-Time Tunometer Coils (R382.009) 300
Nomenclature, Another Question of (Editorial) 129
Nomenclature, Another Question of (Correspondence) 188, 323
Nomenclature, A Further Question of (Editorial) 201
Nomenclature, Valve, A New Term Suggested (R030), Prof. G. W. O. Howe ... 67
Nomenclature, Valve, A New Term Suggested (Correspondence) 324
Notes on the Laws of Variable Air Condensers (R381.4), W. H. F. Griffiths ... 3
Note on System of Atmospheric Elimination (R431), S. Butterworth 618

Obtaining Anode Current from Mains (R355.007.5) 416
Opening of the I.E.E. Session, Dr. Eccles' Address (R060) 724
Oscillation, Suppressing Parasitic (Patents) 584
Oscillator, Short-Wave (Patents) 647
Our Predecessor (Editorial) 66

Panel, A Pivoted (Patents)... 585
Particulars of German Amateur Valves 322
Past, Present and Future Developments of Wireless Telephony (R550), Capt. P. P. Eckersley 114
Patent Infringement and Experimental Use (R347), by a Patent Agent 113
Patents, Some Recent ... 60, 125, 196, 259, 332, 396, 463, 519, 582, 647, 711, 775
Patents (Correspondence) 59, 118
Patents, Supersonic (Correspondence) ... 180
Peaked Audio Amplifiers (R342) 387
Peculiar Receiving Circuit (Patents) ... 396
Peculiar Amplifier (Patents) 712
Performance of Amplifiers (R342), H. A. Thomas, M.Sc. 15

Digitized by Google

PAGE

Permanency of Calibration of a Variable Condenser (R220), E. Simeon 348
Phototelegraphy, Wireless (R582) 301
Piezo-Electric Effect and its Application to Wireless (R351.218), C. W. Goyder ...94, 165
Pivoted Panel (Patents) 585
Plate Current, Use of, Plate Voltage Characteristics (R131), E. Green 402, 469
Plate Current, Plate Voltage Characteristics (Correspondence) 645, 707
Plate Aerial (Patents) 463
Polarisation of Electromagnetic Waves (Editorial) 201
Polygonal Diaphragm (Patents) 334
Popoff, Prof. A. S., Early Work of (Editorial) 130
Power Loss in Condensers (R145.5), L. Hartshorn 225
Power Loss in Condensers (Correspondence) 324, 392
Power Loss in Insulating Materials (Editorial) 525
Power Loss in Insulating Materials (Correspondence) 646
Preventing Self Oscillation (Patents) ... 196
Problems in Broadcast Receiver Design (R160.04), P. P. Eckersley 499
Propagation of Radio Waves (R113), J. Hollingworth 178
Push-Pull Amplifier (Patents) 335

Quenched Receiving System (Patents) ... 197

Radio-Frequency Amplifier (Patents) ... 648
Radiogoniometer, Instantaneous Direct-Reading (R114, R125), R. A. Watson Watt and J. F. Herd 239
Radio Society of Great Britain:
A Review of Last Year's Activities (R.060) 116
Annual Dinner 133
R.S.G.B. Lectures:
Fading (R113.1), Prof. E. W. Marchant ... 288
Loud-speakers (R376.3), N. W. McLachlan 152
Problems in Broadcast Receiver Design (R160.04), P. P. Eckersley 499
Relative Values of Long and Short Waves (R040). Discussion 692
Short Waves for Long Ranges (R401.24), Capt. W. G. H. Miles, R.M. 22
Some Facts and Notions about Short Waves (R110), Capt. Duncan Sinclair 79
Some Notes on Intervalve Couplings (R132), H. L. Kirke 350
Television (R586.04) J. L. Baird ... 730
Radio-Wien (R616.5), Prof. G. W. O. Howe 533
Reaction Rejector Circuit (Patents) ... 775
Readers' Views (Correspondence) 119
Receiver, Crystal-Controlled (Patents) ... 778
Receiver Design, Problems in Broadcast (R160.04), P. P. Eckersley 499
Receivers, D.C. Instrument in Wireless (R251), J. F. Herd 565
Receiver, A Mains (Patents) 777
Receiver, A Reflex (Patents) 714
Receiving System, An Interesting (Patents) 126
Recent Developments in Short Wave Wireless Telegraphy (R401), H. Rukop 606, 681
Reception, The Effect of the Moon on (R113.8), D. Shannon 429
Reception, Trigger System of (Patents) ... 520
Reception, Heterodyne (Patents) 583

PAGE

Rectification Scheme (Patents) 334
Rectifiers for High Tension Supply (R355.5), R. Mines 41, 105, 182
Rectifier, A New Valve (R355.55), L. A. Sayce 269
Rectifier, A High Tension for a Low-Power Transmitter (R355.51), T. S. Skeet ... 599
Rectifier, A Gas Discharge (Patents) ... 649
Reflex Circuit (Patents) 519
Reflex Receiver (Patents) 714
Regeneration Control (Patents) 396
Reinforced Diaphragm (Patents) 264
Reisz Microphone (Patents) 463, 777
Rejectors and Absorbers (R432.1), Prof. G. W. O. Howe 131
Rejectors and Absorbers (Correspondence) 258
Rejector Circuit, Reaction (Patents) ... 775
Relative Values of Long and Short Waves (R040), R.S.G.B. Discussion 692
Research, Department of Scientific and Industrial (R218) 531
Resistance, Absolute Measurement of at Radio Frequencies (R.240), R. M. Wilmotte 725
Resistance Amplifier (Patents) 776
Resistance-Coupled Reflex Receiver (Patents) 125
Resistance, H.F. (R240), P. K. Turner ... 134
Resistances, Wire Anode (R383) 378
Rectification of Small Radio-Frequency Potential Differences by means of Triode Valves (R134, R134), F. M. Colebrooke 34, 90
Retroaction, Controlling (Patents) 61
R.I. Tuner (Patents 397
Royal Society Discussion. The Upper Layer (R113.4) 242
Rugby Radio Station of the British Post Office (R611), E. H. Shaughnessy 543, 771

Safety Lead-in Tube (Patents) 397
Selective Reception (Patents) 332
Selectivity, Improving (Patents) 778
Short Wavelengths. Ultra-calibration of (R213), F. Aughtie 633
Screened Aerial System (Patents) 60
Screening of Small Variable Air Condensers (Correspondence) 58, 117
Selective Amplifiers (Correspondence) ... 118
Short-Wave Calculations, Curves and Tables (R080.127.3), A. P. Castellain 46
Short-Wave Oscillator (Patents) 647
Short-Wave Receivers, Howling in (Correspondence) 59
Short-Wave Stations, G2DX (R625), W. K. Alford 10
Short-Wave Wireless Telegraphy, Recent Developments in (R401), H. Rukop 606, 681
Short Waves for Long Ranges. Capt. W. G. H. Miles, R.M. 22
Short Waves, Some facts and notions about (R110), Capt. Duncan Sinclair ... 79
Short Waves, Who Discovered the Long Range of? (Editorial) 129
Slide-Rule, A New 171
Sodion Tube (Correspondence) 709
Sodium and Potassium, Introducing, into Discharge Tubes (R535.3), J. Taylor ... 762
Spaced Inductance (Patents) 264
Squegger Circuit, Another (Patents) ... 259

Digitized by Google

PAGE

Some facts and Notions about Short Waves (R110), Capt. Duncan Sinclair ... 79
Some Notes on Intervalve Couplings (R132), H. L. Kirke 350
Some Remarkable Effects of Large H.F. Electric Currents (R100.009.1), G. H. Farnes 77
Space-charge Valve (Patents) 128
Stabilised Amplifier, Another (Patents) ... 714
Stabilising Amplifiers (Patents) 713
Standard Specification for Vulcanised Fibre and Press Boards 93
Straight-line Relationship, The (R381.4.01), Oliver Hall 302
Super-Regenerative Circuit (Patents) ... 583
Supersonic Patents (Correspondence) ... 188
Supersonic Transmission (Patents) 398
Supersonic Circuit, A Four-electrode Valve (Patents) 650
Suppressing Parasitic Oscillation (Patents)... 584
Switches and Connecting Boards, Mercury Contact (R387), T. B. Baker 317

Talking Arc (Patents) 520
Television (R586.04), J. L. Baird ... 730
Television Detail (Patents) 520
Television, The Latest Advance Towards (R586), L. Fournier 514
Test Set, Transformer (R342.7.009) 172
Test Set, Direct Current (R384), T. S. Skeet 553
Thermionic Voltmeter (R261), W. B. Medlam and U. A. Oschwald 582, 664
Transatlantic Telephony (R615.12), A. Oswald and El Deloraine 514
Transformer, A Modified Igranic (Patents) ... 260
Transformer Construction, Radio Frequency (Patents) 396
Transformer Curves (Correspondence) 57, 120. 324
Transformer Test Set (R342.7.009) 172
Transformers, Low-frequency Intervalve (R132.1), P. W. Willans 435
Transmission, A Note on (R344.3) 492
Transmitters, The Keying of Valve (R385), W. T. Ditcham 526
Trigger System of Reception (Patents) ... 520
Tuning System (Patents) 585

Underground Aerial (Patents) 775
Universal Testing Volt-Ammeter (R260.251) 104
Upper Layer, The (Discussion at the R.S.) (R113.4) 242
Use of Small Receiving Valves for Transmitting (R344.3), A. G. Wood 223
Utilising the Magnetic Component (Patents) 199

Valve Construction (Patents) 586
Valve Cooling Detail (Patents) ... 60
Valve, Detection with a Four-electrode (Patents) 128
Valve, Double Anode (Patents) 62
Valve, Double Filament (Patents) 521
Valve, Double Filament Rectifying (Patents) 399
Valve Generator Circuit (Patents) 584
Valve Nomenclature (Editorial) 465
Valve Nomenclature (Correspondence) ... 645
Valve Nomenclature—A New Term Suggested (R030), Prof. G. W. O. Howe ... 67
Valve, Space-charged (Patents) 128
Valve Supply (Patents) 197
Valve, Use of Small Receiving for Transmitting (R344.3), A. G. Wood 223
Valves, Particulars of German Amateur ... 322
Variable Air Condensers, The Laws of (R381.4), W. H. F. Griffiths 743
Variations in the Thermionic and Photo-electric Emission for Platinum and Tungsten (R138), T. Harrison 456
Variometer, A Multiple (Patents) 521
Varley Magnet Co. 498
Very Sensitive Valve Galvanometer (R251), Prof. G. W. O. Howe 634
Very Sensitive Valve Galvanometer (Correspondence) 709
Vibrating Electrode (Patents) 61
Vienna Broadcasting Station (Radio-Wien) (R616.5), Prof. G. W. O. Howe ... 533
Volt-Ammeter, Universal Testing (R260.251) 104
Voltage Node, Taking Advantage of (R344.3) 492
Voltage Regulation of Mains Units (Patents) 712
Voltmeter, The Thermionic (R261), W. B. Medlam and U. A. Oschwald ... 589, 664

Wave-Form, Harmonics and Their Effect on (R110), J. F. Herd... 407
Wavemeter, The Emerald 498
Wave-Trap Arrangement (Patents) ... 196
Waves, Propagation of Radio (R113), J. Hollingworth 178
"Wipe Out" (Correspondence) ... 118, 258
Wire Anode Resistances (R383) 378
Wireless Annual for 1926 40
Wireless Aerials and the Landlord (R540.07). By A Barrister 433
Wireless Development since the War (R599) Dr. W. H. Eccles 740
Wireless Phototelegraphy (R582) 301
Wireless Section of the I.E.E. (Editorial) ... 65
Wireless Telephony, The Past, Present and Future Developments of (R550), Capt. P. P. Eckersley 114

Digitized by Google

II. NAMES OF CONTRIBUTORS.

PAGE

ADSHEAD, H. E. How Far is that Station? (R081) 251
ALFORD, W. K. Experimental Radio Station G2DX (R625) 19
ATKINSON, E. C. An Ammeter Panel (R.251) 544
AUGHTIE, F. Calibration of Ultra Short Wavelengths (R213) 633
BAGGALLY, W. Examination of the Properties of Audio-Frequency Amplifiers (R132) 628
BAIRD, J. L. Television (R586.04) ... 730
BAKER, T. B. Mercury Contact Switches and Connecting Boards (R387) ... 317
BANNER, E. H. W. Common Errors in Condenser Calculations (R127.2) ... 556
BARCLAY, W. A. Alignment Charts for Selective Amplifiers (R082) 344
BARFIELD, R. H., and SMITH ROSE, R. L. The Cause and Elimination of Night Errors in Radio Direction Finding (R510) 367
BOYCE, F. A. Constructing a Self-contained Ballistic Galvanometer (R384.6) ... 440
BUTTERWORTH, S. Effective Resistance of Induction Coils at Radio-frequency (R144) 203, 309, 417, 483
Losses in Inductance Coils, The Need for a Standard of Efficiency (R143) 267
Note on a System of Atmospheric Elimination (R431) 618
CASTELLAIN, A. P. Curves and Tables for Short-Wave Calculations (R080.127.3) 46
COLEBROOK, F. M. Rectification of Small Radio-Frequency Potential Differences (R134) 34, 90
Mathematics for Wireless Amateurs (510) 283, 373, 446, 493, 559, 613, 674, 756
DITCHAM, W. T. The Keying of Valve Transmitters (R385) 526
ECCLES, Dr. W. H. Wireless Development since the War (R599) (I.E.E. Wireless Section) 740
ECKERSLEY, Capt. P. P. The Past, Present and Future Developments of Wireless Telephony (R550) 114
Problems in Broadcast Receiver Design (R160.04) 499
EDGEWORTH, Lt.-Col. K. E. Frequency Variations in Thermionic Generators (R344.2) 101
GAY, A. D. DX Work with a Receiving Valve (R545.1) 477
GILLARD, F. W. The Lorenz H.F. System for Radio Transmission (R421) ... 215
GOYDER, C. W. Piezo-Electric Effect and its Application to Wireless (R351.218) 94, 165
New Method of Obtaining Frequency Stabilisation of a Transmitter (R351) 717
GREEN, E. Use of Plate Current-Plate Voltage Characteristics (R131) ... 402, 469

PAGE

GRIFFITHS, W. H. F. Variable Air Condensers (R381.4) 3
Further Notes on the Laws of Variable Air Condensers (R381.4) ... 743
HALL, Dr. OLIVER. The Mystery of Fading (R113.1.009) 211
The Straight-Line Relationship (R381.4.01) 302
HARTSHORN, L. Power Loss in Condensers (R145.5) 225
HERD, J. F. An Instantaneous Direct-Reading Radiogoniometer (R114, R.125) 239
Harmonics and their effect on Wave Form (R110) 407
D.C. Instruments in Wireless Receivers (R251) 565
HOLLINGWORTH, J. The Propagation of Radio Waves (R113) 178
HOWE, Prof. G. W. O. Technical Editor of EXPERIMENTAL WIRELESS AND THE WIRELESS ENGINEER 1
Valve Nomenclature—A New Term Suggested (R030) 67
Rejectors and Absorbers (R432.1) ... 131
A New Theory of the Lead Accumulator (621.355.01) 466
Radio Wien (R616.5) 533
Very Sensitive Valve Galvanometer (R251) 634
HUNT, M. HEYWOOD. The Multi-Rrange Ammeter of Constant Resistance (R384.6) 425
KIRKE, H. L. Some Notes on Intervalve Couplings (R132) 350
MCLACHLAN, N. W. Loud-speakers (R376.3) 152
Amplification and Selectivity of a Neutralised Tuned-Anode Circuit (R161 and R162) 545
MARCHANT, Prof. E. W. Fading (R113.1) ... 288
MEDLAM, W. B. The Thermionic Voltmeter (R261) 589, 664
MILES, Capt. W. G. H., R.M. Short Waves for Long Ranges (R401.24) 22
MINES, R. Rectifiers for H.T. Supply, Additional (R355.5) 41, 105, 182
OSCHWALD, U. A. The Thermionic Voltmeter (R261) 589, 664
RAVEN-HART, R. (Ch.9TC). Amateur DX in South America (R545.009.2) ... 108
ROUND, H. J. A Method of Calibrating Microphones and Loud-speakers (R290) 604
RUKOP, H. Recent Developments in Short-Wave Wireless Telegraphy (R401) 606, 681
RYAN, H. N. Long-Distance Work (R545.009.2) 52, 109, 249, 308, 380, 563, 710
SAYCE, L. A. An Experimenter's Wireless Laboratory (R201) ... 69, 144, 243
A New Valve Rectifier (R355.55) ... 269

Digitized by Google

PAGE

SHANNON, D. A New Theory, The Effect of the Moon on Radio Reception (R113.8) 429
SHAUGHNESSY, E. H. The Rugby Radio Station of the British Post Office (R611) 271
SIMEON, E. Permanency of Calibration of a Variable Condenser (R220) 348
SIMS, L. G. A. The Multi-Range Ammeter of Constant Resistance (R384.6) ... 425
SKEET, T. S. Direct-Current Test Set (R384) 553
High-Tension Rectifier for a Low-Power Transmitter (R355.51) ... 599
SMITH ROSE, R. L. and BARFIELD, R. H. The Cause and Elimination of Night Errors in Radio Direction-Finding (R510) 367
SOWERBY, A. L. M. Inductance Coils Quantitatively Compared (R240) 220, 363
TAYLOR, J. An Experimenter's Wireless Laboratory (R201) ... 69, 144, 243
Introducing Sodium and Potassium into Discharge Tubes (R535.3) ... 762

PAGE

THOMAS, H. A. The Performance of Amplifiers (R342) 15
TURNER, P. K. Editorial 66
H.F. Resistance (R240) 134
VAN DER POL, DR. BALTH. The Correlation of Some Recent Advances in Wireless (R010) 338
WAKEFIELD, K. S. Amateur Radio Telegraphy (R350) 175
WATT, R. A. WATSON. Directional Recording of Atmospherics (R114, R125) 234
An Instantaneous Direct-Reading Radiogoniometer (R114, R125) ... 239
WILMOTTE, R. M. Absolute Measurement of Resistance at Radio Frequencies (R240) 725
WOOD, A. G. Use of Small Receiving Valves for Transmitting (R344.3) 223
WILLANS, P. W. Low-Frequency Intervalve Transformers (R132.1) ... 435

III. DEWEY DECIMAL CLASSIFICATION.

PAGE

R000.—Wireless in General.

R008 Digest of U.S. Wireless Patents, J. BRADY 508
R009.2 Among the Experimental Transmitters ... 53, 214, 270
R010 The Correlation of some recent advances in Wireless, VAN DER POL 338
R030 Valve Nomenclature—A New Term Suggested, Prof. G. W. O. HOWE 67
R040 Relative Values of Long and Short Waves, R.S.G.B. Discussion 692
R060 I.E.E. Wireless Section, An Announcement 115
R.S.G.B., A Review of Last Year's Activities 116
Opening of the I.E.E. Session, Dr. ECCLES' Presidential Address 724
R064 National Radio Exhibition (R064) 620
Berlin Wireless Exhibition ... 653
R080.127.3 Curves and Tables for Short-Wave Calculations, A. P. CASTELLAIN 46
R081 How far is that Station? H. E. ADSHEAD 251
R082 Alignment Charts for Selective Amplifiers, W. A. BARCLAY 344
R084 Maps and Wireless Waves, R. KEEN 567

PAGE

R100.—General Principles and Theory.

R100.009.1 Some Remarkable Effects of Large H.F. Electric Currents, G. H. FARNES ... 77
R110 Some Facts and Notions about Short Waves, Capt. DUNCAN SINCLAIR 79
Harmonics and their Effect on Wave Form, J. F. HERD ... 407
R113 The Propagation of Radio Waves, J. HOLLINGWORTH 178
R113.1.009 The Mystery of Fading, Dr. OLIVER HALL 211
R113.4 The Upper Layer (Discussion at the R.S.) 242
R113.8 A New Theory, The Effect of the Moon on Radio Reception, D. SHANNON 429
R114 Directional Recording of Atmospherics, R. A. WATSON WATT 234
An Instantaneous Direct-Reading Radiogoniometer, R. A. WATSON WATT and J. F. HERD 239
R125 Directional Recording of Atmospherics, R. A. WATSON WATT 234
An Instantaneous Direct-Reading Radiogoniometer, R. A. WATSON WATT and J. F. HERD 239

Digitized by Google

		PAGE
R127.2	Common Errors in Condenser Calculations, E. H. W. BANNER	556
R131	Use of Plate Current-Plate Voltage Characteristics, E. GREEN	402, 469
R132	Some Notes on Intervalve Couplings, H. L. KIRKE ...	350
	Examination of the Properties of Audio-Frequency Amplifiers, W. BAGGALLY ...	628
R132.1	Low-Frequency Intervalve Transformers, P. W. WILLANS	435
R134	Rectification of Small Radio-Frequency Potential Differences, F. M. COLEBROOK ...	34, 90
R143	Losses in Inductance Coils, The Need for a Standard of Efficiency, S. BUTTERWORTH	267
R144	Effective Resistance of Induction Coils at Radio-Frequency, S. BUTTERWORTH ...	203, 309, 417, 483
R145.5	Power Loss in Condensers, L. HARTSHORN	225
R160.04	Problems in Broadcast Receiver Design, P. P. ECKERSLEY	499
R161. R162	Amplification and Selectivity of a Neutralised Tuned Anode Circuit, N. W. MCLACHLAN	545

R200.—Measurements and Standards.

R201	An Experimenter's Wireless Laboratory, L. A. SAYCE and J. TAYLOR ...	69, 144, 243
R213	Calibration of Ultra Short Wavelengths, F. AUGHTIE ...	633
R218	Department of Scientific and Industrial Research ...	531
R220	The Permanency of Calibration of a Variable Condenser, E. SIMEON	348
R240	H.F. Resistance, P. K. TURNER	134
	Inductance Coils Quantitatively Compared, A. L. M. SOWERBY	220, 363
R240	The Absolute Measurement of Resistance at Radio Frequencies, R. M. WILMOTTE	725
R251	Very Sensitive Valve Galvanometer, Prof. G. W. O. HOWE	634
R260.251	Universal Testing Volt-Ammeter	104
R261	Thermionic Voltmeter, W. B. MEDLAM and U. A. OSCHWALD	589, 664
R290	Audio-Frequency Measurements	370
	Method of Calibrating Microphones and Loud-speakers, H. J. ROUND	604

R300.—Apparatus and Equipment.

R340	Sources of "A," "B," and "C" power for Radio Receivers, W. HOLLAND ...	512
R342	The Performance of Amplifiers, H. A. THOMAS	15
R342.5	Neutralising the Crystal Amplifier, J. M. CLAYTON ...	328
R342.7.009	Transformer Test Set ...	172
R344.2	Frequency Variations in Thermionic Generators, Lt.-Col. K. E. EDGEWORTH	101
R344.3	The Use of Small Receiving Valves for Transmitting, A. G. WOOD	223
	A Note on Transmission, The Voltage Node	492
R347	Patent Infringement and Experimental Use	113
R350	Amateur Radio Telegraphy, K. S. WAKEFIELD	175
R351	New Method of Obtaining Frequency Stabilisation of a Transmitter, C. W. GOYDER	717
R351.218	Piezo-Electric Effect and Its Application to Wireless, C. W. GOYDER ...	94, 165
R355.007.5	Obtaining Anode Current from Mains	416
R355.5	Rectifiers for H.T. Supply, R. MINES	41, 105, 182
R355.51	High-Tension Rectifier for a Low Power Transmitter, T. S. SKEET	599
R355.55	A New Valve Rectifier, L. A. SAYCE	269
R376.3	Loud-speakers. N. W. MCLACHLAN	152
R381.4	Notes on the Laws of Variable Air Condensers, W. H. F. GRIFFITHS	3
	Further Notes on the Laws of Variable Air Condensers, W. H. F. GRIFFITHS ...	743
R381.4.01	The Straight Line Relationship, Dr. OLIVER HALL ...	302
R381.5	A Condenser Potentiometer, E. BAINBRIDGE BELL ...	282
R382	Toroids, F. J. MARCO ...	124
R382.009	Nick-o-Time Tunometer Coils	300
R383	Wire Anode Resistances ...	378
R384	Direct Current Test Set, T. S. SKEET	553
R384.6	Multi-Range Ammeter of Constant Resistance, L. G. A. SIMS and M. H. HUNT. ...	425
	Constructing a Self-Contained Ballistic Galvanometer, F. A. BOYCE	440
R385	Keying of Valve Transmitters, W. T. DITCHAM	526
R387	An Electrostatic Screen, E. BAINBRIDGE BELL	282
	Mercury Contact Switches and Connecting Boards, T. B. BAKER	317
R388	The Use of the Cathode Ray Tube as a Wattmeter, etc., Prof. J. A. FLEMING ...	56

R400.—Systems of Working.

R401	Recent Developments in Short-Wave Wireless Telegraphy, H. RUKOP	606, 681
R401.24	Short Waves for Long Ranges, Capt. W. G. H. MILES ...	22

Digitized by Google

		PAGE
R421	The Lorenz H.F. System for Radio Transmission, F. W. GILLARD	215
R431	Note on a System of Atmospheric Elimination, S. BUTTERWORTH	618
R432.1	Rejectors and Absorbers, Prof. G. W. O. HOWE	131

R500.—Applications and Uses.

R510	The Cause and Elimination of Night Errors in Radio Direction-Finding, R. L. SMITH ROSE and R. H. BARFIELD	367
R535.3	Introducing Sodium and Potassium into Discharge Tubes, J. TAYLOR	762
R540.07	Wireless Aerials and the Landlord, by A Barrister ...	433
R545.009.2	Amateur DX in South America, by Ch9TC ...	108
	Long-Distance Work, H. N. RYAN	52, 109, 249, 308, 380, 563, 710
R251	An Ammeter Panel, E. C. ATKINSON	544
	D.C. Instruments in Wireless Receivers, J. F. HERD ...	565
R545.1	DX Work with a Receiving Valve, A. D. GAY	477
R550	The Past, Present and Future Developments of Wireless Telegraphy, Capt. P. P. ECKERSLEY	114
R582	Wireless Phototelegraphy ...	301
R586-04	Television, J. L. BAIRD ...	730
R599	Wireless Development since the War, Dr. W. H. ECCLES	740

R600.—Stations, Design, Operation and Management.

R611	Rugby Radio Station of the British Post Office, E. H. SHAUGHNESSY	271
R616.5	Germany's High Power Broadcast Station	411
	Radio Wien, Prof. HOWE ...	533
R625	Experimental Radio Station G2DX	19

Non-Radio Subjects.

510	Mathematics for Wireless Amateurs, F. M. COLEBROOK ...	283, 373, 446, 493, 559, 613, 674, 756
621.355.01	A New Theory of The Lead Accumulator? Prof. G. W. O. HOWE	466

Vacher—39240

Digitized by Google

EXPERIMENTAL WIRELESS & The WIRELESS ENGINEER

VOL. III. JANUARY, 1926. No. 28.

Editorial Views.

New Editorial Appointments.

WITH this issue we not only commence a new volume of E.W. & W.E. but are able to announce an important change in the editorial management of the journal.

Our readers will be interested to learn that Prof. G. W. O. Howe, D.Sc., M.I.E.E., has undertaken to act as Technical Editor, whilst the Editorship passes to Mr. H. S. Pocock, who is also Editor of the sister journal *The Wireless World*, with which he has been associated in that capacity for many years.

With the appointment of Prof. Howe an old association is renewed, for he acted as Editor of the *Radio Review* from its first publication until its amalgamation with *The Wireless World*.

Prof. Howe, who was for many years Assistant Professor of Electrical Engineering at South Kensington, and later Head of the Department of Electrical Measurements, including Radio Telegraphy, at the National Physical Laboratory, is now Professor of Electrical Engineering at Glasgow University. He was Chairman of the Wireless Section of the Institution of Electrical Engineers from 1921 to 1923. He has been a Vice-President of the Radio Society of Great Britain from its inception and is a member of the Radio Research Board of the Department of Scientific and Industrial Research.

Our readers will see in these appointments a proof of the determination of the publishers to maintain the high standard which has always been one of the outstanding features of E.W. & W.E.

We have recently received several letters from readers suggesting that articles on various subjects would be very acceptable. Our readers may rest assured that we welcome such suggestions and that every effort will be made to meet their expressed wishes by publishing authoritative but simple articles on the subjects suggested.

We trust that every reader will do what he can to make E.W. & W.E. known to other wireless workers.

Common Logarithms or Natural Logarithms?

IN the article entitled "Curves and Tables for Short Wave Calculations" contributed by Mr. A. P. Castellain, he works out several examples of the inductance of coils. The formulæ involve logarithms and these logarithms are the so-called natural or Naperian logarithms to the base ϵ. Now the question which arises is this: is it preferable to work in these natural logarithms or to convert them straight away into the more familiar common logarithms to the base 10? Mr. Castellain apparently prefers the former method, but personally we always employ the latter method in such calculations. Not only are tables of common logarithms

Digitized by Google

much more likely to be found at hand, but one can read them directly off any slide rule with an accuracy sufficient for almost every application apart from the class of work which is done at such institutions as the National Physical Laboratory. Not only so, but our whole system of numbers is based on the decimal system and the common system of logarithms is specially designed to facilitate calculations. One need only look at Mr. Castellain's calculation of log_ε 1 970 to appreciate the point, for everyone knows that log_{10} 100 is 2, but who could say at once that log_ε 100 is 4.605? When we have to calculate $log_\varepsilon\ 8a/\rho$ we therefore prefer to call it 2.3 $log_{10}\ 8a/\rho$, and having divided $8a$ by ρ on the slide rule, to read off the logarithm of the quotient and multiply it by 2.3 without writing a single figure.

The Inductance of Straight Wires.

IT is generally stated that the inductance of a straight wire of length l cms. and small radius ρ cms. is for high frequencies given by the formula

$$L = 2l\,(log_\varepsilon\ 2l/\rho - 1) \text{ cms.}$$

This is the formula given by Mr. Castellain in his article in this number, but let us look a little more closely into the meaning of the term the "inductance" of a piece of straight wire.

The formula given refers only to that part of the magnetic flux which lies between two parallel planes perpendicular to the wire and passing through its extremities. The current in the wire of length l produces a greater magnetic flux outside these planes than between them—the total flux is indeed infinite, as one can prove by simple integration—and however useful the above expression may be in subsequent calculations, there appears to be no justification for calling this the self inductance of the piece of conductor.

Similarly the formula usually given for the mutual inductance between two parallel conductors of length l is really a formula for the magnetic flux due to unit current in the wire AB, which passes through the rectangular strip shown shaded which must be assumed to stretch away to infinity. Now this is a very useful thing to know, but it is not at all clear why one should call it the mutual inductance between the two wires.

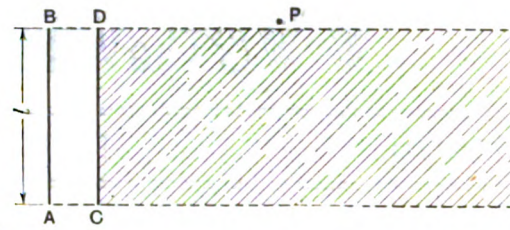

This is generally defined as the lines due to unit current in AB which cut the wire CD. Now who will say that the line of force due to AB which passes down through the paper at P got there without cutting the wire CD? The application of the terms self and mutual inductance to straight pieces of wire without any reference to the rest of the circuit is bound to lead to such difficulties.

Esperanto and the Reader.

FOR some time past a good deal of space has been devoted in E.W. & W.E., month by month, to the international language, Esperanto. With the commencement of a new volume it is natural that the question of the relative importance of various sections of the Journal should receive the special attention of the editors. To guide us in our decision as to whether or not the space and attention which has been devoted to Esperanto in the past has met with the approval of our readers, we invite those readers who appreciate the section to send us a post-card expressing their views, and our decision regarding the allocation of space to Esperanto in the future will be largely influenced by the response received to this invitation.

Digitized by Google

Notes on the Laws of Variable Air Condensers.

By W. H. F. Griffiths. **[R381·4**

AMONG the most important components of a modern wireless receiving set are its variable condensers, and care should therefore be exercised in the selection or design of these units for any particular purpose. If the maximum capacity of a condenser is too great, tuning by its means may become too critical due to its having too great a capacity change for a given angular movement, more particularly at the commencement of its scale. This effect may be minimised by the fitting of a worm gear or other form of fine adjustment gearing to enable very fine angular movement to be smoothly performed, but again it must be remembered that in most wireless circuits employing potential-operated detectors and amplifiers, such as crystals and thermionic valves, the capacity of oscillatory circuits at resonance should be kept within limits, as the oscillatory potential available across these circuits is proportional to the reactance of that capacity, which is inversely proportional to that capacity.

If, on the other hand, a variable condenser has too small a maximum capacity value, there is a probability that it will have a far too limited *range* of capacity variation, due to the fact that its minimum or "zero" capacity cannot possibly be reduced *proportionately* to its maximum capacity, especially when it is augmented by the distributed capacity of the inductance coil with which it is paralleled and by various lead capacities, inter-electrode valve capacities, etc. If the condenser is fitted with an electrostatic screen which is connected electrically to its moving plate system, its minimum capacity is even more seriously augmented because of the large surfaces of fixed plate system and screen (between which the full potential difference exists), which are of necessity *constantly* in fairly close proximity unless the size of the screen is made impossibly large.

When a variable condenser of the correct value has been chosen, some idea as to the "law" connecting its capacity variation with angular movement must be known.

Assuming that the mechanical imperfections of a condenser have been removed (*i.e.*, that each moving plate rotates truly parallel with, and exactly midway between, the pair of fixed plates with which it interleaves) the capacity change, if semi-circular plates are employed, should follow the straight line law

$$C = a\theta + b \quad .. \quad .. \quad (1)$$

in which C = capacity, θ = degree scale reading and a and b are constants, "a" determining the "slope" $dC/d\theta$ of the curve (or $\tan \alpha$) and "b" determining the position of its intersection with the "C" ordinate as shown in Fig. 1.

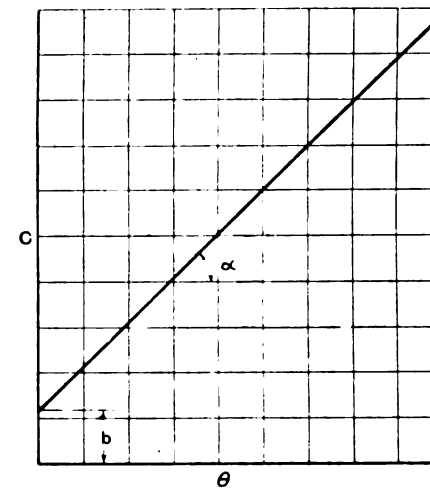

Fig. 1.

Actually, however, as is well known, the curve only obeys this straight line law between certain limits of capacity, such as those of θ=20 degrees and θ=160 degrees of Fig. 2. Outside these limits the curve bends owing to the absence of uniformity of field at the edges of both plate systems and to the 5 degrees cut-away portions of the moving plates in some makes of condensers.

If the capacity values of the condenser be measured at, say, 20 degrees and 160 degrees, a pair of simultaneous equations may be

Digitized by Google

formed, the solution of which will give the constants of the law to the curve so :—

When $\theta=20°$ $C=72\mu\mu F$
and when $\theta=160°$ $C=460\mu\mu F$
$\therefore\ 460=160a+b$
and $72=20a+b$
$388=140a$ $\therefore\ a=2.77$
and $b=72-55.4$
$=16.6\mu\mu F$

The complete equation to the capacity curve

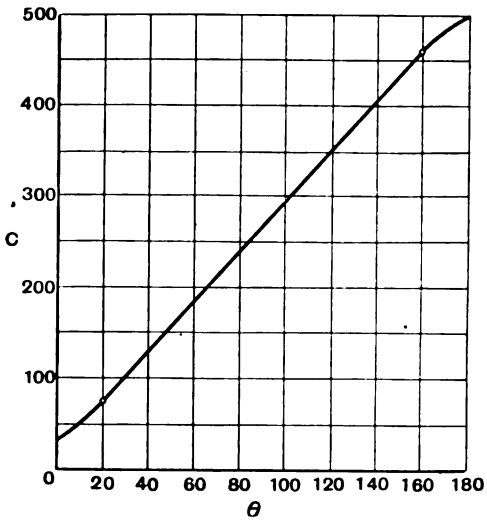

Fig. 2.

of Fig. 2 between the limits $\theta=20°$ and $\theta=160°$ is therefore

$$C=2.77\theta+16.6\mu\mu F$$

It will be observed that the two ends of the curve are bent to about the same extent ; this shows that the moving plates are symmetrically spaced relative to the fixed plates when the condenser is set at zero, as

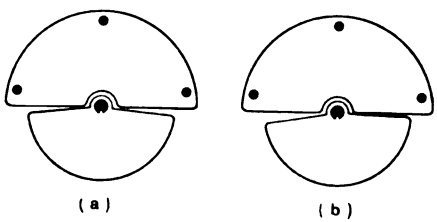

Fig. 3.

shown in Fig. 3 (*a*). If they were not symmetrically set as, for instance, is shown in Fig. 3 (*b*), the curve itself would also be unsymmetrical about the 90° point as shown in Fig. 4, with a consequent increase in the constant " *b* " of the curve and in the residual capacity value at 0°.

The reason for limiting the moving plates to about 170 degrees as shown in Fig. 3 is, of course, merely to effect a reduction of this residual minimum capacity value.

It has been stated above that each moving plate should rotate exactly midway between the pair of fixed plates with which it interleaves.

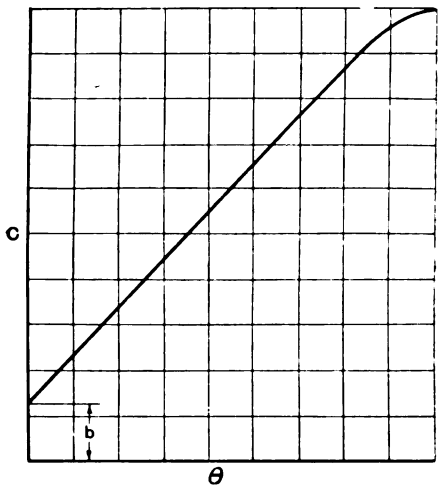

Fig. 4.

The reason for this is that since the *capacity* between the adjacent moving and fixed plates is connected with the *distance* between them by an inverse law, it follows that the percentage change of capacity (for a fixed scale setting) due to a given change of position of one bank of plates, axially relative to the other, will be a minimum when the distance between *all* adjacent plates is a maximum. This can only occur when the distances between all adjacent plates are

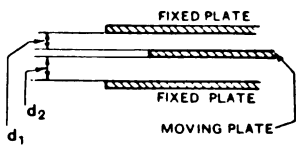

Fig. 5.

equal, and in this condition the capacity value of the condenser is, of course, a minimum for any given degree scale reading.

Let d_1 and d_2 be the distances of the

Digitized by Google

dielectric gaps shown in Fig. 5 then the capacity of the condenser is proportional to $1/d_1+1/d_2$.

$\therefore$ Capacity is proportional to d_1+d_2/d_1d_2, but d_1+d_2 is constant.

$\therefore$ Capacity is proportional to $1/d_1d_2$.

In order to show that this exact "mid setting" of plates is far from being unimportant, a curve (Fig. 6) has been plotted giving, for any *initial* percentage axial displacement of one set of plates from the correct "mid position," the percentage capacity variation of the condenser, for any fixed scale setting, when a given small axial displacement of one set of plates occurs due to some mechanical defect happening subsequent to calibration.

From a glance at this curve it will be seen that the calibration constancy of a variable condenser is very largely due to the careful equalisation of *all* the dielectric gaps. Further, it will be seen that the closeness with which a condenser follows its law of capacity variation also depends very largely upon this adjustment, since the effect of any want of parallel movement of the moving plates will be less evident after the gap equalisation has been effected.

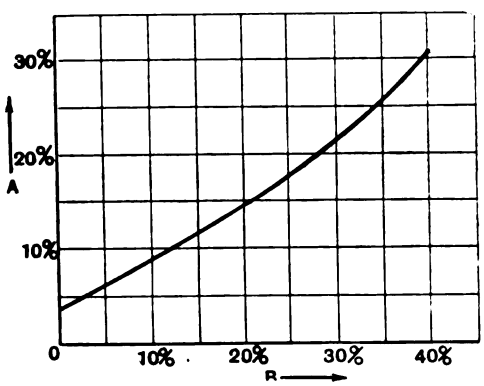

Fig. 6.

(A) *Percentage variation of capacity for a displacement of one set of plates axially relative to the other, equal to* 10% *of the two gaps* $d_1 \times d_2$.

(B) *Initial percentage displacement of one set of plates from the "mid position."*

If the capacity curve of a condenser is known to be a straight line between limits, then the law of the curve connecting its degree scale reading with its wave-length for any given inductance may be very simply found, as

$$\lambda = k_1\sqrt{C} \quad .. \quad .. \quad (2)$$

and $C = a\theta + b$ from (1),

whence $$\lambda = k_1\sqrt{a\theta + b} \quad .. \quad .. \quad (3)$$

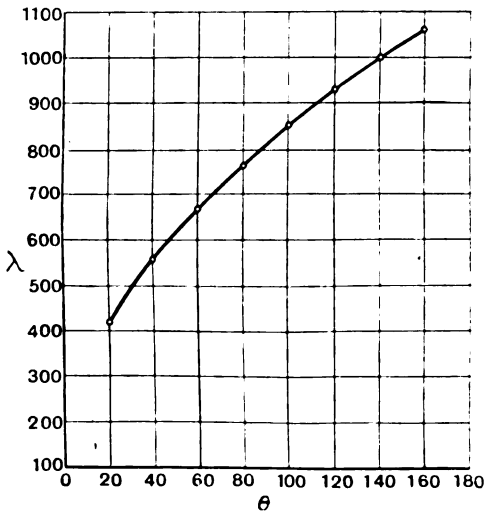

Fig. 7.

The constants "a" and "b" have already been found and if, for a given inductance, the constant k_1 (which is $1.885\sqrt{L}$) is assumed to be 50, then

$$\lambda = 50\sqrt{2.77\theta + 16.6} \text{ metres,}$$

and the curve to this equation can be plotted between the angular limits of the straight line law of capacity. This curve is shown in Fig. 7 and it should be noted that the distributed capacity of the inductance coil has been neglected in its calculation.

In passing it may be of some interest to note the best-known method of determining the distributed capacity of an inductance coil of an oscillatory circuit when plotting the wave-length curve of the latter.

As the wave-length of an oscillatory circuit is proportional to the square-root of the capacity, if, instead of plotting wave-length against capacity, the *square* of the wave-length be plotted against capacity, a straight line as shown in Fig. 8 will be obtained. If now the line be continued beyond the point where $C=O$ it will cut the axis of C at a point representing the *true* zero of capacity of the oscillatory circuit and

Digitized by Google

the distance "C_s" from this point to the zero of *added* capacity will be a measure of the distributed capacity of the inductance coil and circuit generally.

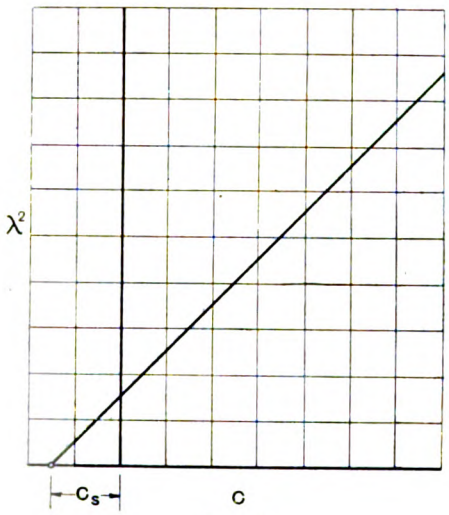

Fig. 8.

It should be noted that in this curve (Fig. 8), unlike all the previous curves, actual capacity values are plotted along the x axis, and *not* degree scale readings. The reason for this is obvious.

Variable condensers having semi-circular moving plates, although giving an even variation of capacity value, do not, of course,

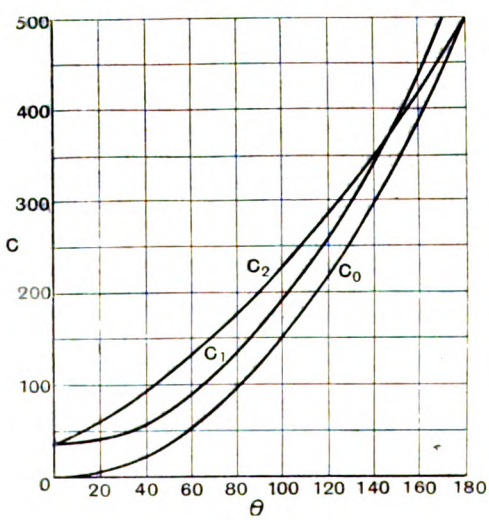

Fig. 9.

give even variations of wave-length value; and in view of this, condensers having "square law" shaped moving plates have been designed, in which attempts are made to make the curve plotted between wave-length and degree scale reading a straight line.

In such condensers the capacity value at any point of the scale should be proportional to the square of the degree scale reading.

As an example of method, the simple calculation for such a plate is given, though for reasons shown later it will not in practice fulfil its object.

If the residual (zero) capacity of a variable air condenser of this type, together with the distributed capacity of the inductance coil,

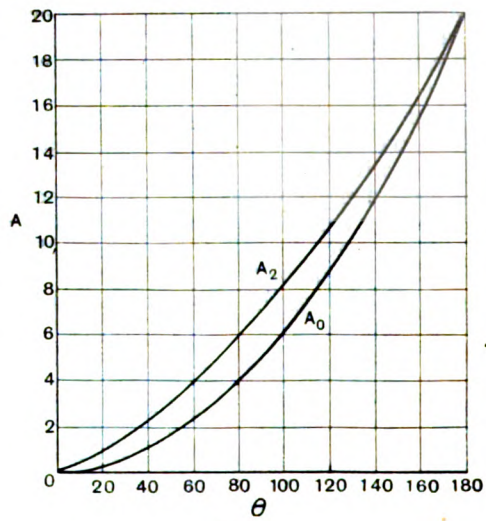

Fig. 10.

be neglected, the law connecting capacity and degree scale reading will be

$$C_0 = a\theta^2 \text{ (where a is a constant)} \quad .. \quad (4)$$

and if a condenser having a maximum value of $500\mu\mu F$ be taken as an example, when $\theta = 180°$ $C_0 = 500$

$$\therefore \quad a = \frac{C_0}{\theta^2} = \frac{500}{180^2} = 0.0154$$

and the equation to the capacity curve becomes

$$C_0 = 0.0154\theta^2 \mu\mu F.$$

This true "square law" curve is given as C_0 in Fig. 9, and to satisfy this square law of capacity increase with angular movement "θ" of moving plates, the area of moving plate "A_0" enclosed by the fixed plate

Digitized by Google

system at any angular position "θ" must be proportional to $0.0154\theta^2$.

$$\therefore\ A_0 = k_2(0.0154\theta^2)$$

and if the total area of the moving plate is assumed to be 20 square centimetres, then $A_0 = 20$ when $\theta = 180$

$$\therefore\ k_2 = \frac{20}{0.0154 \times 180^2} = 0.0399$$

and the law becomes

$$A_0 = 0.0399 \times 0.0154\theta^2$$
$$= 0.000615\theta^2 \text{ square centimetres.}$$

This curve of plate area plotted against degree scale reading is given as A_0 in Fig. 10, and the shape of plate given in Fig. 11 satisfies this curve.

The radius of this plate at any given angular position θ may be found in the following manner :—

For small angular increments $\delta\theta$ (Fig. 11) the incremental areas may be regarded as sectors of circles of radius R, and as the area of a sector of a circle is

$$\frac{\alpha}{2 \times 57.3} \cdot R^2, \quad [\text{Radian} = 57.3 \text{ degrees}]$$

the shaded area $\delta A_0 = \dfrac{\delta\theta}{2 \times 57.3} R_0^2$.

From this

$$R_0 = \sqrt{\frac{114.6\ \delta A_0}{\delta\theta}}$$

and by making the angular increments $\delta\theta$ infinitely small the exact value of R_0 is obtained

$$R_0 = \sqrt{114.6 \frac{dA_0}{d\theta}} \quad \ldots \quad \ldots \quad (5)$$

and from $A_0 = 0.000615\theta^2$

$$\frac{dA_0}{d\theta} = 0.001\,23\theta$$

$$\therefore\ R_0 = \sqrt{114.6 \times 0.001\,23\theta}$$
$$= 0.376\sqrt{\theta} \text{ cms.}$$

The radii at various angles given in the following tabulation may, from this formula, be very rapidly computed, and from them the shape of the plate drawn as in Fig. 12*a*.

It should be noted that in the above formulæ for the plate area and shape no account has been taken of the semi-circular non-active centre portion of the plate.

Apart from this, such a true "square law" plate shape is of very little use, for it only gives a "square law" capacity curve (C_0 of Fig. 9), if the residual capacity of the condenser is neglected. A reasonable value for this residual capacity (*i.e.*, the capacity at 0^0), as augmented by that of the leads together with the distributed capacity of the inductance coil, would be about $36\mu\mu$F, and so the curve C_0 of Fig. 9

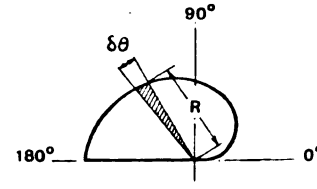

Fig. 11.

must be displaced upwards by this amount, giving the new curve of actual resultant capacity C_1 at any degree scale reading of the condenser when using plates shaped to the area curve A_0 Fig. 10 [$R_0 = 0.376\theta^{\frac{1}{2}}$]. This new curve, it will be seen, no longer gives a "square law" variation of capacity, and will therefore not satisfy the conditions for giving the straight line law of wave-length which it was required to obtain.

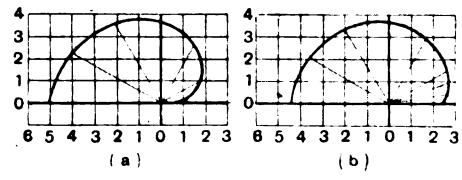

Fig. 12(*a*). $R_0 = 0.376\theta^{\frac{1}{2}}$.

Fig. 12(*b*). $R_2 = \left[114.6\left(2ka_2(a_2\theta + b_2) + K\right)\right]^{\frac{1}{2}}$

Stated simply, the rate of increase of capacity is too great over the last quarter of the scale (tuning will be too critical) and not great enough over the first quarter of the scale (tuning will be very open).

In order to correct for this error a new law must be formed to take account of this all-important residual capacity.

θ degrees ..	0	1	2	5	10	20	30	60	90	120	150	180
R_0 centimetres ..	0	0.38	0.53	0.84	1.19	1.68	2.06	2.91	3.57	4.12	4.60	5.05

Digitized by Google

Corrected Square Law Plate.

In order that the wave-length variation with angular rotation of the condenser shall be uniform (*i.e.*, that $d\lambda/d\theta$ shall be constant), λ must be proportional to $a\theta+b$, and as $\lambda \propto \sqrt{C}$, it follows that C must be proportional to $(a\theta+b)^2$. Therefore

$$C=(a_2\theta+b_2)^2 \quad .. \quad (6)$$

where a_2 and b_2 are constants depending upon the maximum and augmented residual capacities of the condenser.

When $\theta=O$, C must obviously equal the residual capacity, and so

$$\text{Residual capacity}=b_2^2$$

from which the constant

$$b_2=\sqrt{\text{Residual capacity.}}$$

And when $\theta=180$, C must be the maximum capacity of the condenser.

$$\text{Max. cap.}=(180a_2+\sqrt{\text{Residual cap.}})^2,$$

from which the constant

$$a_2=\frac{\sqrt{\text{Max. capacity}}-\sqrt{\text{Residual capacity}}}{180} \quad (7)$$

For any desired values of maximum capacity and residual capacity therefore, the capacity at any scale position can be directly calculated from equation (6).

C is, of course, a composite capacity consisting of the residual capacity plus that due to actual plate area in operation, and the part due to the actual operative plate area is naturally equal to $C-$Residual capacity.

The plate area in operation at any degree scale reading θ will therefore have to be proportional to $C-$residual capacity.

Therefore from equation (6) the area of plate at any angle θ will be given by

$$A_2=k\{(a_2\theta+b_2)^2-\text{Residual capacity}\} \quad (8)$$

where k is a constant depending upon the total plate area. This, however, neglects to take account of that semi-circular portion of the moving plate which is rendered inoperative by the cut-away portion of the fixed plates round the spindle of the condenser. A term may be added to compensate for this error.

The inoperative area is always a sector of a circle of radius "r," and is

$$\frac{\theta}{2\times 57.3}\cdot r^2$$

and this may be written $K\theta$ where the constant $K=r^2/114.6$.

The complete expression for plate area therefore becomes :—

$$A_2=k\{(a_2\theta+b_2)^2-\text{Residual cap.}\}+K\theta \quad (7)$$

When $\theta=180$, A_2 is, of course, the total plate area, and if this is given the value of the constant k may be found for—

$$\text{Total plate area}=k\{\text{max. cap.}-\text{Residual cap.}\}+180K$$

from which the constant

$$k=\frac{\text{Total plate area}-180K}{\text{Max. cap.}-\text{Residual cap.}} \quad .. \quad (10)$$

From (5) the radius R at any point of the plate is :—

$$R=\sqrt{114.6\frac{dA_2}{d\theta}}$$

And from (7)

$$A_2=k\{(a_2\theta+b_2)^2-\text{Residual cap.}\}+K\theta$$
$$=k\{a_2^2\theta^2+2a_2b_2\theta+b_2^2-\text{Resid. cap.}\}+K\theta \quad (11)$$

Differentiating—

$$\frac{dA_2}{d\theta}=k(2a_2^2\theta+2a_2b_2)+K$$
$$=2ka_2(a_2\theta+b_2)+K \quad .. \quad (12)$$

Therefore the radius of the corrected square law plate at any angle θ is given by—

$$R_2=[114.6\{2ka_2(a_2\theta+b_2)+K\}]^{\frac{1}{2}} \quad .. \quad (13)$$

As an example a condenser having a maximum capacity of $500\mu\mu$F has been taken, and it has been assumed that, in the absence of more exact data, the residual capacity, augmented as previously explained, will be of the order of $36\mu\mu$F. The capacity curve for this condenser to equation (6) is given in Fig. 9 (C_2). The plate area curve to equation (9) is given in Fig. 10 (A_2), and the values of plate radius R_2 for various values of θ have been computed from equation (13) and are given in the following

θ degrees	0	5	10	20	30	60	90	120	150	180
R_2 centimetres	2.49	2.56	2.60	2.76	2.89	3.18	3.56	3.86	4.12	4.38

Digitized by Google

tabulation. As a basis for the dimensions of the plate a total plate area of 20 square centimetres has been taken for this example.

Figs. 12*b* and 13 show the shape of the plate drawn with these radii and it will be seen that it differs greatly from the "square law *area*" plate of Fig. 12*a*, although it will

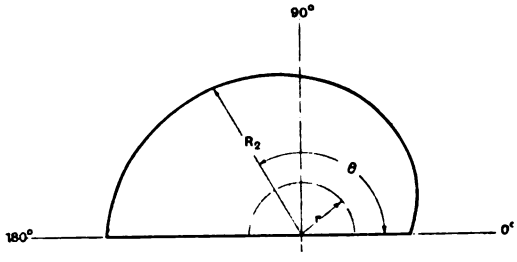

Fig. 13. $R_2\left[114.6\left\{2ka_2(a_2\theta+b_2)+K\right\}\right]^{\frac{1}{2}}$
(See also Figs. 16 and 19.)

give a true "square law *capacity*" change and a consequent *uniform scale of wave-length*.

It is of interest, perhaps, to note that the effect of ignoring the centre inoperative portion of the moving plate is to *decrease* the minimum radius from 2.49 cms. to 2.32 cms. and to *increase* the maximum radius from 4.38 cms. to 4.48 cms.

Fig. 14 shows curves of calculated wave-length ($\lambda = 50\sqrt{C}$) plotted against degree scale readings obtained by the use of plates of the three shapes discussed up to the present. The curve λ is obtained when semi-circular plates are employed, the curve λ_1 when plates of radii R_0 are employed and the curve λ_2 when plates of radii R_2 are used. The curve λ_2 is, of course, absolutely straight throughout its entire scale length whereas the curve λ_1 is far removed from this ideal.

If a variable condenser having plates shaped to give a straight line curve of wave-length is fitted with a single fine adjustment plate or "vernier," the evenness of its scale graduations, it should be noted, will depend upon the single plate being at its position of minimum capacity. If the single plate happens to be in a position of considerable capacity the wave-length curve will be bent slightly for the first few degrees of the scale. It should also be noted in connection with "vernier" plates that these should preferably be of semi-circular shape (irrespective of the shape of the plates of the main condenser unit) in order to obtain the same degree of fine tuning whatever the exact position of the single plate happens to be.

Inverse Square Law Plate.

Although the square law plate shape facilitates the "tuning-in" of stations whose wave-lengths are known and renders less critical the tuning adjustments at the lower capacity end of the scale, it is obviously not the *ideal* plate shape that should be used for C.W. work. Beat notes are governed by frequency difference. In order to obtain tuning adjustments equally critical as regards "chirp" at all parts of a tuning condenser scale, the latter should be evenly divided in *frequency* and should have a plate shape designed to give this "straight line law" of frequency variation with degree scale reading. In this case the heterodyne beat note range (*i.e.*, angular movement of the condenser scale required to vary the note of heterodyning with a station of constant wave-length from, say, 1 000 cycles per second through exact synchronism to 1 000 cycles per second on the opposite side of synchronism), will be constant for all scale readings. It should be noted also, in passing, that *frequency* tuning would facilitate supersonic

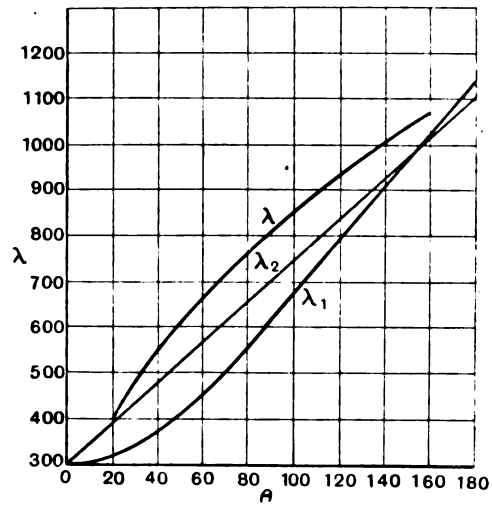

Fig. 14.

heterodyning, where constant *frequency* differences between receiver and local oscillator are required.

To proceed with the design of this uniform frequency change condenser plate, since

Digitized by Google

frequency is inversely proportional to wave-length, *i.e.*,

$$f = \frac{3 \times 10^8}{k_1\sqrt{C}}$$

then in order to obtain a straight line law between frequency and degree scale reading it is at once apparent that the capacity of the condenser must vary inversely as the square of the degree scale reading. The equation to the capacity curve must be :—

$$C_3 = \frac{1}{(a_3\theta + b_3)^2} \quad \ldots \quad \ldots \quad (14)$$

where a_3 and b_3 are constants depending upon the maximum and residual capacity values of the condenser.

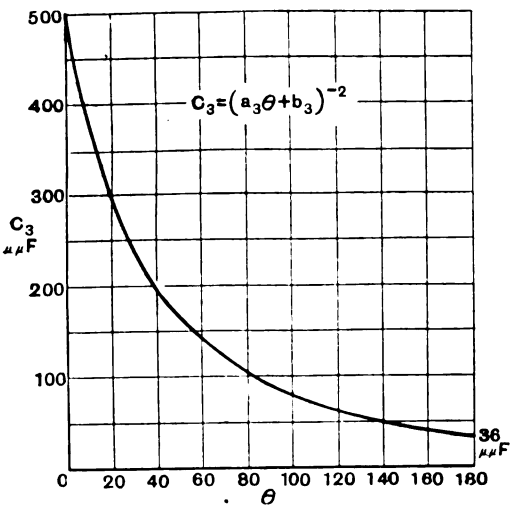

Fig. 15 (See also Fig. 9).

If the maximum capacity is known and the residual capacity is estimated, the values of these constants may be found.

When $\theta=O$, C_3 must be the maximum capacity and so

$$\text{Maximum capacity} = \frac{1}{b_3^2}$$

from which the value of the constant b_3 is

$$\sqrt{\frac{1}{\text{Max. cap.}}}$$

and when $\theta=180$, C_3 must be the value of the residual capacity.

$$\therefore \text{Residual cap.} = \frac{1}{(180a_3 + b_3)^2}$$

from which

$$a_3 = \frac{1}{180}\left\{\frac{1}{\sqrt{\text{Residual cap.}}} - b_3\right\}$$

The part of the capacity C_3 due to actual plate area is C_3— Residual Capacity, and the plate area in operation at any degree scale reading θ must therefore be proportional to this value ; that is to say :—

$$A_3 = k\left\{\frac{1}{(a_3\theta + b_3)^2} - \text{Residual Cap.}\right\} \quad (15)$$

But, to be exact, a term must be added as before to account for the semi-circular centre portion of the plate which is rendered in-operative, and this will involve the constant K, the value of which was determined for equation (9), the term itself in this case obviously being $K(108—\theta)$, and the complete area expression becomes :—

$$A_3 = k\left\{\frac{1}{(a_3\theta + b_3)^2} - \text{Residual cap.}\right\} + K(180 - \theta) \quad (16)$$

and for any given total plate area the value of the only remaining unknown, the constant k, can be determined. It is easily seen that this has the same value as in equation (10), in fact the values of k and K are unaffected by the law of the plate, and from (16)

$$\frac{dA_3}{d\theta} = -\left[\frac{2ka_3}{x^3} + K\right] \text{ where } x = a_3\theta + b_3 \quad (17)$$

Therefore :—

$$R_3 = \left[114.6\left\{\frac{2ka_3}{(a_3\theta + b_3)^3} + K\right\}\right]^{\frac{1}{2}} \quad \ldots \quad (18)$$

The minus sign obtained when differentiating merely indicates that the area is decreasing with increasing values of θ and can be ignored in forming the expression for R_3.

As an example, in the design of a plate to this law, a condenser to give a uniform scale of frequency and having the same values of maximum and residual capacities as those of the square law example has been worked out. In order to facilitate comparison also, the total plate area has been made the same as that of the square law example. The data therefore are as follows :—

Max. cap. 500$\mu\mu$F.
Augmented residual cap. 36$\mu\mu$F.
Total plate area (at $\theta=O$) 20 square cms.

Digitized by Google

The curve of Fig. 15 has been plotted for this condenser the capacity values being obtained by the use of the equation (14).

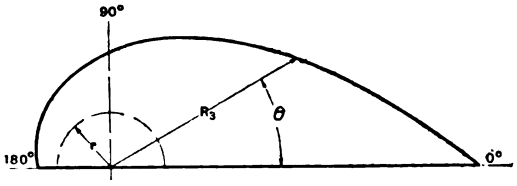

Fig. 16. $R_3 = \left[114.6\left\{\frac{2ka_3}{(a_3\theta+b_3)^3}+K\right\}\right]^{\frac{1}{2}}$

(See also Figs. 13 and 19.)

The values of plate radius R_3 for various angles θ (tabulated below) have been computed from formula (18), and Fig. 16 is a scale drawing of the plate shape constructed to these values.

$\theta°$	R_3 cms.
0	8.25
10	6.70
20	5.62
30	4.80
40	4.17
60	3.32
80	2.75
100	2.37
120	2.10
140	1.90
160	1.76
180	1.65

Fig. 17 shows the variation of frequency with degree scale reading when using this condenser in conjunction with an inductance of a value such that

$f = \frac{3 \times 10^8}{50\sqrt{C_3}}$ in order to keep the example easily comparable with that of the previously designed square law plate.

Exponential Law Plate.

There is yet another condenser law which is extremely useful in radio work for all purposes except where autodyne reception is used (for which the previous type is the best); the "exponential" or "compound interest" law.

When using a variable condenser having plates formed to suit this law in an oscillatory circuit, the same *percentage* detuning will be obtained for equal degree scale movements at all positions of the scale. That is to say, the rate of change of wave-length (or frequency) at any setting of the condenser will be proportional to the wave-length to which that setting corresponds.

$\frac{d\lambda}{d\theta}$ must be proportional to λ

or $\frac{d\lambda}{d\theta} = b\lambda$ where b is a constant.

The law which satisfies this condition is, of course, the exponential law.

$$\lambda = a\varepsilon^{b\theta} \quad .. \quad .. \quad (19)$$

At the suggestion of the Editors the present article is being extended to cover the design of a plate to give this law connecting wave-length and degree scale reading.

Since the wave-length corresponding to any condenser setting θ is given by

$$\lambda = a\varepsilon^{b\theta}$$

and $$\lambda = k_1\sqrt{C}$$

then $$k_1\sqrt{C} = a\varepsilon^{b\theta}$$

or $$C = \frac{1}{k_1^2}\left(a\varepsilon^{b\theta}\right)^2 = \frac{1}{k_1^2}a^2\varepsilon^{2b\theta}$$

The equation to the capacity curve of this condenser must therefore be

$$C = a_4\varepsilon^{b_4\theta} \quad .. \quad .. \quad .. \quad .. \quad (20)$$

where a_4 and b_4 are constants depending upon the maximum and residual capacity values of the condenser. It should be noted here that $b_4 = 2b$, as the constant b of equation (19) will be useful later.

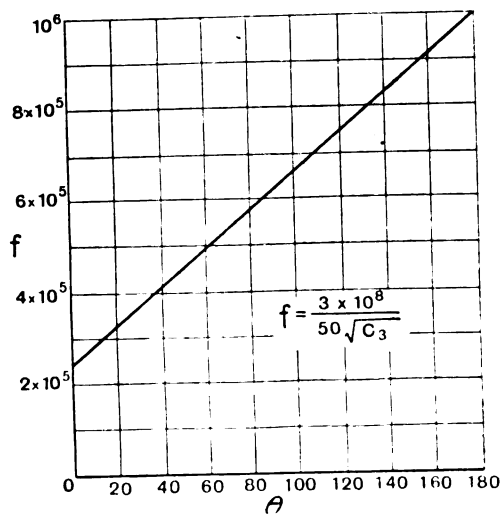

Fig. 17. (See also Fig. 14.)

The values of these constants are very easily determined from the values of maximum and residual capacity, because when $\theta = O$,

$\varepsilon^{b_4\theta}$ becomes unity and so the constant a_4

Digitized by Google

is the effective (augmented) residual capacity of the condenser.

Also, when $\theta=180$, C_4 must be the value of the maximum capacity of the condenser and so :—

$$\text{Max. cap.} = (\text{Residual cap.})\epsilon^{180b_4}$$

Equating logarithms :—

$$\log\ (\text{max. cap.}) = \log\ (\text{residual cap.}) + (180b_4 \log_{10}\epsilon)$$

from which

$$b_4 = \frac{\log\ (\text{max. cap.}) - \log\ (\text{residual cap.})}{78.174} \qquad (21)$$

As in the previous examples the part of the capacity at any angle due to actual operative plate area is

$$C_4 - \text{residual cap.},$$

and the operative plate area for any condenser setting must therefore be

$$A_4 = k\left(a_4\epsilon^{b_4\theta} - \text{residual cap.}\right) \quad .. \quad (22)$$

but the term $K\theta$ must be added to this expression to compensate for the loss of area round the condenser spindle, the complete area expression becoming :—

$$A_4 = k\left\{a_4\epsilon^{b_4\theta} - \text{Residual cap.}\right\} + K\theta \qquad (23)$$

The values of the constants K and k can be determined from a knowledge of the total plate area and the radius of the centre cut-away portion of the fixed plates round the spindle ; in terms of these dimensions they will be exactly as determined for equation (9) for the plate area of the square law plate.

As the radius of the plate at any angle θ is given, as in the previous examples, by :—

$$R_4 = \sqrt{114.6\ \frac{dA_4}{d\theta}}$$

the expression for plate area (13) must be differentiated, which gives

$$\therefore\ \frac{dA_4}{d\theta} = ka_4b_4\epsilon^{b_4\theta} + K \quad .. \quad (24)$$

The plate radius is therefore given by

$$R_4 = \left[114.6\ \left\{ka_4b_4\epsilon^{b_4\theta} + K\right\}\right]^{\frac{1}{2}} \quad .. \quad (25)$$

Values of capacity and plate radius for a condenser of the same value and total plate area as assumed in the other examples have been computed from these formulæ, and the results given in the capacity curve of Fig. 18 and the plate shape drawing of Fig. 19.

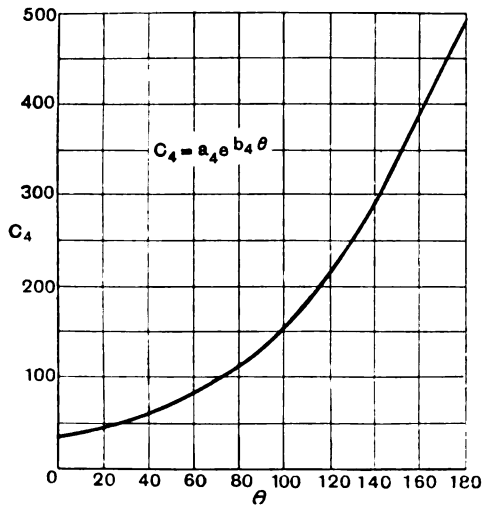

Fig. 18.

These two figures should be compared with the corresponding figures for the "square law" and "inverse square law" plates. The following tabulation gives the values of plate radius R_4 for various angles θ.

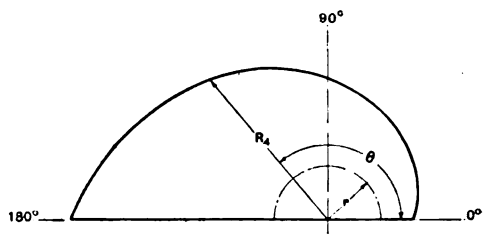

Fig. 19. $R_4 = \left[114.6\left(ka_4b_4\epsilon^{b_4\theta} + k\right)\right]^{\frac{1}{2}}$

(See also Figs. 13 and 16.)

Fig. 20 gives the wave-length curve obtained with the condenser of this example

θ deg.	0	10	20	30	40	60	80	100	120	140	150	160	170	180
R_4 cms.	1.93	2.02	2.13	2.24	2.36	2.64	2.98	3.38	3.85	4.40	4.71	5.04	5.40	5.80

Digitized by Google

and from it will be seen that a given angular movement of the condenser will give the same percentage change in wave-length at all points of the scale.

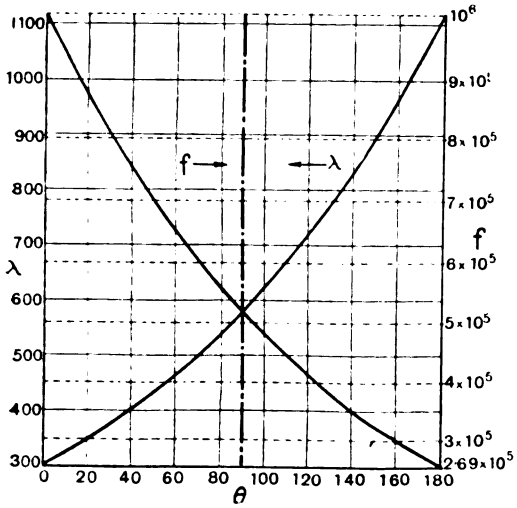

Fig. 20.

Moreover, it will be observed that the frequency curve, plotted in the same figure, follows the same law and that the two curves are perfectly symmetrical about the centre of the scale ($\theta=90°$). This fact is peculiar to the exponential law condenser and may be explained as under :—

$$\lambda = a\varepsilon^{b\theta}$$

and $$\frac{d\lambda}{d\theta} = ab\varepsilon^{b\theta} = \underline{\underline{b\lambda}}$$

but $$f = 3\times 10^8\left(\frac{1}{\lambda}\right) = 3\times 10^8\left(\frac{1}{a\varepsilon^{b\theta}}\right)$$

$$= 3\times 10^8\left(\frac{1}{a}\cdot\varepsilon^{-b\theta}\right)$$

and $$\frac{df}{d\theta} = 3\times 10^9\left(-\frac{b}{a}\cdot\varepsilon^{-b\theta}\right)$$

$$= -b\left\{3\times 10^9\left(\frac{1}{a\varepsilon^{b\theta}}\right)\right\}$$

$$= \underline{\underline{-bf}}$$

$$\therefore \quad \frac{d\lambda}{d\theta}\cdot\frac{1}{\lambda} = -\frac{df}{d\theta}\cdot\frac{1}{f}$$

Showing that the percentage change of *wave-length* per degree of movement is exactly equal to the percentage change of *frequency* per degree and this percentage is a constant characteristic of the condenser, remaining the same whatever the value of the associated inductance (provided that the value of its distributed capacity has not varied greatly from that of the inductance for which the condenser was designed). The value of this percentage change is, of course, simply $100b$ and the constant b has already been seen to be equal to $\frac{b_4}{2}$.

The value of the constant b_4 was determined for the equation (20) to the capacity curve and is

$$b_4 = \frac{\log\text{ (max. cap.)} - \log\text{ (residual cap.)}}{78.174}$$

and so the percentage change in wave-length *or* frequency per degree is given by

$$100b = \frac{\log\text{ (max. cap.)} - \log\text{ (residual cap.)}}{1.56348} \qquad (26)$$

The percentage of wave-length change in the case of the example given here is 0.7315% per degree (Fig. 20).

There is no need to remind the reader of the advantages of a condenser giving this law of wave-length variation in cases of tests and comparisons requiring equal percentages of detuning from exact resonance and these notes would not have been complete without its inclusion.

Conclusion.

In conclusion it is thought that a summary of the formulæ and their constants will prove useful and these have therefore been tabulated on the next page in a form which facilitates comparisons of the three chief laws. This tabulation is headed by true scale drawings of the plate shapes and their capacity curves and it should be noted that the three plates have the same total area.

It is hoped that this table will prove useful as a reference guide since it provides in a condensed and convenient form the information required by those concerned in condenser design.

Digitized by Google

TABLE GIVING A SUMMARY OF FORMULÆ AND THEIR CONSTANTS.

PLATE DESIGN FOR CONSTANT WAVE-LENGTH CHANGE.

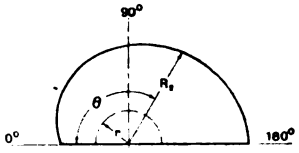

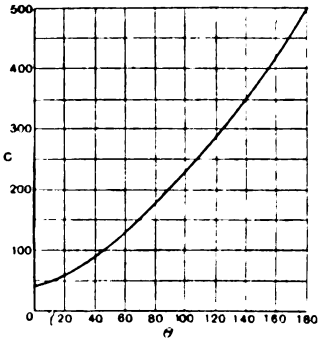

$$C_2 = (a_2\theta + b_2)^2$$

$$A_2 = k\left\{a(a_2\theta + b_2)^2 - \frac{\text{Residual}}{\text{Capacity}}\right\} + K\theta$$

$$R_2 = \left[114.6\left\{2ka_2(a_2\theta + b_2) + K\right\}\right]^{\frac{1}{2}}$$

Constants—

$$a_2 = \frac{\sqrt{\text{Max. Cap.}} - \sqrt{\text{Residual Cap.}}}{180}$$

$$b_2 = \sqrt{\text{Residual Capacity}}$$

PLATE DESIGN FOR CONSTANT FREQUENCY CHANGE.

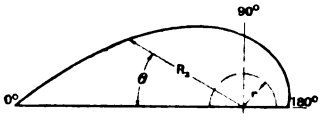

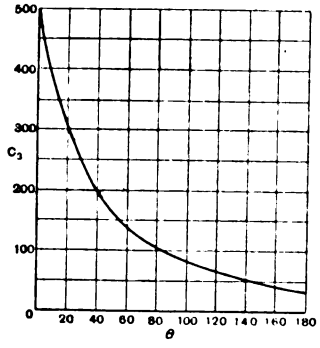

$$C_3 = \frac{1}{(a_1\theta + b_1)^2}$$

$$A_3 = k\left\{\frac{1}{(a_3\theta + b_3)^2} - \frac{\text{Residual}}{\text{Capacity}}\right\} + K\,(180 - \theta)$$

$$R_3 = \left[114.6\left\{\frac{2ka_3}{(a_3\theta + b_3)^3} + K\right\}\right]^{\frac{1}{2}}$$

Constants—

$$a_3 = \frac{1}{180}\left\{\frac{1}{\sqrt{\text{Residual Capacity}}} - b_3\right\}$$

$$b_3 = \frac{1}{\sqrt{\text{Max. Capacity}}}$$

PLATE DESIGN FOR CONSTANT PERCENTAGE CHANGE OF WAVE-LENGTH OR FREQUENCY.

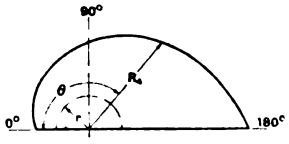

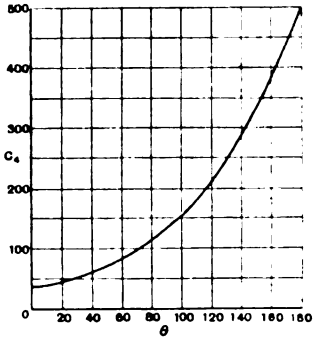

$$C_4 = a_4\varepsilon^{b_4\theta}$$

$$A_4 = k\left\{a_4\varepsilon^{b_4\theta} - \text{Residual Cap.}\right\} + K\theta$$

$$R_4 = \left[114.6\left\{ka_4b_4\varepsilon^{b_4\theta} + K\right\}\right]^{\frac{1}{2}}$$

Constants—

$$a_4 = \text{Residual Capacity}$$

$$b_4 = \frac{\log(\text{Max. Cap.}) - \log(\text{Residual Cap.})}{78.174}$$

OMMON CONSTANTS—

$$k = \frac{\text{Total Plate Area} - 180K}{\text{Max. Capacity} - \text{Residual Capacity.}}$$

$$K = \frac{\pi^2}{114.6}$$

Digitized by Google

The Performance of Amplifiers.

[R342

Paper read by Mr. H. A. THOMAS, M.Sc., before the Wireless Section, I.E.E., on 2nd December, 1925.

Abstract.

THE paper describes work carried out for the Radio Research Board at the National Physical Laboratory.

In an introduction the term "amplifier" is specified as being applied only to a combination of components fulfilling the purpose of pure H.F. or of L.F. amplification, while an "amplification system" can be of any of the combinations: (A) H.F. with detector, (B) detector and L.F., (C) H.F., detector and L.F. stages. The performance of an amplifier must be expressed in terms of: (1) its voltage amplification, (2) its effect upon the circuit to which it is connected, (3) its distortion of wave-form. These properties are intimately related, but the amount of experimental work carried out has been insufficient for an attempt to correlate any one property with any other.

SECTION 1.

The Measurement of Voltage Amplification.

This section opens with a discussion of practical difficulties, pointing out, *inter alia*, that the determination of the amplification is of value only when the E.M.Fs. and currents are of the same order as those encountered in practical operation.

Next is described the method employed by the author in making the measurements described in the paper. The outline of the apparatus is shown in Fig. 1.*

The actual measuring instrument was a vibration galvanometer, in connection with a current transformer joined to a measuring valve. The input E.M.F. was derived from a step-down H.F. current transformer of the Dye pattern. To operate the vibration galvanometer this transformer output to the amplifier was modulated at 1 000 cycles. The condition of complete modulation was determined by the auxiliary crystal circuit shown. On over-modulation, a second harmonic is easily detectable in the telephones, the point where it just vanishes being that of complete modulation. Fig. 3 (not reproduced) illustrates the somewhat extensive switching system used to enable check of calibration, etc., and to apply the audio source alone as input for L.F. amplification measurements. In discussing the results obtained, curves of voltage amplification against wave-length are shown; additional curves obtained since the original paper was written were also illustrated by slides at the meeting. In the curves for two apparently identical H.F. amplifiers, transformer coupled, very different amplitudes are noticeable, the factor per stage in one case actually exceeding that of the valves, due to reaction effects which were increasing while in the other case they were decreasing

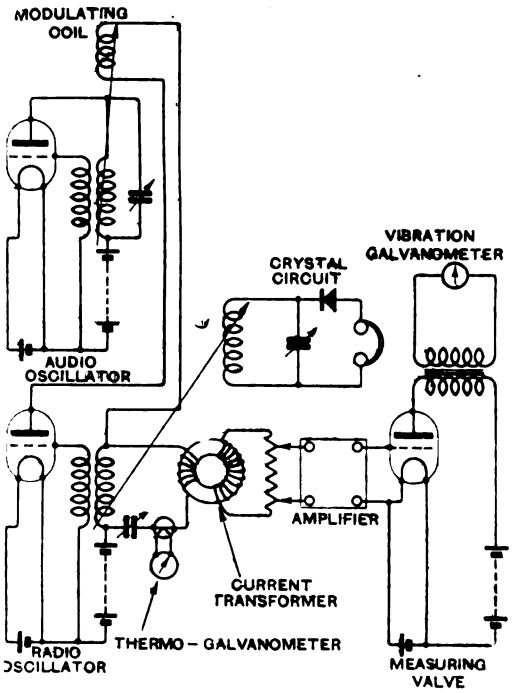

Fig. 1.

* The author's original figure-numbers are used throughout this abstract.

Digitized by Google

the overall amplification. A curve for a 6-stage resistance capacity amplifier shows the known inferiority of this arrangement at shorter wave-lengths. As regards L.F. amplifiers, it is stated that several standard amplifiers were tested at 1 000 cycles, and it was found that the overall amplification of several cascade stages was less than the product of the individual stages. A special 2-stage amplifier was made up with mercury cups and links to permit ready change to either or both stages. Taken separately, the stages gave 21.9 and 19.65 respectively, these becoming 22.2 and 19.2 on cascading, or 426 for the two stages as against 433, the product of their two separated values. The gain of 1 per cent. on the first stage is attributed to reaction effects back to a weak input, the loss of 2 per cent. on the second stage to the input being no longer sinusoidal. The effect of H.T. condenser and of separate batteries is also discussed, it being stated that separate L.T. batteries produce an increase of 4 per cent.

SECTION 2.

The Input Impedance of an Amplifier.

It is first pointed out that the effect of the amplifier upon the tuned input circuit is twofold :—

(A) To increase or decrease its effective resistance, due to power taken from (or delivered to) this circuit by the amplifier.

(B) To alter the tuning of the circuit due to the shunt capacity of the input circuit of the amplifier.

After discussing the difficulties of alternative systems of H.F. measurement, the use of a resonance method is described. The test circuit was kept constant and the input frequency varied, the supply oscillator being carefully calibrated and its variable condenser controlled from a distance of several feet. Expressions are given for calculation of decrement, and curves of decrement against wave-length are shown for three different values of tuned cir uit inductance 126 H, 654μH and 1930μH. Each curve shows the decrement for several different settings of reaction control, those for the 126μH coil revealing a hump about 505 metres, due, it is stated, to absorption at the natural wave-length of a very loosely-

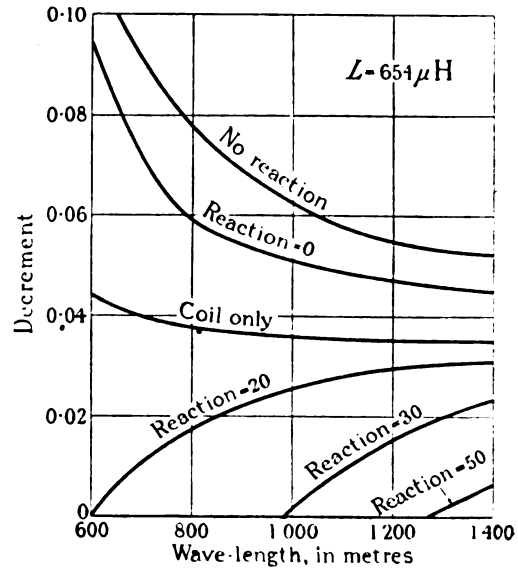

Fig. 9.

coupled aerial tuning coil which formed part of the tuner panel. The decrement of the tuned circuit alone is also shown, this having been separately determined, without the amplifier. From these curves the total effective resistance of the circuit was determined, and illustrated by curves, from which in turn the effective added resistance

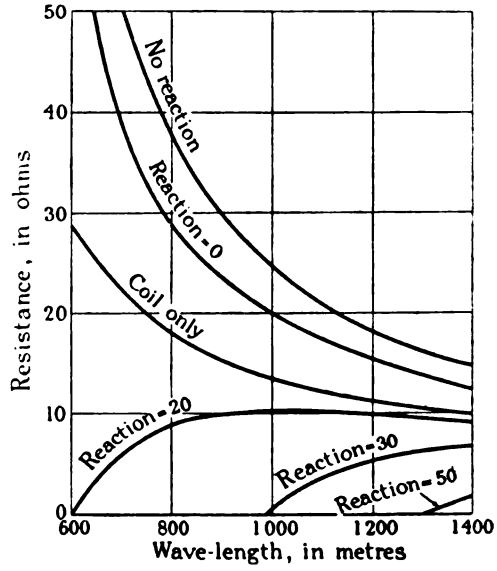

Fig. 12.

Digitized by Google

(positive or negative) due to the amplifier was ascertained. Typical curves are shown (for the 654μH coil) in Figs. 9, 12 and 15.

A theoretical treatment of these results follows. The load due to the amplifier is shown to be equivalent to a series resistance and capacity joined across the tuned circuit condenser. From a vector diagram expressions are derived for the calculation of the added resistance, tables showing theoretical and experimental values in good agreement. It is concluded that the capacity term of the amplifier load remains constant at all frequencies and values of tuning inductance, while the resistance term differs for various values of L as follows :—

L. μH.	R. ohms.
126	20 800
654	87 600
1 930	249 000

The vectorial treatment is then expanded to meet the case of reaction, and it is shown that this can be expressed in terms of the known theoretical conditions, *i.e.*, the electrical constants of the anode circuit and its mutual inductance to the input.

SECTION 3.

Distortion in Audio-Frequency Amplifiers.

It is stated that error in measurement of amplification is likely if the wave form departs from sinusoidal (as was mentioned in Section 1, in connection with the two stage L.F. amplifier). The vibration galvanometer measures the amplification of the fundamental, while an R.M.S. measurement includes the energy in harmonics that may be present. For this, and other reasons stated, it was necessary to establish the type of wave given by an amplifier under various conditions with a sinusoidal input. (The input was photographically verified to be of sinusoidal purity.) The former 2-stage amplifier was used, but distortion was found to be so great that one transformer only was used, while the author emphasised that the transformer was of the best possible make. Wave-forms at between 130 and 300 cycles were obtained with an Einthoven galvanometer and high-

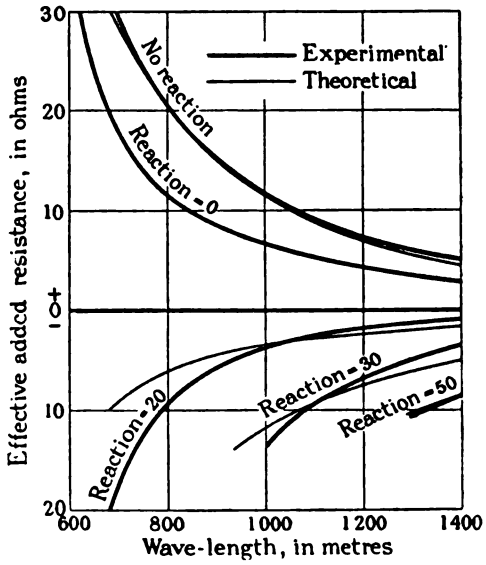

Fig. 15.

speed paper camera. For the higher frequency of 1 000 cycles (as used in the amplification determinations), a cathode ray oscillograph was employed. The exciting source was also used to supply the time scale to the oscillograph, the resultant Lissajou figures being photographically recorded on bromide paper and analysed into simple wave-form figures. The most important curves of wave-form at both 130 and 1 000 cycles are illustrated, and details of the Fourier analysis of the forms illustrated are given in a table.

Many of the forms show severe distortion due to harmonics, even with —4 volts grid bias, although it is stated that with —2 or —4 volts grid bias the output was never great enough to give a grid current. Although more experimental work is still necessary to confirm the general conclusions so far obtained, these can be stated. (i.) Increasing output modifies wave-form seriously. In general harmonics increase in magnitude far more rapidly than the fundamental. (ii.) As frequency is lowered, distortion becomes much more serious. At 150 cycles the fundamental may be almost completely eclipsed. (iii.) The effect of negative grid bias is to reduce the magnitude of the second and third harmonics and to introduce small harmonics of a higher order. From consideration of the ratios of the actual peak

Digitized by Google

to the peak of the fundamental component and to the peak of a pure sine wave of the same R.M.S. value, it is shown that there is a definite distortion leading to an error of 18 per cent. which apparently cannot be removed by reducing the signal amplitude. It is suggested that this is probably due to the normal D.C. anode current component in the transformer primary. The author finally concludes that the general observations point to peak values giving the chief measure of output sound effect upon the human ear, which may lead to modification in our measurements of signal intensity.

Discussion.

A lengthy discussion followed the reading of the paper. The discussion was opened by Prof. C. L. Fortescue, who thought that difficulty might arise from the extensive switching used (as stated in the paper) for check of calibration. He also doubted the efficiency of the screening arrangements described and questioned the amount of distortion quoted by the author.

Mr. L. B. Turner doubted the wisdom of the vibration galvanometer, which he agreed to be sound for L.F. measurements but not for H.F., for which purpose he expressed preference for a valve voltmeter (*e.g.*, Moullin). He also questioned the amount of distortion, which he attributed to grid current or to unsuitable voltages.

Mr. Willans contributed remarks which were rather by way of a separate communication than a criticism of the author's paper. He described a bridge method of measurement, which permitted determination of both amplification and phase. Two diagram slides were shown (with formulæ for calculation), and several result curves. At the end of the meeting Mr. Willans gave a demonstration of his method.

Mr. J. Hollingworth outlined the origin of the method described in the paper, and referred to the N.P.L's. need for a method of standardising amplifier measurements. The vibration galvanometer he regarded as the most suitable arrangement available, while admitting it was not perfect.

Major A. G. Lee dealt with the measurement of decrement, with relation to the determination of input impedance.

Col. Edgeworth spoke on distortion, suggesting that experiment was necessary to find out how much distortion was due to the transformer.

Mr. P. K. Turner dealt with H.F. measurement and input impedance. He also spoke of the distortion quoted in the paper, which he suggested might be due to inadequacy of valve characteristic.

Dr. R. L. Smith-Rose referred to the need for a method of testing the overall characteristics of a wireless receiver to bring such measurements into line with those which the N.P.L. already performed for other branches of industry.

The author briefly replied to the main points raised in the discussion. In particular, he defended the use of the vibration galvanometer, and pointed out that the switching arrangements were only in use for the measurement of amplification not for input impedance. The connections made were such that the grid and filament were always connected to the same points for all the tests. He also emphasised that in the cases of negative grid bias quoted, no grid current flowed to account for the distortion shown in his wave-form curves.

On the motion of the Chairman (Major B. Binyon), the author was cordially thanked for the paper.

Digitized by Google

Experimental Radio Station G2DX.

By W. K. Alford.

[R625

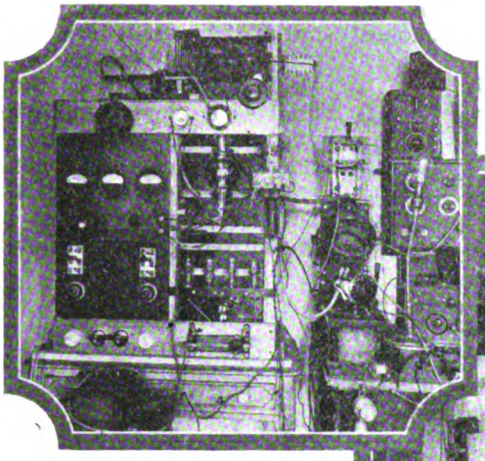

Fig. 1. *The 90-metre transmitter.*

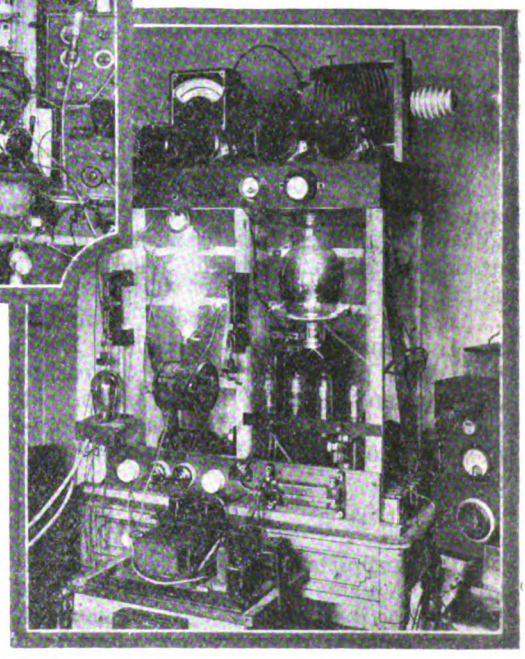

Fig. 2. *General view of the 35-metre transmitter.*

Short-wave Transmitting and Receiving Work.

THE earliest investigations of the possibilities of short-wave transmission were carried out by the writer in the winter of 1920-21, when the first of a series of transmitters was built and operated on a wave-length of 30 metres.

An exceedingly useful amount of data was obtained which has proved invaluable in later days, although, of course, it was not possible to collect any information on the signals from long-distance sources, as the Atlantic remained unconquered in the wireless sense at this date.

It is interesting to note that in these early experiments harmonic excitation of a large aerial was used and the receiver employed a single valve loosely coupled regenerative circuit much on the lines of the present arrangements. The greatest distance at which short-wave signals were observed was about 15 miles, and owing to their extreme weakness at this distance compared with 1 000 and 440 metre signals [*sic*], the opinion was formed that the utility of these short waves was confined to the laboratory. This is interesting and even humorous in the light of present events.

A non-technical description of the present receiver and various transmitters, which have been developed during the last twelve months, is appended, together with illustrations.

Power Supply for Transmitters.

Power for all purposes is derived from supply mains at 250 volts 50~ of particularly poor sine form. This is stepped up to 3 000 volts through a Zenith transformer for anode supply and stepped down to 30 and 15 volts by other transformers for filament lighting. Full-wave rectification of the high-tension output is obtained through the now famous Amrad "S" tubes—two in series operating on each side of the centre tap of the transformer. This is necessary owing to the unfortunate limitation of the tubes to 1 000 volts.

Digitized by Google

The rectified output is then smoothed by two Igranic I/C chokes of 2H in each lead and bridged by two condensers, banks of 13 and 4μF being connected across the input and output respectively of the chokes.

The 90-metre Transmitter.

This transmitter (shown in Fig. 1) has now been dismantled to make way for the 45-metre transmitter described later. It served a useful purpose in being the first transmitter built by the writer to enable communication to be maintained over distances of many thousands of miles.

It was originally of the simplest character, employing the well-known coupled Hartley form of oscillator, and delivered about 2 indicated amperes into an 8-wire cage antenna 70 ft. long working just below its fundamental wave-length.

The large valve is a Marconi-Osram T250 and the smaller one at the right a DET1, which later performed the feat of reaching Australia on an input of 66 watts. The inductances are wound with 6 S.W.G. copper wire and the various other items are easily recognisable.

The 45-metre Transmitter.

This transmitter evolved itself from the skeleton remains of the 90-metre transmitter described above. It employs the master oscillator circuit, which seems to be only little investigated by amateur workers. The circuit is given in Fig. 3, and a general view in Figs. 1 and 2.

The power amplifier is a Marconi-Osram T450A, the filament of which consumes 5 amperes at 17 volts; while the drive, or master, oscillator is a T250 of the same make. The inductances, other than that in the drive circuit, are wound with phosphor-bronze strip of heavy gauge, and the variable condensers tuning the various circuits are made by the Igranic Co., and are all mounted on plate glass—a feature of which the necessity was not fully realised until it was tried.

It may appear that the 250-watt valve, acting as the master oscillator, is unduly large but it seems that on these short wave-lengths plenty of "drive" is an absolute necessity.

The question of "blanking" stray H.F. currents at these frequencies by means of air-cored chokes cannot be overstressed. These chokes must be inserted in all filament leads and in the actual supply mains themselves.

A series of experiments is being carried out at the present time with this transmitter using crystal control of frequency. The DET1A valve seen at the right is actually used as a power amplifying stage for this purpose. Up to the time of writing considerable success and a great deal of interest have been derived from these experiments, but great difficulty has been encountered in controlling powers of over 50 watts input.

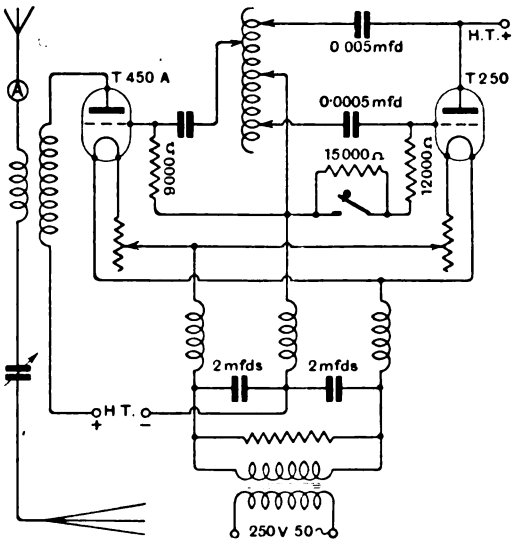

Fig. 3.
The circuit arrangement of the 45-metre transmitter.

It is hoped to give details of these experiments at a later date, when the matter has been more fully investigated.

No trouble has yet been experienced owing to the failure of valves at these high frequencies. It is, of course, essential in valves where the anode lead comes up from the pinch through a re-entrant tubular space to keep this lead well clear of the glass, and I believe that in certain professional circles an "electrostatic balancing ring" surrounds the top of the valve. This, being connected to the anode, avoids any serious concentration of the field, which is the chief factor causing puncturing of the glass of the valve.

The 20-metre Set.

A general view of the 23-metre transmitter

Digitized by Google

is shown in Fig. 4 and as will be seen is in a state of extreme experimental untidiness. At the time the photograph was taken work was being done on the application of the master oscillator to this wave-length, this valve being a DET1 and the amplifier a T250. The DET1 is rated at 40 watts and is too small to control the normal input to the T250; but in the case in point the power input to the amplifier was well under 100 watts.

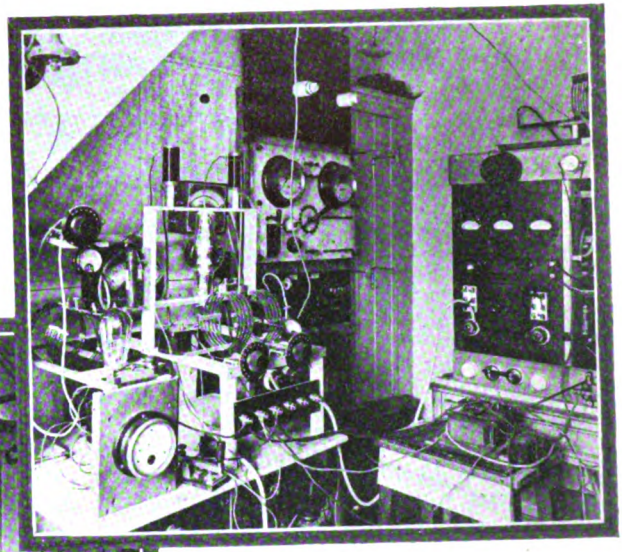

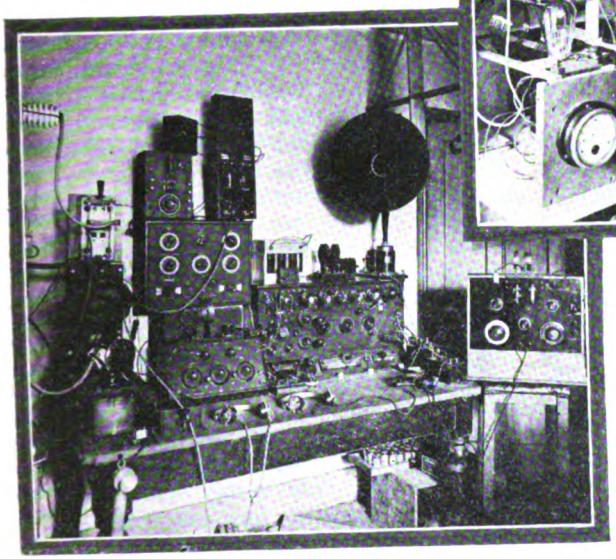

(*Above.*) Fig. 4. *The 23-metre transmitter.*
(*Left.*) Fig. 6. *The receivers at 2DX.*

Considerable interest was attached to a circuit attributed to Reinartz which functioned extremely well on this set using 12 ft. of copper tape above the set for an antenna and a similar length of heavy rubber-covered cable across the floor as a counterpoise.

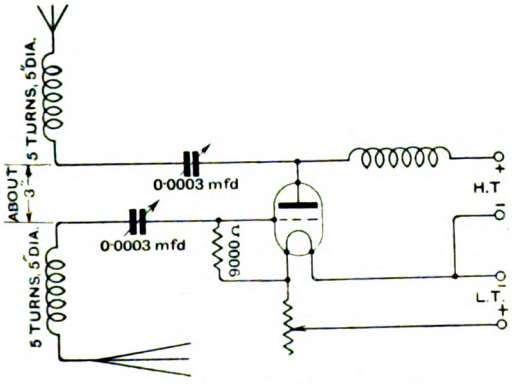

Fig. 5. *Circuit of 20-metre transmitter.*

The circuit is quite well known and is given in Fig. 5. It will be noticed that the circuit is simplicity itself, and it is interesting to observe that the inter-electrode capacity of the valve is used as a series antenna-counterpoise capacity.

This set gives an indicated antenna current of 2.2 amperes on 23 metres on the antenna described, and has been reported as giving good signals at 4 000 miles.

The Receiver.

A general view of the receiving equipment is shown in Fig. 6. The 2-valve instrument on the right was built when the difficulties of producing supersonic reception were encountered first and has a range of 5-70 metres. The main receiver is a 10-valve supersonic which now functions perfectly down to 17 metres and gives very remarkable results on the 20-40 metre range. Loud-speaker signals of great strength have been obtained from New Zealand using a 2 ft. loop of 2 turns. Such results are not at all exceptional and any supersonic will repeat them if patience is used to overcome the apparent unwillingness of the instrument to perform on the first trial.

Digitized by Google

Short Waves for Long Ranges: A Review.

By Capt. W. G. H. Miles, R.M. **[R401·24**

A Lecture delivered before the Radio Society of Great Britain on Wednesday, 25th November, 1925.

WHEN your Society honoured me with an invitation to lecture to-night, I had intended to give you some rambling reminiscences of the various uses to which wireless has been put in the Navy since the days of Trafalgar.

I was told however that you would prefer something more up to date.

I am therefore attempting to give a broad review of the progress made in the use of short waves for long range working since the war, together with an account of the reasons for their astonishing success.

I do not profess to be an expert on the subject, and speak subject to correction.

In his play, *Back to Methuselah*, Bernard Shaw says: "It's only the politicians who improve the world so gradually that nobody can see the improvement. The notion that Nature does not proceed by jumps is only one of the budget of plausible lies that we call classical education. Nature always proceeds by jumps."

If Nature proceeds by jumps, so does wireless. The progress of wireless may be divided into three eras: (1) The Spark Era; (2) The Valve Era; (3) The Short Wave Era.

In the first, the detecting apparatus—coherer, magnetic detector, crystal detector—was crude and insensitive.

In order to get the ranges required, spark transmitting plants of increasing power were installed, working on wave-lengths from 300m. upwards.

Such apparatus was wasteful of power, and caused much interference with similar installations trying to work on adjacent wave-lengths.

The second era dates from about 1914. The valve, invented by Fleming and developed by de Forest, Round, Langmuir, Lieben, Reiss, etc., worked a revolutionary change.

By its use one could employ more scientific methods in reception—amplification and reaction. Consequently receiving gear could be made more selective, receiving aerials could be reduced in size, transmitting power could be reduced, and full use could be made of C.W. transmitters—Poulsen arc, high frequency alternator, transmitting valve—which are more economical in power and permit of closer spacing of transmitting wave-lengths. Wireless direction finding became a practical proposition—a great boon to navigation. A perfect transmitter was made available for speech and music, so opening the way for the modern broadcasting.

The third era—that of short waves—dates from about 1922.

By short waves I mean those below 100m. These short waves have four outstanding advantages for long range working:—

The first is in economy of power. The new G.P.O. long-wave station at Rugby, which is designed to work to Australia, requires about 1000 kW, whereas the short wave beam station now being erected by the Marconi Company for the G.P.O., and intended for the same purpose, will require about 40kW, *i.e.*, 4 per cent. of Rugby's power.

The second advantage is the possible utilisation of a totally virgin field of wave-lengths.

Before the advent of short waves it was becoming most difficult to fit in any new channel of communication in Europe or America; most of the available wave-lengths between 300 and 30 000m. were fully employed.

It is now possible to open up new services in the unrestricted field below 100m. This field is *not* as narrow as it might appear at first sight. The necessary spacing between two waves depends, not on their wave-length, but on their frequency, and the shorter the wave the higher its frequency and *vice versa*—"the higher the fewer!"

There is actually the same frequency difference between 9 and 10m. as between 90 and 30 000m.

If therefore the use of short waves proves

Digitized by Google

as successful as we anticipate, and if the band of really useful short waves is not too narrow, there should be enough for everyone for a good long time.

It is as if a man living in an overcrowded house were to dig down through the floor of his cellar and find below another house of greater dimensions than his own.

The third advantage of short waves is that they can be concentrated in a given direction by the use of a reflecting screen.

In order to reflect any ether wave, the reflector must have dimensions of the same order as that of the wave being reflected. This process is, therefore, only applicable to short waves, as long waves are put out of court by the *size* of the reflector they would require.

The fourth advantage is that atmospherics, the world over, are far weaker on short waves than long ones.

A property of short waves when directed upwards—of leaving the surface of the earth near the transmitter and coming down again very much farther off—is an advantage when you know the position of the receiving station—since you can avoid interfering with intermediate stations—and a disadvantage when you don't, as in the case of communication to a mobile station.

Very short waves, of the order of centimetres, were used by Hertz in his pioneer experiments, and he also used a reflector to polarise them.

After that they were neglected for signalling purposes till 1918. Military authorities of a foreign country were testing them for the purpose of giving communication over a range of about 20 miles while being inaudible at 40 miles. This purpose they achieved, but to the astonishment of everyone they were picked up again in a country 2 000 miles away.

After the war the amateur comes into the picture, and, in my opinion, all wireless engineers owe a tremendous debt to him.

When bands of waves were being parcelled out for various services, the professional users were allocated all those thought to be of any value, while the amateur—at the end of the queue—was given the band below 220m. which no one else wanted.

As a great concession, he was also given 1 000m. for a time, as being the only one he could possibly get any range with.

It was thought possible that he might work from Balham to Peckham Rye, or even from Caterham to Gerrard's Cross. Instead, he promptly starts signalling across the Atlantic.

The sequence of affairs is roughly as follows: In December, 1921, an elaborate programme of transmission on 200m. by American amateurs was arranged, and read successfully in England at night only. The best reception was by an American, Mr. P. F. Godley, who erected a Beverage aerial specially for the purpose, in Scotland.

In 1923 two-way night communication was established between U.S.A. and France and U.S.A. and England on 100m.

In May, 1924, two-way night communication between Buenos Aires (using 120m.) and New Zealand (using 190m.).

In October, 1924, two-way night communication between England and New Zealand on 90m.

In May, 1925, two-way *daylight* communication between England and U.S.A. on 23m.

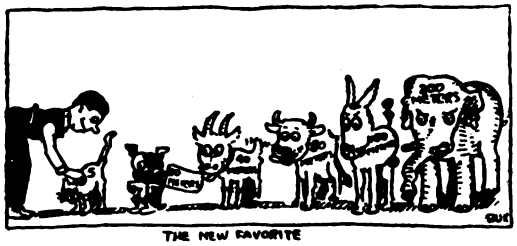

Fig. 1.*

Fig. 1 shows pictorially the reduction in wave-length that has taken and is taking place.

The foregoing is only a very brief summary, and to do justice to all the pioneer experimenters would take me all night.

It does, however, illustrate my point—namely, that of the rapid progress in invention and technique which has brought us to the present position when practically every range on the earth's surface has been bridged in daylight, with power less than a kilowatt.

I will now turn to professional developments.

After the war it was considered desirable to link up the Empire by wireless telegraphy to provide a service supplementary to the cables.

The first proposal was that of the Government Committee presided over by Sir Henry

* Reproduced by courtesy of *QST*.

Digitized by Google

Norman in 1922: that was to link up the Empire in 2 000 mile stages, using long-wave high power stations, with stations in England, Egypt, Nairobi, South Africa, India, Singapore, Hong Kong, Australia, Canada. This meant that a message for Australia would be relayed via Egypt, India and Singapore.

The Dominions replied that they would prefer to have larger stations and work direct.

A Parliamentary Commission in 1924, under Mr. Robert Donald, agreed to this, and the G.P.O. commenced the construction of Rugby, which will be opened before the end of the year; this station uses 1 000kW, has 12 masts 800 feet high, works on a wave of about 18 000m., and costs about £350 000.

Meanwhile Australia, South Africa, Canada and India entered into contracts with subsidiary companies of the Marconi Company for the erection of corresponding high power stations.

Suddenly, in July, 1924, Senatore Marconi announced that his short-wave experiments from Poldhu on a wave of 92m. had given him excellent communication with Australia, while darkness extended over the whole route, and had led him to believe that by using ultra high speed signalling, for which, he stated, short waves are particularly suitable, he would clear as much traffic during the dark hours as the long-wave stations would have done in 24 hours.

The waves would be directed on the required bearing by means of a reflecting screen, so giving great economy in power and freedom from interference.

In December, 1924, he further announced that using a wave of 30m. he had communicated to Montreal, Rio, Buenos Aires and Sydney *entirely during daylight* and without using a reflector.

His most recent experiments (September, 1925) showed that a wave of 15m. gave excellent communication with Rio by daylight, but that this wave failed during darkness.

As a result of these experiments, all the Dominion contracts for high power stations were cancelled, and substituted by ones for short-wave beam stations.

At the present moment beam stations are nearing completion in England as follows: At Bodmin a double transmitter for working to Canada and South Africa, with a double receiving station at Bridgwater; at Dorchester with reception at Somerton for working New York and South America; at Grimsby with a double receiving station at Skegness for working India and Australia. All these stations are being paid for if successful by the G.P.O., and will be controlled by land line from London.

It is interesting to note the cost of Rugby in comparison with the double stations at Bodmin and Bridgwater—the former costs £350 000 and the latter £55 000 per transmitter and receiver, or about one-sixth of the cost, and this would be lower still if all-round transmission were used instead of beam.

The results of trials of these stations will be awaited with much interest.

Numerous other long range services are springing up; for example: Paris to Djibouti—Madagascar to South America—Germany to South America—Holland to Java.

Nauen has three transmitters: POR13 and 18m.; POW 28m., 50kW; AGA 26m., 10kW.

A contrast to the optimism of the Marconi Company is found in an article by a French engineer in *Radio Electricité*, 10th May, 1925. He says:—

"From the different results obtained in France and abroad we can affirm that short-wave stations of powers from 10 to 20kW are capable of handling traffic at great distances, but only during certain strictly limited periods.

"Moreover, the possible duration of the traffic, as also the quality of the reception, itself vary from day to day and from season to season. It has even been noticed already that results vary from one year to another on corresponding dates, doubtless on account of differing atmospheric conditions.

"Progress will certainly be made. The most recent trials on short waves of the *order of 30m.* allow one to hope that the daily duration of use will be increased by reducing the wave-length. Perhaps one may be driven to the use of short waves of different lengths according to the conditions of the time and atmosphere. However that may be, one cannot hope that this new development will allow in the near future of a permanent long range traffic during 24 hours a day throughout the year."

The above article was however written six months ago, which is a long time in these days of short wave development, but

Digitized by Google

I believe this view that short waves will only be useful to supplement the service provided by long range high power stations, is shared by American radio engineers. Time and trial alone can show whether their eccentricities will prevent their use in entire substitution of long waves for long range working.

The next question to be considered is: In what way is the technique of short waves different from that of long ones?

In the transmitting circuit every precaution must be taken to keep the wave-length constant, and to avoid undesired capacity effects. All connections must be rigid and well spaced. A master-oscillator circuit of some sort must be provided, as the valve cannot be allowed to oscillate the aerial direct. Fig. 2 shows a typical circuit.

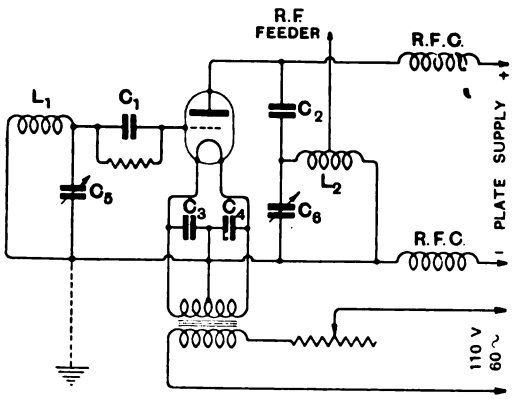

Fig. 2.* *A typical short wave transmitter.*

C_1 C_2 grid and anode stopping condensers; C_3 C_4 filament by-pass condensers; C_5 grid tuning condenser; C_6 anode tuning condenser; L_1 L_2 grid and anode coils; *R.F.C.* radio-frequency chokes.

The *aerial* itself is treated in a different way, in that account is taken of its length in proportion to the wave-length it is desired to transmit.

In the case of long waves, one hangs up an aerial, as high and as long as one can, ascertains its natural wave-length, and then loads it up with inductance till it is tuned to the desired wave-length.

In the case of short waves, however, the aerial is carefully measured and cut till it is some sub-multiple, *e.g.*, $\frac{1}{4}$, $\frac{1}{3}$, $\frac{1}{2}$, etc.—of the transmitted wave-length.

Very often the aerial is a rigid metal rod, as in the case of the American broadcasting station KDKA.

Fig. 3 illustrates one aerial that was described in the American journal *Q.S.T.*

The "driver" circuit is the one illustrated in Fig. 2.

The length of the horizontal portion of the aerial is exactly $\frac{1}{2}\lambda$, and the aerial will oscillate as shown with a potential node and current antinode in the centre.

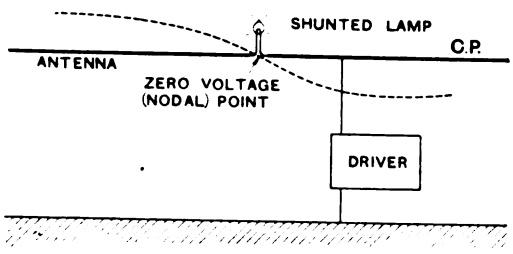

Fig. 3.*

The lamp in the middle, being at an antinode of current, will light up and is a convenient means of indicating resonance.

Receiving circuits may be of the simple type—having a valve detector and note magnifier as in Fig. 4.

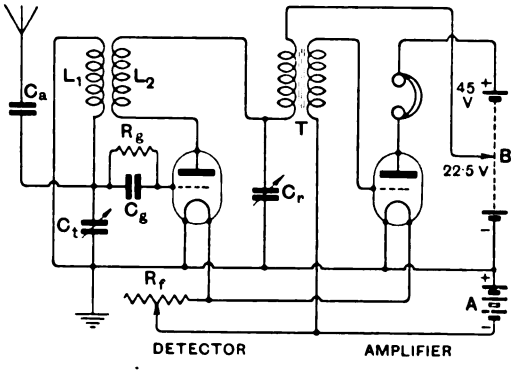

Fig. 4.† *A short wave receiver.*

C_a coupling condenser—two $\frac{3}{4}$ in. discs; C_t tuning condenser; C_r reaction control condenser; L_1 $2\frac{1}{2}$ turns 3in. dia.; L_2 $3\frac{1}{2}$ turns 3in. dia. for 20m; R_g 2—10 megohms.

* H. W. Williams, *Q.S.T.*, July, 1925.

† Circuit by Burgess Battery Co.

Digitized by Google

I will now turn to the question of why these remarkable results are achieved by short waves and not by long ones, and why such differences exist between the behaviour of various short waves.

The reasons appear to me to be threefold.

(*a*) The wave is directed upwards, and so travels round the world without expending energy in heating up the mountains, trees and clouds it would otherwise encounter.

(*b*) The short wave is reflected from the Heaviside layer at a flatter angle than the long wave.

(*c*) The short wave aerial is a better radiator of energy than the long wave one.

These statements require explanation.

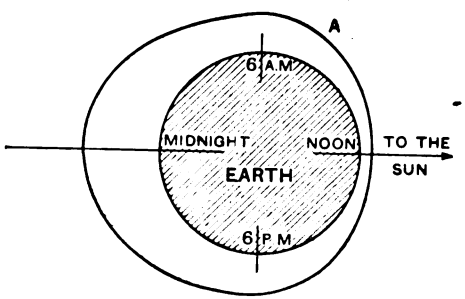

Fig. 5.

The fact that wireless waves get round the earth at all, instead of shooting off into space, is because they are partly guided round, following the surface of the earth and partly reflected round by the "Heaviside" layer.

The "Heaviside" layer is a layer of gases about 100km. above the surface of the earth, kept so ionised (*i.e.*, rendered conductive) by electrons and ultra-violet rays arriving from the sun, that they form a mirror to wireless waves and will not allow them to pass through.

You will notice that the distance of the layer from the earth (Fig. 5) is irregular, being farther away from the earth on the dark side, and nearer on the sunny side.

The existence of this layer is denied by some authorities. In my opinion, if it does not exist, there must be a similar layer with a different pet name if we are to account for 90 per cent. of the phenomena of long range wireless transmission!

Now in the case of the ordinary aerial where the wave-length is long in comparison to its height, the majority of the energy is directed along the ground, and only a comparatively small component upwards.

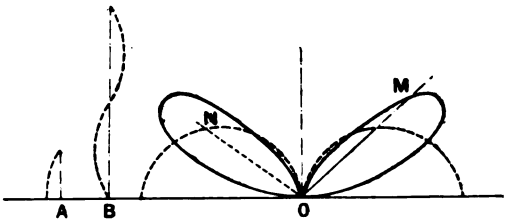

Fig. 6.

The "earth-bound" portion loses energy in every conductor it encounters, such as mountains, trees, ionised patches of air, etc., and generally gets very badly treated.

The "free" (upward) wave is reflected back to earth again, and has a very much better path for its travel than the ground wave.

Incidentally, at the point where it meets the ground wave again, one gets interference effects, which account for the well-known phenomena of "Fading."

The short waves, however, can be made to bear a definite relation to the actual length of the aerial and when they do, it is found that the radiation is directed upwards at some angle, instead of horizontally. Figs. 6 to 11 show the manner in which,

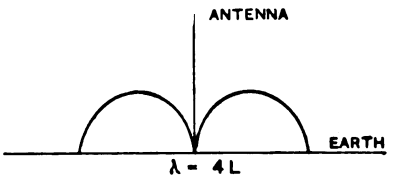

Fig. 7.

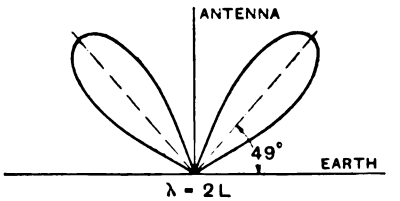

Fig. 8.

according to theory, energy is radiated from a vertical aerial on a perfectly conducting earth, at angles varying according to the relation the length of the aerial bears to the transmitted wave.

Digitized by Google

The theory that energy is reflected in an upward direction from a short-wave aerial is borne out by the fact that there is always (in all other cases except that of the quarter

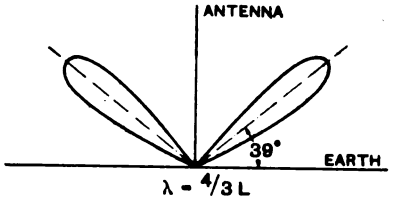

Fig. 9.

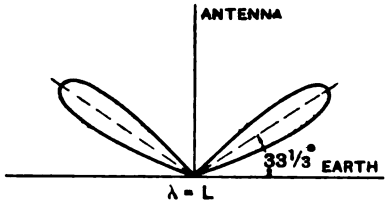

Fig. 10.

wave-length aerial) a zone in the neighbourhood of the transmitter in which signals cannot be heard, which is presumably because they are passing overhead.

This theory, shown in Fig. 8, leads one to wonder whether there is a best angle for the energy to be radiated according to the time of day and range required and whether the ratio

$$\frac{\text{wave length}}{\text{aerial length}}$$

should be arranged to give this angle.

Moreover, in theory, the energy radiated at this optimum angle can reach a high value compared to the energy emitted by a vertical aerial energised on its fundamental wave-length.

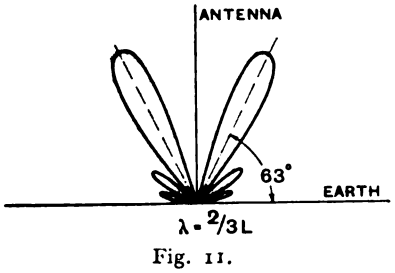

Fig. 11.

Thus, on the third harmonic, the energy radiated at an angle of 47° is one and a-half times that radiated horizontally by a vertical aerial oscillating at a ¼ wave-length; on the fifteenth harmonic, the energy, radiated at an angle of 72°, is four and a-half times greater than the radiation on the fundamental wave.

My statement that the Heaviside layer forms a reflector requires some qualification.

It is not a sharp clear-cut conductor, but a gas whose conductivity at any point depends on the number of electrons momentarily free of an atom.

The difference between a conductor and dielectric is a matter of degree, depending on the number of free electrons present.

This is particularly the case with a gaseous conductor.

Mr. Reinartz' theory is that while a long wave will be sharply reflected off it and attain only a short range, another shorter wave may penetrate a little way and go off at a different angle, or be only refracted (bent

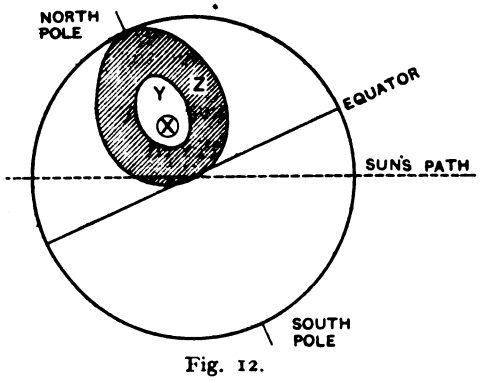

Fig. 12.

Signals can be heard in areas *X* and *Z*, not in area *Y*.

from its course) a little, and thus come back to earth farther off than the longer wave.

A useful, though not quite accurate analogy for the varying penetration of different wave-lengths into the Heaviside layer, is a spinning bicycle wheel: if you throw a tennis ball at it, the ball will glance off, whereas if you fire a bullet at it the bullet may pass through without touching a spoke.

In Fig. 13 we have a ray of light leaving water vertically and entering air. It does this without being bent. If the light starts at some slight angle, such as that of *B* in Fig. 13, it is refracted or bent as it leaves.

If it comes up through the water at a still flatter angle as *D* in Fig. 9, we shall

Digitized by Google

get complete *reflection,* in which the angles I and R are alike.

Well, it may be that the shorter waves by penetrating farther into the Heaviside layer are either reflected or refracted on at a flatter angle than the longer waves.

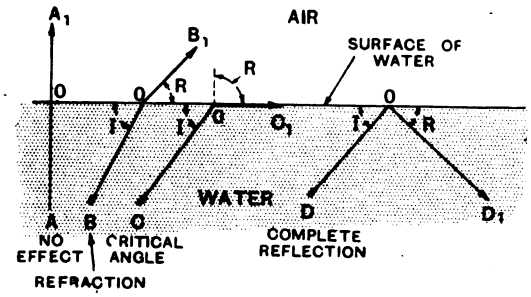

Fig. 13.

The third point deals with the radiation efficiency of an aerial.

Of the energy put into a transmitting aerial, some is expended in useful radiation, and the remainder in warming up the aerial and earth systems, neighbouring conductors, and poor dielectrics.

The higher we can make the ratio

$$\frac{\text{energy radiated}}{\text{total energy supplied}}$$

the more efficient is our aerial as a radiator and the less the power required.

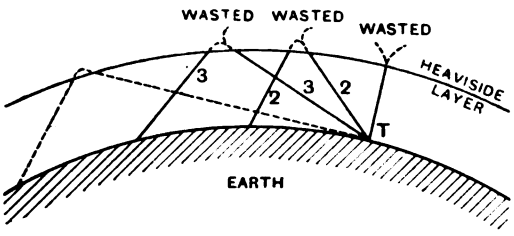

Fig. 14.

In other words, we want a high "radiation resistance"—a term denoting the ability of the aerial to radiate energy—and a low "loss" resistance due to aerial and earth conductors, etc., etc.

The radiation resistance of an aerial emitting a wave (λ) much longer than its height (h) is given by the expression

$$R_{rad} = 1\,600 \left(\frac{h}{\lambda}\right)^2$$

Thus an aerial 20m. high working on a 450m. wave-length would have a radiation resistance of 3.1 ohms, while if it were tuned to 800m. it would only have a resistance of 1 ohm.

In the case however of aerials whose height is of the same order as the wave-length employed, the radiation resistance increases enormously: *e.g.*, an aerial of height 15m. tuned to transmit a wave-length of 30m. would have a radiation resistance of 160 ohms, and a radiation efficiency of about 80 per cent.

You therefore get much better value for your money.

One would have thought that even before the merits of short waves were known, there would have been an ugly scramble for the shorter waves, on account of their greater efficiency of radiation, as shown by the above formula.

Against this must be set the fact that in the case of waves, the majority of whose energy is directed horizontally, the daylight losses are much greater on short wave-lengths than long ones.

Again, before the merits of short waves for easy communication over long ranges were realised, it was thought that the greater the range, the greater must be the power put into the aerial, whereas it now would seem to be much more important to choose one's wave-length correctly.

Big powers mean big aerials to handle the power; and big aerials mean long wave-lengths. Hence the wave of 18 000m. used by Rugby and that of 18 940m. used by Bordeaux.

The whole trend of wireless practice up to last year was in the direction of high powers, long wave-lengths, and elaborate measures to keep down resistance losses.

Since we hear so much nowadays about the beam system, I will now turn to the means used to focus short waves into a beam.

Any ether wave can be focused into a beam if the right sort of reflector is used.

In the case of the wireless beam the reflector takes the form of a number of wires hung up behind the transmitting aerial.

The shape of the reflector in plan may be either parabolic or straight.

The wires constituting the reflector are each separately tuned to the transmitting wave.

When the transmitting aerial is energised

Digitized by Google

it sets all the wires of the reflector in oscillation, and the resultant radiation from them reinforces that of the transmitting aerial in the required direction, while behind the reflector and to the sides there is a little radiation.

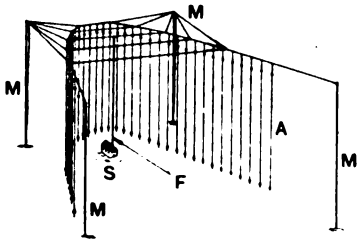

Fig. 15.

A parabolic reflector is not very convenient for long range working, in that it is hard to get into one short aerial all the energy one wants.

It is more convenient to put up a number of aerials in a row, Fig. 18, feed them in parallel, and give each a rear rank man to act as a reflector.

These reflector wires concentrate energy in one direction at right angles to the plane of the aerial—and annul it in the opposite direction.

The aerial wires have no tendency to radiate in a direction in line with themselves, by reason of the way in which they are spaced.

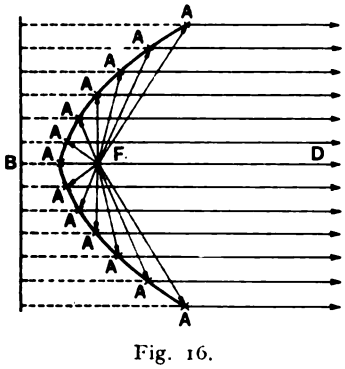

Fig. 16.

This is the form of aerial being adopted by the Marconi Co., both at their transmitting and receiving stations.

I will now drop theory, and turn to two most dramatic instances of the uses to which short wave can be put.

The first is that of the Rice Expedition.

This was an expedition led by Mr. Hamilton Rice, an American explorer, up the River Amazon at the beginning of this year. They took with them two wireless experts—Mr. J. W. Swanson and Mr. MacCaleb and a complete wireless telegraphy outfit.

To quote from *The Geographical Journal* for March, 1925 :—

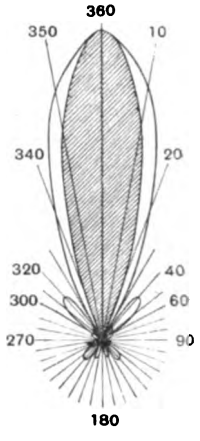

Fig. 17.

" About the middle of January Mr. Gerald Marcuse of Caterham began to pick up morse signals from the Expedition in the early morning, and learned from an amateur in New York that Mr. Swanson was receiving his signals from Caterham. At 6 a.m., on the morning of 19th January, Mr. Marcuse was called up by WJS and got into easy communication : at that date Mr. MacCaleb reported that they were also in touch with New Zealand.

" On 6th February, we received, by the kindness of Mr. Marcuse, the following message :—

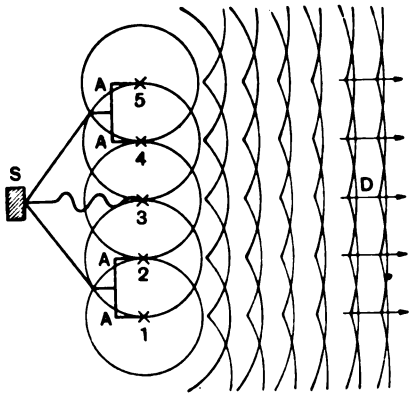

Fig. 18.

" 'No. 1 words 68 via WJS and 2 NM. Main party arrived at junction URARI and URARICAPARA rivers 19th January, lat. 3° 22′ N. 61° 55′ W. progress slow, owing to extremely difficult physical conditions.

Digitized by Google

"'Personnel expedition numbers over fifty, good food, and cargo-relay transport working efficiently. Unable use hydroplane at present due low water, objects expedition being attained. All well. This message sent by expedition's own wireless.—RICE.'

"Mr. Marcuse kindly undertook to transmit a reply, and after a failure on 7th February, owing to atmospherics, was able to get through at 6.30 a.m., on 8th February. . . .

"The station WJS. at Boa Vista is using a Delco lighting set of gas-engine, dynamo and accumulators, from which they run a motor-generator. The wave-length was 81m.

"Thanks therefore to the skill and energy of Mr. Marcuse on this side it was established that an expedition 5 000 miles away in difficult conditions can from time to time report to us its progress in the field. . . ."

I may point out that had this expedition been in trouble it would have been possible to organise a relief expedition, on receipt of a request for help, by this route: and that not only would a long wave outfit have failed to get through at this range, but probably would not have got through to the nearest civilised town—at any rate using a long wave set light enough to be taken with the expedition.

A parallel instance is that of the wireless communication which has been maintained on short wave with the American Macmillan Polar Expedition ships *Bowdoin* and *Peary*. These ships off Greenland, have been read in the U.S.A., Mexico, Canada, England, France and Holland. On 37m. traffic was handled and Government messages passed by night. Daylight communication has also been effected on 20m., 16m., and 8.7m.

Traffic has actually been exchanged between the *Peary* and the U.S. fleet when off New Zealand.

A perfect channel of communciation has thus been provided by short wave, and this could not have been done in any other way.

In concluding I wish to state that the fighting services take a very keen interest in what you amateurs are achieving, especially when you record, analyse and publish your results.

All wireless engineers are trying to find out the possibilities of these short waves, and also their limitations.

It is only by numerous observations and accurate analysis of results that the laws governing their behaviour will be learnt. Accurate reports are needed, not only of when you do get through but also when you expect to get through and don't.

I know that when you have sat up all night trying to get someone in Kamschatka or One Horseville, Slosh, and at last succeed, you don't feel like sitting down and writing a long account to your Secretary about it. Unless that is done, however, half your work is wasted.

Try and evolve a theory of your own of what these short waves are doing and then set in and prove it.

The work of your Society and of its kindred societies in other countries, is something unique in the history of the world.

Men of different races are speaking to one another in a common jargon across half the circumference of the earth.

Who knows but that it may be one step towards promoting a better mutual understanding between nations, and towards the universal peace which we all—even we professional "hired assassins"—desire.

DISCUSSION.

Admiral Sir Henry Jackson: We are very much indebted to the author for his very instructive, historical and entertaining lecture. Certainly its delivery was almost perfect. He has not only given us the historical side of the progress of waves of different length but he has also given us a comparison between the obsolete or long wave high power transmission and the modern short wave low power transmission, and he has shown the advantages and disadvantages of each. I should like to criticise one point, because I do not think it is quite fair not to state that the long wave has not got those blind spots which at present exist in short wave transmission, and that is an important point. The long wave is not affected so much by its refraction at the Heaviside layer as the short wave is. Captain Miles has also given us a very clear description of the Heaviside theory, which is generally accepted now, I think, by the majority of scientists and certainly by practical men, although there is a minority which does not agree. The Radio Research Board, of which I am Chairman, have really set themselves systematically to study this question and to try and find out more about the Heaviside layer, whether it is refraction or reflection, etc., and if the height varies at different times with different wave-lengths. The Radio Research Board have set out to do this systematically, *i.e.*, we have got the best instruments we can get; photographic records are to be taken so that there can be no human error due to the ear to vitiate the results. Therefore you can imagine that I have listened to this lecture with

Digitized by Google

very great pleasure and interest. We have heard of these blind spots jumping hundreds of miles here and thousands of miles there, and to have observers at all these places would mean two or three hundred and the Government would be rather against providing money for that purpose. We are therefore limiting ourselves to one thing at a time. We have done directional work and we have done long distance transmission. We are now doing broadcast wave-lengths and doing this work systematically, but we want to work down to the short wave-lengths. That will take some time and it will mean more observers. The author has mentioned the organisation in America and has given us some of the results they have obtained there. I was hoping, and I do hope, that the amateurs in England will give us some help. I have just been speaking to Mr. Marcuse and he tells me he is getting out some results, and if we have other results we shall be able to put them all down and deal with them at the same time and have them most carefully studied. In that way, we hope to get a good deal of information and that will be like having a very large increase in our staff. Therefore, I appeal to those who systematically receive short waves to send us in their results giving the different distances and times and whether the signals can be relied upon when they are being sent. That is the important point, to find out if there is much fading of the signals and also whether there are blind spots and whether they are at distances of 40 or 50 miles or distances of 3 200 or 300 miles. Information of that sort will be very useful. I will not worry you with my own experiments. I have been gradually working down to these short waves from waves of 200 or 300 metres during the past 18 months and it is very interesting work. I have found that the length of the aerial has a great deal to do with the reception as also has the type of valve, but the four-pin valve is all right. In conclusion, I would again say that we are very grateful to Captain Miles for his valuable paper.

Mr. L. F. Fogarty: The lecture, although it has been extremely interesting, is not of a very contentious nature. At the same time, one is entitled to feel very proud of the work of amateurs, as the author has said. I am afraid I cannot contribute anything useful by way of discussion and can only thank the author for his paper.

Mr. Gerald Marcuse: I am sure it has been very interesting listening to Captain Miles' description of short waves, what they do, how they go and how we get them. I am afraid none of us know very much about them yet and probably before 12 months are gone what we have been doing will all be obsolete. That is by the way. It is not many years ago that I was delighted when I was able to communicate five miles. That was with the old spark. Now I am very disappointed if I cannot do 14 000 miles. There is one very important point which the author did not touch upon which seems to me characteristic of short wave work. By that I mean waves below 90 metres, and that is what I may call the concentration of energy or focus point of these short waves or high frequency oscillations. We have definitely established the fact that there is a concentration of energy or focus point somewhere near the Antipodes and within a 600-mile radius of Sydney, and one curious thing is that although the signal strength seems to reach its maximum at that point these signals seem to transmit and to be received best when there is bright sunshine in both spots. We have all imagined that the 45-metre wave—taking that figure as it is the one with which we have been working most—travels best at night and that in daylight we have to drop down to a lower wave-length. That is not quite the case when transmitting to the Antipodes and the best results I have obtained have been when there has been bright sunshine both at the Antipodes and at the transmitting station. Which way the signals go round I am sorry I cannot prove, but it is evident that they travel for the greater part in daylight and penetrate a certain amount of the dark belt. I think we have pretty well conclusively proved that it is a reflected wave. Whether it is off the Heaviside layer or another layer which is beyond, none of us have been there to see (laughter . We have arranged for stations to listen for our signals in America, and they report them very weak, whereas Australia reports them as being very strong, so that that proves they do jump and radiate vertically and then reflect off the layer at a suitable angle for Australia which is there over the heads of intermediate listeners. There is another point which we must not lose sight of, and that is that not many years ago we were warned off a wave-length of 1 000 metres and then off 440 metres, and it was said that the amateurs could have 200 metres which was no use commercially and never would be. Times have changed since then, and I am afraid that some of the large power stations will be obsolete before they are completed. But there is another more important subject, and that is the effect of weather conditions on short waves. The cloud effect seems to be very pronounced. You will find at one moment that the atmosphere seems absolutely dead and then all of a sudden it will come live again. During the past two or three Sundays at midday you could communicate with any part of England but at six o'clock and afterwards everything disappeared and you could not hear an English signal at all on 45 metres. On the other hand, the signals from Australia could be heard as loud as possible. That is a matter which no doubt we shall find out something about. Evidently the one fact well established is that you will not find a short wave below 90 which will effectively communicate over long distances day and night. We shall have to have two wave-lengths for the two purposes. There is one rather curious phenomenon at the moment, and that is that at 3 o'clock in the afternoon you can hear Phillipine Island's amateur and China morse loudly and during the winter months you can listen to distant amateurs all day long. Last year on 90 metres there was a distinct variety of audibility of amateur stations in the Antipodes and on 90 metres it was impossible to communicate with Australia in the morning and with New Zealand in the evening. Now you can do both morning and evening to Australia on 45 metres. Atmospherics do not affect us much in this country, I am glad to say. Sometimes they are bad but generally, taking the whole year through, we find ourselves fairly free from interference in this way. The author touched upon the subject of organisation of amateurs. I think

Digitized by Google

the International Amateur Radio Union is a wonderful organisation. Language forms no barrier at all, and although one may speak Hindu and the other English, we have a language of our own which we can communicate in and understand one another perfectly. I do not say that we can by word of mouth but by word of the key we can.

Major A. G. Lee: I would like to say a few words on the closing portion of the paper in which the author made the suggestion that amateurs should record their results in a more methodical fashion. If we want to know what these short waves do, we evidently want to know more than the mere fact that communication has been established for a few moments between, say, South America and England; we also want to know something about the wave-length, the mode of excitation of the aerial, the amount of power used, the readability of the signal, the amount of fading, etc. There are a number of variables and, if anything is to be sorted out of the results we get, all those factors which influence the result will have to be recorded and the observations tabulated. I do not know whether the Radio Society is undertaking such a work, but it seems to me that a really methodical investigation of the results obtained so far would be a very suitable cap to crown the work already done by the amateurs in showing the possibilities of short waves. The author's explanation of the Heaviside layer is very interesting, but there are some further points which might perhaps be added. The latest modern theories on the subject indicate that the magnetic field of the earth may have an effect on the propagation of short waves It has been found, for example, even with long waves, that magnetic storms have a very pronounced influence upon propagation. The earth's magnetic field enters into the mathematical expressions for propagation of short waves and it has a different effect upon propagation in east and west and north and south directions. This is another variable which might enter into the records of the short wave results. Another point which has been suggested to me is that the amount of power used in the transmitter may affect the path taken by the wave. One of the modern theories is that the wave gets on to the top part of the atmosphere, as the author has described, and there it can affect the free electrons or ions in the atmosphere—more probably free electrons—and therefore if the power in the wave is different in two cases the effect on the electrons will probably be different and the resulting effect on the absorption of the wave in the two cases may be different. This suggestion has not yet been proved, but it is one of the points upon which observation is needed.

Mr. G. G. Blake: Whilst listening to the lecturer a somewhat terrifying thought passed through my mind. Up to a few years ago while we amateurs have been conducting our experiments in transmitting we have had no idea that we had any control over the angle of projection. We have been sending these waves out at random and have got through. In the early days we were sending out long waves and there were no blind spots. The author referred to himself of a "professional hired assassin," and it occurred to me that if he and the "other hired assassins" had taken their gun practice in the early days of gunnery in the same way, not knowing at what angle they were projecting their projectiles, it would have been a somewhat similar sort of thing but the results would have been disastrous. To get back to the paper, there is one thing which I should be very much obliged to the author if he would tell us. He showed us diagrams of transmitting and receiving connections for short wave work, but he did not give us any indication of what wave-length one could get down to with these connections. What is the lowest wave-length for which we can hope to use them?

Mr. F. L. Hogg: On the question of fading, the author suggests that this is due to interference between reflected and direct rays. I should like to suggest that in connection with short waves this cause cannot alone be responsible for all the effects we get, for it seems fairly definitely established that the direct ray is non-existent, in many cases, when we get fading. More likely fading is due to the fact, as the beam theory suggests, that the surface of the Heaviside layer is not necessarily uniform and therefore one would get portions of the same beam reflected at somewhat different angles, and you therefore get varying interference in the receiver. The question of dead spots has been referred to. I know many will disagree, but personally I feel confident that a dead point on short waves does not exist. If we can get our aerials oscillating in such a manner that we get an almost vertical component on some short wave, say 20 metres, we can get our signals good at say 20 miles, whereas if we have not got such a great angle of projection there will be a dead spot up to about 400 miles radius. The reason the dead point is usually found is that when we are wanting to communicate with long distance stations, the best arrangements for long distance are quite useless for short distance, and we have to alter the distribution of current in our aerials to get a signal at a nearer point. I conducted a series of tests on 20 metres at the end of 1924 and I received a very large number of reports, considering the time I was testing. At that time I was working on a very low aerial harmonic, and there was a considerable amount of vertical radiation and not so much in the horizontal direction, relatively speaking. I think the author is hardly fair to physicists such as Heaviside, because it seems to me that we have in his and other theories an almost complete explanation of short wave phenomenon. I am not at the moment considering the effect of weather conditions. If one likes to examine the exact polar curve in the vertical direction of one's aerial, it is possible to predict to a very great extent at what points it will be audible and one can get a check reading of what height the Heaviside layer should be at any particular time. Certain tests which have been conducted bear this out. If you put up a quarter wave aerial surrounded by houses and masts you cannot expect to get a single vertical polar loop. The question of an alteration of power making a difference to the receiving end is, I think, one which will bear investigation. But when one alters the power one also alters, almost invariably, the distribution current in the aerial and when one is making such measurements as these it is necessary to be careful that the distribution current in the aerial is exactly the same as it was before.

Digitized by Google

Mr. H. Bevan Swift: I think that one of the greatest troubles we are going to have with short waves is on the reception side and not so much with the transmitting side. The waves are so sharp to tune that unless we know the whereabouts of the transmitting station we shall miss it and it is really up to the Radio Society rather than the Transmitter Section to try and perfect reception on the short wave band. A lot has been said about the Heaviside layer and no doubt that is one of the most complicated problems we have before us. When the late Dr. Heaviside discovered that layer he unfortunately failed to organise it so that we could know exactly where the ether waves strike and where they will rebound. That is a point we have to deal with and the fickleness of the Heaviside layer is going to be a great drawback to short wave work. There will be other problems coming in, the problem of telephony and the modulation of short waves. All these things indicate the very large field which is open to experimenters to look into. I think the amateurs and experimenters of this country are highly to be congratulated on the very active part they have played in short wave transmission and reception.

Mr. P. R. Coursey: I cannot add much to what has already been said. We are all very much indebted to the author for his paper and the excellent way he has summarised the work that has been done on short waves, and it is very interesting to have one's mind drawn back again to the early transatlantic tests which at the time were such a struggle but which now seem such a commonplace matter. I should be glad if the author could elucidate one point, and that is the much-debated question of the angle of projection of radiation. In the figures that angle was apparently referred to the ratio of L/λ. I believe it has also been referred to the ratio of capacity to inductance in the aerial and attributed to the presence, or otherwise, of a series condenser at the base of the aerial and the proportion which that capacity bears to the effective capacity of the aerial. If the author can tell us anything more about that or elucidate the point a little further, I am sure we shall all be grateful to him.

Captain Miles, replying to the discussion, said: We have had a most interesting discussion to-night, especially from men who have probably forgotten more about short waves than I have ever known. I entirely agree with Admiral Jackson that the long wave at present has a great advantage in not having any blind spots. On the other hand, the long wave has never really achieved the reliable communication that the short wave promises. We have never had a really reliable long wave service to the Antipodes. It has always faded out for some part of the 24 hours, and if short waves do not enable us to effect this continuous communication, it does not seem that anything will. This criticism of the short wave and blind spots may be got over by changing your frequency according to your range, as Mr. Hogg suggested. With regard to Mr. Marcuse and concentration near the Antipodes, I think his statement that the best signalling conditions for communication with the Antipodes is when both stations are in daylight shows distinctly that that is exactly the time when you have darkness on the way across. Undoubtedly, I should say that communication on the waves used is effected round the dark side of the earth. Mr. Blake asked what wave-length the receiver connections which I showed would go down to. I just took those connections as an example of good engineering practice. That receiver worked comfortably from 20 to 80 metres by just changing the coupling coils. The two coils were $2\frac{1}{2}$ turns and $3\frac{1}{2}$ turns, 3-inch former, 16 D.C.C. wire, for 20 metres and you have more turns for the higher wave-lengths. I think you get uncommon difficulties when you go down to 5 metres. Both the transmitter and the receiver circuits are comparatively simple until you get down to about 12 metres and then you have to go in for a rather cunning device of push-pull circuits as described by M. Mesny in *l'Onde Electrique*. Down to 12 metres any ordinary circuit does quite well provided you are careful to keep your wave stable. I should be very sorry to enter into a discussion with Mr. Hogg about fading. There are many theories about it and I am prepared to accept his alternative theory. I do not think I have been unfair to the early workers. I have given Van der Pohl's diagram and the Heaviside layer theory and I have not been seriously criticised about them by the practitioners, such as Mr. Marcuse, and I think the scientists have been surprisingly accurate. I should like to call attention to one thing which rather shakes the faith of the practical engineer in pure theory. According to the empirical Austen-Cohen formula, which has been argued about in detail for years, the shorter the wave the worse it goes whereas I have been talking to you for an hour to prove that the shorter the wave the better it goes. No scientist ever suggested the possibility that waves below 100 m. could cover useful ranges until this was demonstrated practically. I agree with Mr. Bevan Swift about the difficulties in reception. We are rather light-hearted in designing the short wave receiver when experimenting, but when it comes down to making a commercial instrument we shall have to go into the matter very cautiously and make receivers which cover a very small range of wave-length. The difference between 9 and 10 metres is the same frequency spacing as between 100 and 30 000 and no one would dream of designing a single receiver to cover 30 000 metres. You will have to split your receivers up in something like this order: 9 to 9.5 metres, 9.5 to 10 metres and so on, and calibrate very carefully or you will miss the signal.

Replying to Mr. Coursey, the diagrams I have shown, due to Van der Pol, are for a vertical aerial on a perfectly conducting earth. Under practical conditions, with asymmetrical capacity conditions or a roof aerial, the angle of emission will vary somewhat differently with the ratio L/λ. I must thank you for a very patient hearing and I hope, speaking from a selfish rather than a professional point of view, that this meeting will have the effect of getting men, say, like Mr. Marcuse, who know so much about it, to give us the benefit of their experience.

On the motion of Mr. Carpenter, seconded by Mr. Marcuse, a hearty vote of thanks was accorded the author at the conclusion of the discussion.

Digitized by Google

The Rectification of Small Radio-Frequency Potential Differences by means of Triode Valves.—Part III. [R134

By F. M. Colebrook, B.Sc., A.C.G.I., D.I.C.

B.—Rectification by means of the curvature of the foot of the anode current—grid voltage characteristic.

The general type of circuit to be considered is that illustrated in Fig. 24. It is assumed that the applied negative grid potential is of suitable magnitude to bring the "state-point" of the valve into the lower curved part of the anode current characteristic.

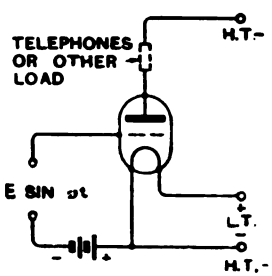

Fig. 24.

The nature of the signal E.M.F. and of the anode circuit load will be specified as each individual case is considered.

16. *General theory of the anode rectification of a continuous wave signal.*

In many applications of the thermionic valve the relationship between the anode current, the anode voltage, and the grid voltage can be expressed in the form of a simple straight line law. This is obviously not the case in the present application. There are, however, very good grounds, both theoretical and experimental, for expressing the more general relationship in the form

$$i_a = f(\epsilon + v_a + \mu v_g) \quad .. \quad (16.1)$$

For the justification of this statement the reader is referred to *The Thermionic Vacuum Tube*, by Van Der Bijl, p. 42 *et seq.* In the above ϵ is a small constant quantity (not, in this case, the base of Napierian logarithms), v_a and v_g are respectively the anode and grid potential differences with respect to the negative end of the filament, and μ is a constant for a given valve. It will be convenient for abbreviation to put

$$(\epsilon + v_a + \mu v_g) = E_s \quad .. \quad (16.2)$$

Putting i for the change in i_a due to a change δE_s in E_s,

$$i = \delta E_s f'(E_s) + \frac{\delta E_s^2}{2!} f''(E_s) + \frac{\delta E_s^3}{3!} f'''(E_s) \quad \ldots \text{etc. } ad\ inf. \quad .. \quad (16.3)$$

where

$$f'(x) = \frac{df(x)}{dx} \quad \text{etc., etc.} \quad (16.4)$$

It will be shown later that under the conditions of anode rectification and for values of δE_s not exceeding $1\frac{1}{2}$ to 2 volts only the first two terms of the above series are really significant, and it will therefore be legitimate to adopt as the fundamental equation for the present analysis

$$i = a_1 \delta E_s + a_2 \delta E_s^2 \quad .. \quad (16.5)$$

where $a_1 = f'(E_s)$ .. .. (16.6)

and $a_2 = \frac{1}{2} f''(E_s)$ .. .. (16.7)

It should be noted that for given initial conditions both a_1 and a_2 are constant co-efficients, the magnitude of which can be determined from the static characteristic of the valve. The application of the above general equation will be found to make the analysis of the rectification process in any given case a comparatively simple matter.

As the fundamental case we will consider the effect of a continuous wave signal E.M.F. represented by

$$e = E \sin \omega t \quad .. \quad .. \quad (16.8)$$

with no additional load in the anode circuit, *i.e.*,

$$\delta E_s = \mu E \sin \omega t \quad .. \quad .. \quad (16.9)$$

By inserting this value in equation (16.5)

Digitized by Google

and taking the mean value of i over one high-frequency period it can easily be shown that the continuous or rectified component of i is given by

$$i_c = a_2\mu^2\frac{E^2}{2} \quad .. \quad (16.10)$$

The change of mean anode current is therefore proportional to the square of the signal E.M.F.

We must now consider the effect of inserting in the anode circuit a pure resistance load of magnitude R, the load being short-circuited by a condenser of sufficient magnitude to provide a path of negligible impedance for the high-frequency components of i. In the first place, before the signal E.M.F. is introduced in the grid circuit, there will be a small change of mean anode current the magnitude of which can be determined from equation (16.5) above. If i_a be the magnitude of the anode current before the resistance R is introduced in the circuit, and i_a' the magnitude of the anode current after the resistance is introduced, then, since δE_s is given by

$$\delta E_s = -i_a' R \quad .. \quad (16.11)$$

$$i = \delta i_a = i_a' - i_a = -a_1 i_a' R + a_2 i'^2_a R^2 \quad (16.12)$$

The exact solution of this equation can be found in the ordinary way, but in practice the effect of the square term on the solution is exceedingly small, so that

$$i_a' \doteqdot \frac{i_a}{1 + a_1 R} \quad .. \quad (16.13)$$

When the continuous wave signal E.M.F. acts on the grid,

$$\delta E_s = (\mu E \sin \omega t - i_a' R - i_c R) \quad (16.14)$$

Inserting this value in equation (16.5) and taking the mean value of i over a period will give

$$\delta i_a + i_c = -a_1 R(i_c + i_a') + a_2\mu^2\frac{E^2}{2} + a_2 R^2 (i_c + i_a')^2 \quad (16.15)$$

and, from equation (16.12),

$$i_c = -a_1 R i_c + a_2\mu^2\frac{E^2}{2} + 2 i_c a_2 R i_a' \quad (16.16)$$

(The term containing the square of i_c has been omitted, as it will be found to be negligibly small.) It is easily seen from equation (16.16) that the expression for i_c can now be reduced to the standard form

$$i = \frac{E_c}{R_c + R} \quad .. \quad (16.17)$$

where

$$R_c = \frac{1}{a_1 - 2a_2 R i_a'} \quad .. \quad (16.18)$$

and

$$E_c = a_2\mu^2\frac{E^2}{2} R_c \quad .. \quad (16.19)$$

It should be noted that R_c is independent of the signal amplitude, but varies with the load R, increasing as R increases. The limiting or no-load values are clearly

$$R_c = \frac{1}{a_1} \quad .. \quad (16.20)$$

$$E_c = \frac{a_2\mu^2 E^2}{2a_1} \quad .. \quad (16.21)$$

Before proceeding to the other applications of anode rectification it will be well to describe the experimental confirmation of the foregoing analysis and indicate the order of the magnitudes involved.

17. *Experimental confirmation.*

(*a*) Determination of the static characteristic.

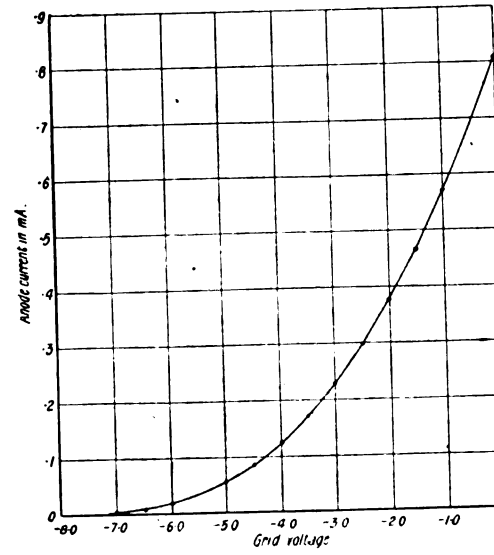

Fig. 25.

This is a very simple matter, and need not be described in detail. The curve of Fig. 25, which refers to a dull-emitter valve,

Digitized by Google

with an anode voltage of 50 and a filament voltage 1.8, is typical of the results obtained for a number of small receiving valves.

It would seem from an inspection of this curve that a negative grid voltage of 5 or 6 volts would give the greatest rectification sensitivity. By actual measurement it was found that a negative grid voltage of 3 volts gave a considerably greater sensitivity. This, therefore, was taken as the fixed initial condition.

(*b*) Determination of the rectification characteristic.

The rectification characteristics for the above initial conditions were measured by means of a circuit almost identical with that described in Section 8 (Fig. 11), the grid-circuit resistance being short-circuited and the grid maintained at a constant negative potential of 3 volts. The high-frequency E.M.Fs. (wave-length about 400 metres) were applied in the same manner as for the grid rectification measurements. The values of i_c were determined for a range of signal amplitudes up to about 1.8 volts, with no load in the anode circuit, and also with various loads up to 50 000 ohms. The results are exhibited in the curves of Fig. 26.

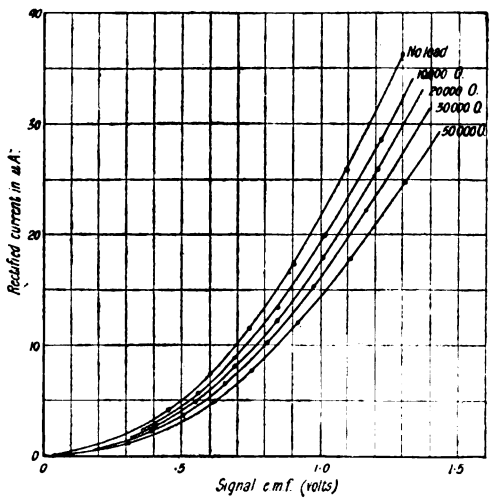

Fig. 26.

(*c*) Analysis of experimental results.

Unfortunately, the static values of

$$\frac{\delta i_a}{\delta e_a} \text{ and } \frac{\delta^2 i_a}{\delta e_a^2}$$

were not determined for the above valve

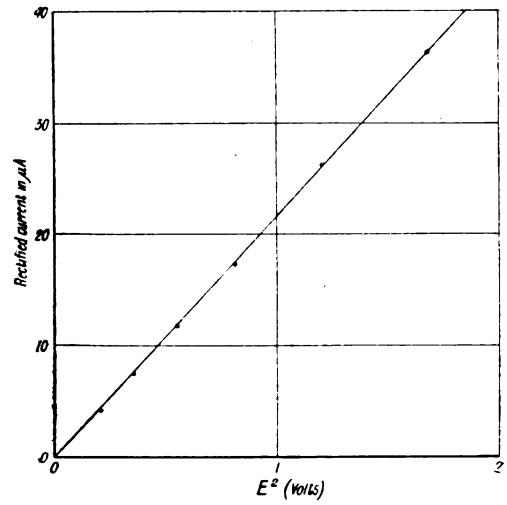

Fig. 27.

at the time of the measurements. To this extent the measurements must be regarded as incomplete. It will be shown, however, that the no-load rectificaton characteristic agrees with that predicted from the i_c, e_g static characteristic. Further, that from the no-load value of R_c the rectification characteristic for any other load can be predetermined.

(*d*) The static values of

$$\frac{\delta i_a}{\delta e_g} \text{ and } \frac{\delta^2 i_a}{\delta e_g^2}$$

For small changes from the intial values, equation (16.5) takes the form

$$i = \frac{\delta i_a}{\delta e_g}\,\delta e_g + \frac{1}{2}\,\frac{\delta^2 i_a}{\delta e_g^2}\,\delta e_g^2 \quad .. \quad (17.1)$$

i.e.,

$$\frac{i}{\delta e_g} = \frac{\delta i_a}{\delta e_g} + \frac{1}{2}\,\frac{\delta^2 i_a}{\delta e_g^2}\,\delta e_g \quad .. \quad (17.2)$$

Thus the first and second derivatives can be found by plotting $i/\delta e_g$ against δe_g and measuring the constants of the straight line so obtained. In the present case it was found that for a range of 2 volts on either side of -3,

$$\frac{\delta i_a}{\delta e_g} = 1.25 \times 10^{-4}$$

$$\frac{\delta^2 i_a}{\delta e_g^2} = 39.76 \times 10^{-6}$$

(*e*) No-load rectification characteristic.

In Fig. 27 is shown the result of plotting i_c against E^2 with no load in the anode

Digitized by Google

circuit, E being the R.M.S. signal voltage. As indicated in the foregoing analysis, the result is a straight line. The measured slope of the line is

$$\frac{1}{2}\frac{\delta^2 i_a}{\delta e_g^2} = 21.3 \times 10^{-6}$$

which agrees within the limits of experimental error with the value $\frac{1}{2}\ 39.76 \times 10^{-6} = 19.88 \times 10^{-6}$ predicted from the static characteristic.

(*f*) The no-load value of R_c.

From equation (16.18) it can easily be shown that

$$a_1 = \frac{a_2 \mu^2 E^2}{2}\left(\frac{\delta}{\delta R}\cdot\frac{1}{i_c}\right)_{R=0} \qquad (17.3)$$

Also, from equations (16.2), (16.6) and (16.7),

$$a_1 = \frac{1}{\mu}\frac{\delta i_a}{\delta e_g} \quad .. \quad .. \quad (17.4)$$

$$a_2 = \frac{1}{2\mu^2}\frac{\delta^2 i_a}{\delta e_g^2} \quad .. \quad .. \quad (17.5)$$

Therefore,

$$a_1 = \frac{1}{4}\frac{\delta^2 i_a}{\delta e_g^2}\left(\frac{\delta}{\delta R}\frac{1}{i_c}\right)_{R=0}$$

and since $\delta^2 i_a/\delta e_g^2$ is known, the value of a_1 can be determined by plotting $1/i_c$ against R and measuring the slope of the curve at $R=0$. The magnitude of $1/a_1 = (R_c)_{R=0}$ was thus found from the rectification characteristics to be

$$\frac{1}{a_1} = 8.41 \times 10^4$$

which, from (17.4) above, gives

$$\mu = 10.5$$

From the above constants the value of E_c and R_c corresponding to any given signal amplitude and load resistance can be calculated as shown above, and i_c can therefore be calculated. The following table gives the values corresponding to a signal amplitude of 1.77 volts, calculated and measured values being given for comparison.

R	R_c	E_c	i_c calc.	i_c measured.
0	8.41×10^4	2.79	33.2×10^{-6}	33.3×10^{-6}
10 000	9.00×10^4	2.99	29.9×10^{-6}	29.8×10^{-6}
20 000	9.55×10^4	3.17	27.4×10^{-6}	27.3×10^{-6}
30 000	10.05×10^4	3.34	25.6×10^{-6}	25.2×10^{-6}
40 000	10.50×10^4	3.49	24.0×10^{-6}	23.7×10^{-6}
50 000	10.98×10^4	3.64	22.8×10^{-6}	22.5×10^{-6}

The agreement between the observed and calculated values is very satisfactory. The comparatively high values of E_c should be noted. They are actually greater than the signal amplitude, which appears to indicate very perfect potential rectification. It must not be forgotten, however, that the magnification factor of the valve enters into these values. The corresponding rectified potentials in the grid circuit will only be about 1/10 of these values, or, better, the effective signal E.M.F. in the anode circuit is about ten times the actual signal amplitude. In spite of this fact, anode rectification is in general very much less sensitive than grid rectification. This will be considered more fully later on. For certain purposes, however, the approximate square law behaviour, and the very high input impedance compared with grid rectification, have considerable practical advantages.

Having thus established the validity of the general theory as presented in Section 16, we are now in a position to analyse the remaining and more important practical cases of anode rectification.

18. *The anode rectification of a modulated continuous wave.*

As in the corresponding case of grid rectification, it will be convenient to confine the analysis to an E.M.F. modulated with a single pure tone, *i.e.*,

$$e = (E + M \sin nt) \sin \omega t \quad .. \quad (18.1)$$

The rectification of this E.M.F. will give rise to certain low frequency currents, and if the anode circuit contains a telephone load or a transformer winding these low frequency currents will give rise to low frequency back E.M.Fs. of which the instantaneous value will be represented by the general symbol v_m. The total change of potential will therefore be

$$E_s = \mu(E + M \sin nt) \sin \omega t - i_a' R - i_c R - V_m \qquad (18.2)$$

To determine the magnitudes of the various components of i, the change of anode current, it is only necessary to insert this value of δE_s in equation (16.5) and then equate separately the components of equal frequency. The process is quite straightforward and need not be given in detail. It will be found

Digitized by Google

that the continuous component is

$$i_c = \frac{E\left(1 + \frac{M^2}{4E^2}\right)}{R_c + R} \quad .. \quad (18.3)$$

i.e., the percentage change in the rectified E.M.F. due to the modulation is $25\frac{M^2}{E^2}$ In nearly all cases of practical telephony the ratio of M to E is small. The modulation will therefore produce no appreciable change in the magnitude of the continuous rectified current. This fact can be verified experimentally as already described in connection with grid rectification.

The fundamental modulation frequency component of the current is given by

$$i_n = \mu^2 a_2 EM - v_n(a_1 - 2a_2 i_a' R - 2a_2 i_c R) \quad (18.4)$$

and since i_c will be small compared with i_a',

$$i_n = \mu^2 a_2 EM - \frac{v_n}{R_c} \quad .. \quad (18.5)$$

In vector form this is equivalent to

$$\mathbf{I}_n = \frac{\mathbf{E}_n}{\dot{Z}_n + R_c} \quad .. \quad .. \quad (18.6)$$

where $\mathbf{E}_n$ is a vector representing an E.M.F. of frequency $n/2\pi$ and amplitude

$$\dot{E}_n = \mu^2 a_2 EMR_c \quad .. \quad .. \quad (18.7)$$

and $\dot{Z}_n$ is the impedance operator for the load at the modulation frequency. The double frequency component is given by

$$\mathbf{I}_{2n} = \frac{\mathbf{E}_{2n}}{\dot{Z}_{2n} + R_c} \quad .. \quad .. \quad (18.8)$$

where

$$E_{2n} = \frac{\mu^2 a_2 M^2 R_c}{4} \quad .. \quad .. \quad (18.9)$$

The ratio of the parasitic double frequency term to the single frequency term is therefore

$$\frac{I_{2n}}{I_n} = \frac{M}{4E} \frac{\sqrt{(R_n + R_c)^2 + X_n^2}}{\sqrt{(R_{2n} + R_c)^2 + X_{2n}^2}} \quad .. \quad (18.10)$$

where R_n, R_{2n}, X_n, and X_{2n} are the resistance and reactance components of the two impedance operators. Apart from any resonance effects it is clear that this ratio will in general be less than $\frac{M}{4E}$. *i.e.*, as a percentage it will be less than a quarter of the modulation percentage. If the latter is kept small, as it generally is in practice, the double frequency term will be relatively unimportant.

Equation (18.6) can if desired be expressed in terms of the slope of the rectification characteristic corresponding to the given value of the zero frequency resistance of the anode circuit load. From equation (16.17),

$$\frac{\delta i_c}{\delta E} = \frac{1}{R_c + R} \cdot \mu^2 R_c a_2 \cdot E \quad (18.11)$$

$$= \frac{1}{R_c + R} \frac{E_n}{M} \quad .. \quad (18.12)$$

Therefore

$$E_n = M(R_c + R) \frac{\delta i_c}{\delta E} \quad .. \quad (18.13)$$

and

$$\mathbf{I}_n = \frac{R_c + R}{Z_n + R} \frac{\delta i_c}{\delta E} \mathbf{M} \quad .. \quad (18.14)$$

where $\mathbf{M}$ is a vector of magnitude M and frequency $n/2\pi$. For most purposes, however, the form of equation (18.6) will be the more useful.

Efficiency and Distortion in the Anode Rectification of a Modulated Continuous Wave.

The modulation frequency power consumed in the load is $\frac{I_n^2 R}{2}$. Writing P_n for this, it is easily shown from equation (18.6) that

$$P_n = \frac{\rho_n \cos\theta_n}{\rho_n + 2\rho_n \cos\theta_n + 1} \frac{E_n^2}{2R_c} \quad .. \quad (18.15)$$

where ρ_n is the ratio of the magnitude of $\dot{Z}_n$ to R_c and where θ_n is the phase angle of the load at the given frequency. For any constant value of θ_n the frequency term in equation (18.15) is a maximum when $\rho_n = 1$. The general character of the variation of this expression with ρ_n can be seen from Fig. 28, where the curve is drawn for $\theta_n = 0$. For most small receiving valves R_c may be anything from 50 000 to 100 000 ohms. (It is important to realise that it will always be greater than the internal slope resistance corresponding to the straight part of the characteristic.) The optimum impedance load for anode rectification is therefore in the region 50 000 to 100 000 ohms. A telephone load would therefore seem to be particularly unsuitable, for not only is it inefficient electrically, but it is inefficient on the wrong side of the maximum, the side where its efficiency varies most rapidly with frequency. In general it seems likely that a telephone load will greatly favour the higher frequencies. A full discussion of the

Digitized by Google

frequency distortion associated with anode rectification on account of the variation of the load impedance with frequency is beyond the scope of the present paper, for it would involve a number of other factors, physiological and physical. It is a subject for which much more data are required than appear to be available at present. The above brief discussion can only be regarded as an outline of the electrical side of the question.

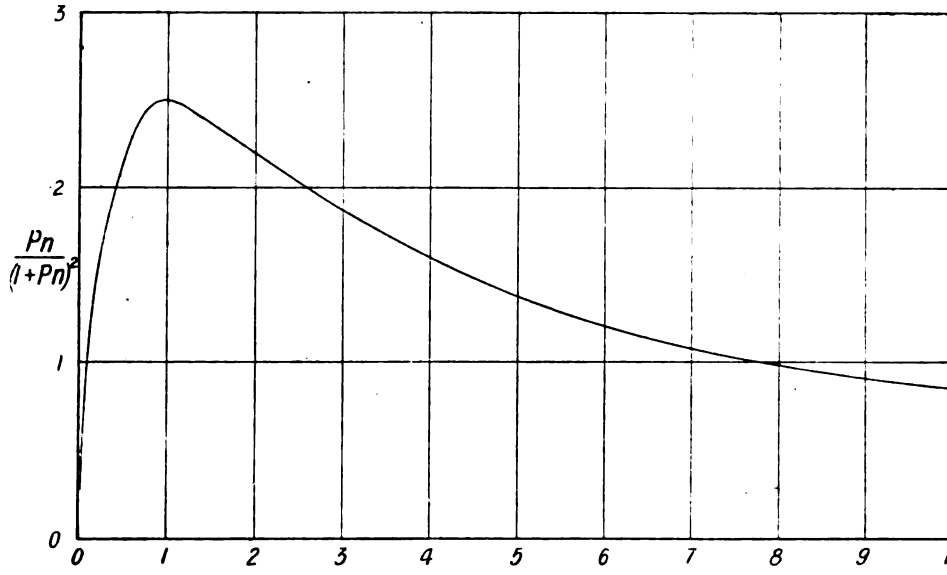

Fig. 28.

19. *Heterodyne reception with anode rectification.*

The analysis of this case will follow so closely that already given in Sections 14, 16 and 18 that only a brief outline need be given here. As in Section 14, the resultant E.M.F. due to the sum of the signal and the local oscillation will be expressed in the form

$$e = E\sin(\omega t+a) \quad .. \quad (19.1)$$

where

$$E^2 = E_1^2+E_2^2+2E_1E_2\cos(nt+\beta)$$
$$= E_r^2+e_n \quad (19.2)$$

Using the same symbols as in the sections referred to above,

$$\delta E_s=\mu E\sin(\omega t+a)-i_a'R-i_cR-v_m \quad (19.3)$$

The various components of the change of anode current due to the heterodyned signal can be found by substituting this value of δE_s in equation (16.5) and then equating separately the terms of equal frequency. It will be found that the continuous component is given by

$$i_c = \frac{E_c}{R_c+R} \quad .. \quad (19.4)$$

where

$$E_c = \tfrac{1}{2}\mu^2 a_2 R_c(E_1^2+E_2^2) \quad (19.5)$$
$$= \tfrac{1}{2}\mu^2 a_2 R_c E_r^2 \quad .. \quad (19.6)$$

R_c being the same as in Section 16.

The fundamental beat frequency component will be found to be

$$i_n = \mu^2 a_2 E_1 E_2 \cos(nt+\beta) - v_n/R_c \quad (19.7)$$

or in the more convenient vector form

$$\mathbf{I}_n = \frac{\mathbf{E}_n}{\dot{Z}_n + R_c} \quad .. \quad (19.8)$$

where

$$E_n = R_c\mu^2 a_2 E_1 E_2$$

$\dot{Z}_n$ being the impedance operator of the load at the beat frequency.

In the corresponding case of a modulated continuous wave, it was shown that there would be in addition a small double frequency component (see equation (18.8)). In the present case, however, since δE_s^2 contains only the first power of e_n, there will be no double frequency term (except an exceedingly small factor derived from the square of v_n, itself a small quantity). This fact should be noted, as it has a useful significance in relation to the super-heterodyne reception of telephony.

Digitized by Google

Returning to equation (19.8), the chief features of this result are :—

(1) The amplitude of the beat frequency component of the anode current is proportional to the product of the amplitudes of the signal and the local E.M.Fs. This was not true of the corresponding case in grid rectification. This does not mean, however, that an indefinitely great increase in effective sensitivity can be obtained by increasing the amplitude of the local oscillation, for the above equations only apply exactly for signal amplitudes not exceeding about two volts. For large amplitudes of high-frequency grid voltage the change of anode current will no longer be proportional to the square of the high-frequency amplitude, tending ultimately to proportionality to the first power. This condition will set an upper limit to the increase of effective sensitivity.

(2) There is in the present case no loss of sensitivity such as that associated with the grid condenser in grid rectification (see Section 13). Under certain conditions, therefore, particularly at long wave-lengths, anode rectification may have a greater net sensitivity than grid rectification in heterodyne reception, though the sensitivity of the latter method will be very much greater than that of the former in relation to the rectification of a pure continuous wave.

This, together with the fact that only a single frequency is produced by the anode rectification process, makes the latter method particularly suitable for super-heterodyne reception.

More will be said about the comparison between grid and anode rectification in the last section of the paper.

(To be concluded.)

The Wireless Annual for 1926.

PROBABLY the outstanding impression gained from a first perusal of this year's *Wireless Annual* * is of the rapid expansion of amateur communication during 1925. New experimental stations have sprung up in all corners of the world, so that the Directory of Transmitting Stations, which has always formed a feature of this useful publication, is now swollen to approximately 30 pages of closely-packed type. British call signs absorb about a third of the allotted space, the remainder of which is devoted to stations as far asunder as Spain and Argentina, South Africa and India, Finland and Australia.

Another valuable section rightly retaining a place in the volume is that giving useful tables and data to which every serious experimenter must have recourse from time to time.

There are some noteworthy contributions on the purely technical side. Among these must be mentioned " Valves, Their Uses and Characteristics," an article by W. James in which the basic principles of the thermionic valve are lucidly explained, together with methods of finding the amplification factor, and of obtaining a characteristic curve of any particular specimen. A valuable appendix provides data regarding valves of all the leading makes.

Mr. F. H. Haynes deals with circuits for broadcast reception, giving over forty examples with a brief explanation of each, and this section is followed by a clearly-written article on " Finding and Rectifying Faults in Receivers," in which the various shortcomings likely to be encountered are classified together with a list of " probable causes."

In a review of wireless progress during 1925, Mr. Hugh S. Pocock touches upon the formation and work of the Geneva Broadcasting Bureau, general commercial developments as revealed in the adoption of the " beam " system, and the enormous strides made by amateurs in short-wave research work. The advances made in broadcasting, particularly as a factor in international relationships, are brought home to us very forcibly in an article by Mr. A. R. Burrows, setting forth the work and aims of the International Broadcasting Bureau.

As a survey of the present position of wireless in its many ramifications, *The Wireless Annual* is of undoubted value to every experimenter.

* *The Wireless Annual for Amateurs and Experimenters*, 1926. London : Iliffe & Sons, Limited, Dorset House, Tudor Street, E.C.4. Price 2s. 6d., post free 2s. 8½d.

Digitized by Google

Rectifiers for High-Tension Supply.

By R. Mines, B.Sc. [R355·5

Addition to Part V.

XIII.—Use of Curved Electrodes.

IT may be shown that if the electrodes are curved (in the same plane as the direction of the electron paths), for example, so that they become two concentric cylinders, then the shapes of the paths are different according as the electron starts from one or other electrode. In this case the mathematics tell us that the *critical value* of the field is different for the two kinds of path, assuming the same P.D. between the electrodes in either case. This result may also be stated conversely—that for a constant field the *critical value of the P.D.* is different; and this means it is different for the two directions in which it may be applied to the tube, since electrons proceed only from the negative electrode when conduction is taking place.

This apparatus, then, constitutes a *rectifier* as distinct from a *switch*, there being no operation or control of the magnetic field in synchronism with the alternating supply. The necessary magnetic field may, in fact, be applied to the gap from a permanent magnet; and in actual rectifiers that have been constructed on these lines it has been found easiest to apply it in a direction parallel to the axis of the cylindrical electrodes. An example was shown in E.W. & W.E. for May, 1925 (p. 472), *q.v.*, which showed the improved magneton rectifier developed by Bush and Smith.*

With a constant P.D., the critical field is inversely proportional to the radius of curvature of the electrode; and with a constant field the critical P.D is inversely proportional to the square of the radius.

XIV.—Further Reduction of Gas Pressure: Production of Cathode Rays.

Continuing from Section II our description of the effects obtained in a discharge tube as the gas pressure is reduced; we find that, when the pressure is between 1/1 000 and 1/10 000 of atmospheric, the glows associated with the anode have disappeared, and those originating near the cathode have expanded well up to the anode. This is called the "fourth type" of Geissler discharge. Beyond this again (in the region between 100 and 10 millionths of an atmosphere) "cathode rays" are produced. These rays are nothing more nor less than a stream of electrons issuing from the cathode; they have the important properties of *rectilinear propagation* (travelling in straight lines) and *normal emission* (*i.e.*, they are projected perpendicularly from the cathode surface, however this may be placed). These properties are easily accounted for by the *cathode fall*, which, though present at all gas pressures, becomes accentuated as the gas pressure is the reduced "conductivity" of the gas at these extremely low pressures, which necessitates the application of a very high P.D. between the electrodes (running into thousands of volts) before any discharge will pass. The electrons are released by positive ion bombardment in the manner already described; in the immediate neighbourhood of the cathode the electric field is perpendicular to the surface, and it is in this direction that the electrons receive the bulk of their momentum; and the comparatively weak fields in the remainder of the discharge tube effect no appreciable alteration in the velocity or direction of their motion.

XV.—The Lodge Valve.

The normal emission property of the cathode rays is utilised in an ingenious manner in the high-tension rectifier developed by Sir Oliver Lodge. The constructional features of this are shown in Fig. 12. Note that when the side electrode is cathode, a parallel cathode ray stream is produced which travels past the spiral electrode; a good proportion is arrested by it and the remaining electrons will largely find their way via the gas and the glass walls. When the spiral electrode is made negative, the

* *P. Inst. Radio Eng.*, Vol. 10, p. 41, Feb. 1922.

Digitized by Google

electrons ejected from it travel away in all directions and only a small proportion will find their way to the other electrode.

The device therefore shows a marked asymmetry of conduction. It is, however, only a partial rectifier, though it proves very satisfactory in connection with X-ray tubes, for which use it was originally designed. In common with other apparatus employing the cathode ray stage of vacuum discharge, it is suitable for use only with high P.D.s., due to the reduced conductance in the tube ; this factor also places a limit on the current that may be passed through such a rectifier.

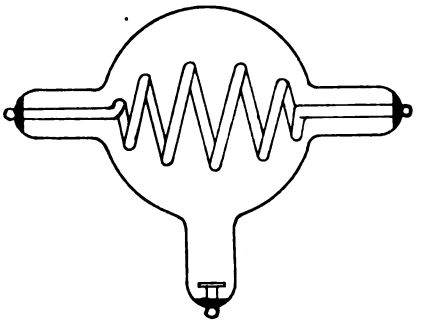

Fig. 12. *The Lodge valve.*

Part VI: Vacuum Arc Rectifiers.

I.—The Arc Discharge in a Vacuum.

WE have noted in Part IV on Arcs at Atmospheric Pressure that the potential drop across the arc terminals is dependent largely upon the ionisation potential of the gas or vapour taking part in the conduction.

This is true also of the vacuum glow discharge, and accounts largely for the use of neon in the glow discharge rectifier. The effect of this factor is greatest under the "constant cathode fall" condition (that holds in this rectifier in the conducting direction) since the cathode fall, which in such cases is the greatest component of the whole P.D., is then determined chiefly by the ionisation potential.

One direction then in which one may naturally look for an improved apparatus is to seek a gas or vapour with a very low value for this ionisation potential.

Referring again to the case of an arc burning under atmospheric pressure, one finds that the matter taking part in the conduction in the arc is vapour of the electrode material. Herein then lies a possible solution to the problem—to combine the conditions of the vacuum discharge with the use of a vapour of a metal or a semi-conductor.

II.—Practical Requirements in a Vacuum Arc.

Working under reduced pressure necessitates enclosure of the discharge in a vacuum-tight envelope ; and it must be remembered that with an arc in action the vapour temperature is at least at boiling point (fortunately this is less under reduced pressure than it is at atmospheric)—the value allowable is limited by the envelope.

Further, owing to the continuous vaporisation of the electrode material, there must be provision for its renewal ; obviously this must take place inside the vacuum chamber. It is found that, owing to the enclosing vessel always being kept cooler than the arc vapour by radiation and convection, the vapour condenses on its inner surface ; therefore the replenishment of the evaporating electrodes may be most easily secured by choosing the electrode material so that it is liquid under the working conditions, and shaping the apparatus so that the condensed liquid drains back to the pools acting as electrodes.

III.—The Mercury Vapour Lamp.

Thus the "mercury vapour lamp" consists of a long glass tube with a pool of mercury in a bulb at each end. In action the vapour conduction takes the form of a "Zeissler discharge of the second type" ; there is a bright glow (the source of the light, and known as the "positive column") filling the bulk of the tube to within a short distance of the negative electrodes (assuming D.C. is used).

In starting this lamp it is necessary to give rise to a supply of vapour that will bridge a path between the electrodes, in other words, to "strike" the arc. This is done by the tube so that mercury from one pool runs along it and makes contact with the other ; on returning the tube to its initial position the mercury column runs back and breaks at a number of points, and there the arc is struck.

Digitized by Google

(In the large sizes of lamps an alternative method is used. A high-frequency alternating electrostatic field is applied to the tube ; this causes ionisation of the residual gas sufficient to produce a more intense glow discharge than is caused by only the normal P.D. being applied to the electrodes.* This relatively strong discharge heats the electrodes sufficiently to start vaporisation on which it changes into the arc type.)

IV.—Mechanism of the Discharge.

We see that there is only one notable difference between the vacuum arc and the atmospheric one—the former occupies a larger volume than the latter for the same power expended : the current density (in the arc itself) and the potential gradient are both smaller, so that the power density in corresponding parts of the two types are in approximately the same ratio as the gas pressures.

Evidently the same discharge phenomena are associated with each of the two types. Thus with a steady P.D. applied to the mercury vapour lamp, there is a fall of potential at the cathode ; this is bombarded by positively-ionised vapour, is in turn heated and emits electrons, which are projected by the cathode fall and maintain the ionisation of the vapour.

V.—Introducing Asymmetry.

As with the atmospheric arc, the conduction may be made asymmetrical by using dissimilar electrodes ; but with the vacuum arc it is much easier to produce a good result. Thus by making one electrode of iron, for example, instead of mercury, it is found impossible to strike the arc with the iron as cathode. The reasons for this also are similar—iron has a higher specific heat and higher heat conductivity than mercury, hence it is more difficult to raise its temperature locally† sufficiently for thermionic emission ; also evaporation will not take place so readily. These effects are both intensified under vacuum conditions : the latter owing to the lower temperature* in the discharge, which while being far below that necessary for iron vapour production is sufficient for mercury.

VI.—The Mercury Arc Rectifier.

A common form of the apparatus is that shown in Fig. 1. It consists of a glass vessel with four main limbs ; in *B* and *D* are the iron electrodes (there must always be more than one for reasons to be given later), and at the lowest point *C* is the mercury pool. *E* is another smaller pool

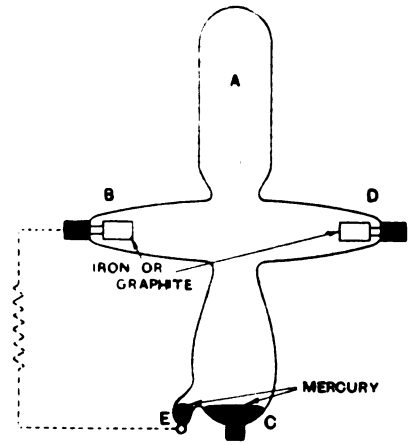

Fig. 1. *A mercury arc rectifier.*

which is connected to one of the iron electrodes through a resistance ; it is used for starting the arc by tilting the mercury into contact in the same manner as for the mercury vapour lamp. The large bulb *A* serves the functions of expansion chamber and condenser for the mercury vapour.

These rectifiers are made also with metal cases for handling large powers. It is not intended here to describe details of construction or operation since these have been given in many recent books and articles on the subject.

VII.—Extinction of the Arc.

It is much easier then to produce a rectifying arc under reduced pressure than it is at higher pressures. Nevertheless, in putting such an arc into practical use certain difficulties arise.

* It has been proved experimentally that at high frequencies a glow discharge will occur in a rarefied gas under much lower potential gradients than those required at low frequencies (which are determined by the ionisation potential).

† A. Gunther Schulze gives the current density at the " cathode spot " as 4 000 amperes/cm.^{2}

* Between 70° and 80° C.

Digitized by Google

The chief of these is due to the extinction of the arc that must of necessity take place when an alternating supply is being used, for the purpose of rectifying it—the P.D. across the rectifying arc terminals falls below the value necessary for maintenance of the arc at least once each cycle, and in the case of a "half-wave" rectification circuit it remains so (not forgetting its sign) for more than half of the cycle.*

Now we have seen that one of the causes of the attainment of a state of equilibrium in any gaseous discharge is the continuous *recombination* of ions that takes place the faster the more intense the ionisation. As soon therefore as the power supply is withdrawn, the ion cloud through which conduction was taking place vanishes with extreme rapidity. Hence for conduction to recommence when power is again applied a fresh supply of ions must be produced, the key to this process being the thermionic emission from the hot cathode.

Owing to the low boiling point of mercury in a vacuum, the cathode "hot spot," which with the arc in operation is at a high temperature sufficient for copious election emission, must consist of a layer either of dense vapour or of superheated liquid (most probably the latter turning into the former). Under these circumstances evidently the hot-spot will cool very quickly on withdrawal of the power, and the rate of decrease of its thermionic emission will be of the same order of rapidity as the rate of disappearance of the ions in the vapour.

The result is that the vacuum arc will not re-strike merely by raising the P.D. again to the value that suffices to maintain the arc, even if the time of extinction is short compared with the time period of a public supply. It is manifestly impossible to use mechanical contact between the electrodes (which would have to be operated in synchronism with the supply), and impracticable to use the high-frequency discharge (for such device would have to be in continuous operation) : the best method of attack on the problem would appear to be therefore to prevent extinction of the arc.

* *Cf.* the oscillograms given in our article, E. W. & W.E., p. 580, July, 1924.

VIII.—Use of Multiple Electrodes.

It was explained in our second article* that it is possible to make one rectifying apparatus perform the function of two by using two electrodes of one kind and a common electrode of the other kind immersed in the same conducting medium.

This property is a result of the fact that in the electrolytic rectifier there described the rectification action takes place *at the electrode* and not in the conducting medium.†

Further, since only one of the kinds of electrode is active, only one kind may be multiplied. In the electrolytic rectifier the electrolyte is normally conducting, and the function of the active electrode is to *insulate* in the non-conducting direction ; hence it is this electrode that may be multiplied : the other kind of electrode may not, since it will permit electricity to pass either into, or out of, the conducting medium.

In the mercury arc rectifier similar conditions hold ; for though it is the arc vapour that conducts the electricity, this conduction is as we have seen essentially dependent upon the active electrode. In this case, however, the medium in which the electrodes are immersed is normally non-conducting ; and since the function of the active electrode is to *produce conduction*, this electrode may *not* be multiplied.

IX.—On Polyphase Supply.

In the mercury arc rectifier therefore only one mercury pool may be used, but any number of iron or graphite electrodes—as many will be used as there are phases in the supply to be rectified.

This arrangement permits us to utilise a further useful property of the arc—that when there is an arc already playing between any two electrodes, the supply of ions produced therein renders an arc "self-striking" with respect to any other pair of electrodes provided the mercury pool is common to each pair. In fact the arc transfers itself to that electrode whose potential is most above that of the common electrode.

* E.W. & W.E., Vol. 2, pp. 783-784. Sept., 1925.

† As it does for example in the gas discharge rectifiers described last month (*see* E.W. & W.E., Vol. 2, p. 982, Dec., 1925).

Digitized by Google

The polyphase rectifier therefore automatically overcomes the difficulty of re-striking the arc. The diagram (Fig. 2) shows the action in the case of a three-phase supply. The only condition to be fulfilled

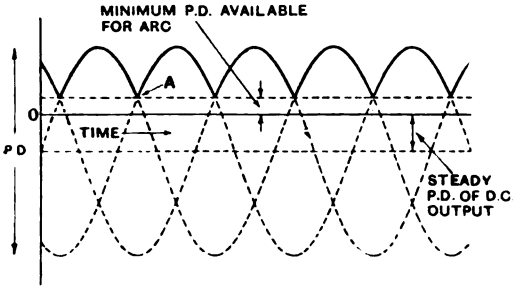

Fig. 2. *Three-phase supply.*

is that the minimum value of the maximum P.D. available between any cathode-anode pair (which occurs when the P.Ds. of adjacent phases become equal, as at *A*, Fig. 2) shall exceed the minimum arc P.D. by a reasonable margin.

Three symmetrical phases is the minimum number that will fulfil the above conditions, as is evident from Fig. 3, which depicts what occurs when two only are used—the maximum P.D. available between either pair of electrodes necessarily falls below zero.

X.—Use of a Choke.

An ingenious way that has been devised to overcome this difficulty is to insert a choke coil in the load or output circuit (*see* Fig. 4). Broadly speaking, its effect is to "smooth out" the P.D. wave.

When the P.D. between one pair of electrodes is falling the arc current between these two tends to fall—this gives rise to a

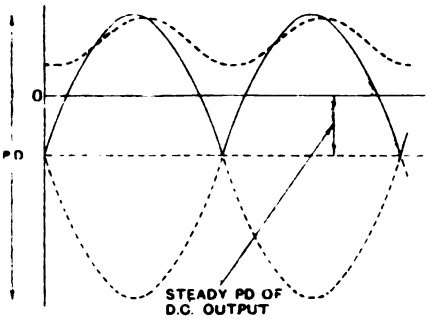

Fig. 3. *Two-phase supply.*

negative potential drop across the inductance, proportional to the rate of decrease of current. The mercury pool thereby has its potential depressed with respect to each of the other electrodes, so that not only is

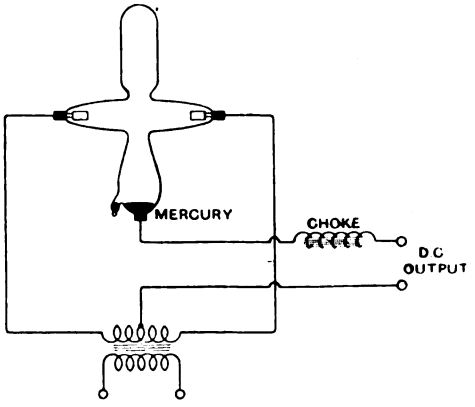

Fig. 4. *Choke in load circuit to smooth the P.D. wave.*

the positive P.D. across the arc maintained for a while but also the third electrode being made more positive to the same degree is the sooner ready to pick up the arc. The heavy dotted curve of Fig. 3 shows approximately the resultant arc P.D.

(*To be continued.*)

Digitized by Google

Curves and Tables for Short-Wave Calculations.

By A. P. Castellain, B.Sc., A.C.G.I., D.I.C. **[R080; 127·3**

NOW that the interest taken in wave-lengths of the order of a very few metres is becoming much more general, it is quite time that amateur experimenters began to introduce a certain element of design into their apparatus for the production and reception of such wave-lengths.

It is all very well in the beginning of things, when one's interest is first aroused, to experiment on the "try it and see if it works" principle, as this gives one an idea of some of the problems to be tackled—but the whole aim of the experimenter should be to produce and use apparatus which does its job in the best possible manner.

He should not be satisfied always with apparatus which just works, but should continually be asking himself, "Can I improve this; if so, how, and if not, why not?" This is just where the element of design, which involves knowledge of fundamental theories, comes in.

The following curves and examples have been worked out by the author in an attempt to help the serious experimenter on short waves.

There have been many expressions evolved for the inductance of a circular ring or loop, but perhaps the most convenient is that due to Kirchhoff:—

$$L=4\pi a\left\{\log_{\epsilon}\frac{8a}{\rho}-1.75\right\}$$

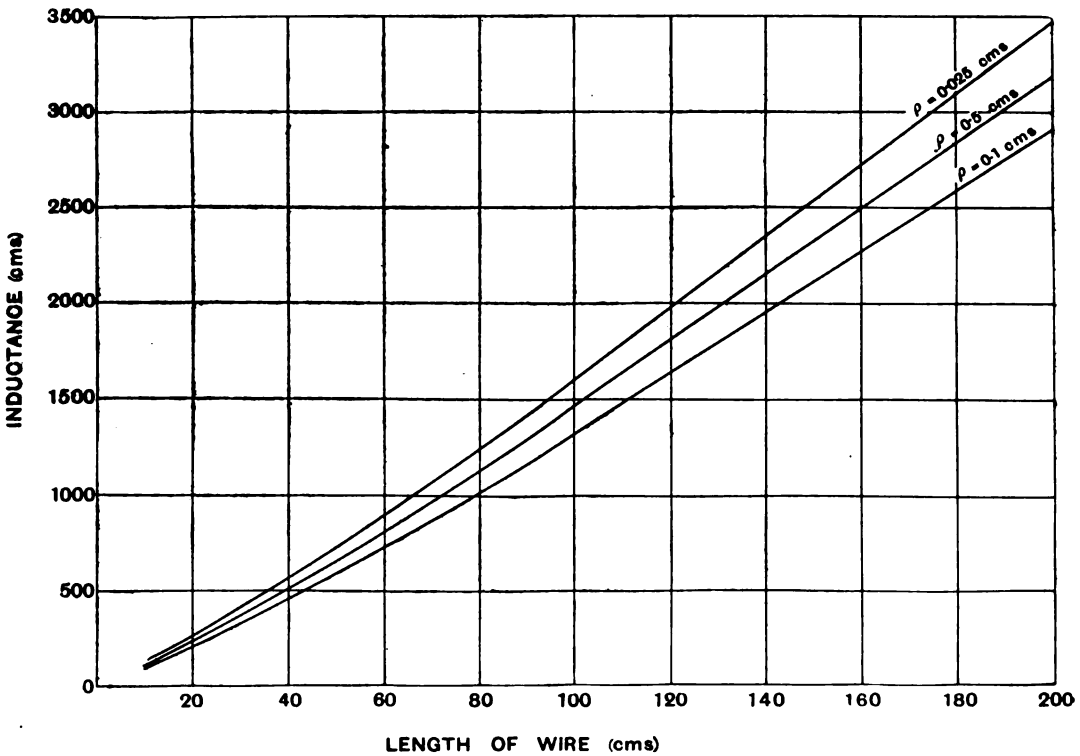

Fig. 1.

Digitized by Google

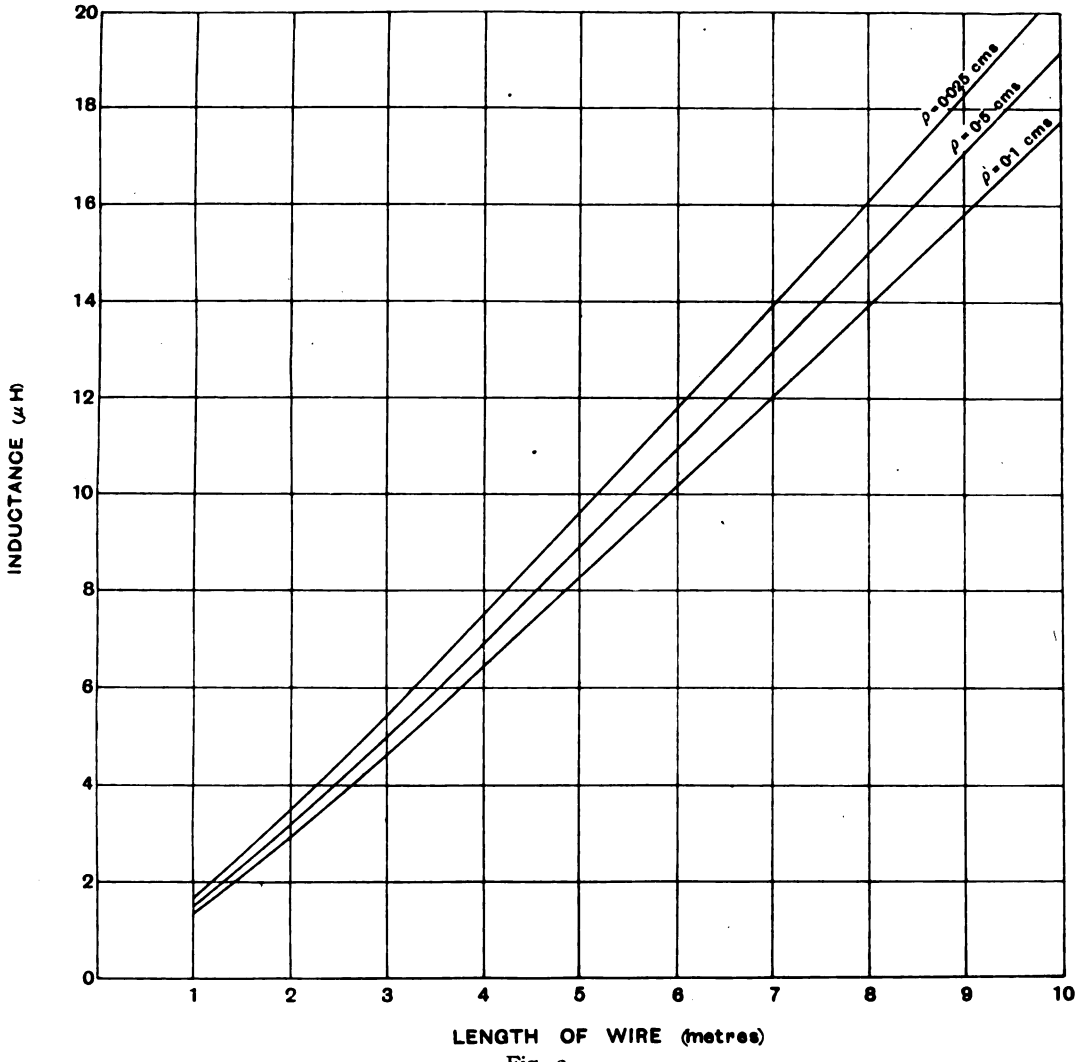

Fig. 2.

where L=inductance of loop in cms.
a=radius of loop in cms.
ρ=radius of conductor in cms.

This formula is approximate, being more correct as the ratio ρ/a is smaller, but it is sufficiently accurate (to less than 1% in the range considered) for our purpose.

As an example, we will find the inductance of a loop of 50 cms. diameter of 14 S.W.G. wire.

Here $a=25$
$\rho=0.1015$ *from Table B*

$$\therefore \quad \frac{8a}{\rho}=\frac{8\times 25}{0.1\,015}=1\,970$$

From Table A.

$1970=19.7\times 100$ $\quad$ $\log 20=2.996$
$\log 1\,970=\log 19.7+\log 100$ $\quad$ $\log 19=2.944$

difference 0.052

$\log 19.7 = 2.980$
$\log 100 = 4.605$

$\log 1\,970 = 7.585$
1.75

$\log 1\,970-1.75=5.835$

$0.7\times 0.052=0.036$
$\log 19 = 2.944$

$\log 19.7 = 2.980$

Digitized by Google

Hence $L = 4\pi 25 \{5.835\}$
$= 1\,832$ cms.
$= 1.832$ microhenries.

Note.—1 000 cms. = 1 microhenry.

The following expression for the Inductance of a square is also due to Kirchhoff :—

$$L = 8a\left(\log_e \frac{a}{\rho} + \frac{\rho}{a} - 0.524\right) \text{ cms.}$$

where a = side of square in cms.
L and ρ as before.

As an example : to find the inductance of a square of 70 cms. side wound with 1 mm. diameter wire.

Here $a = 70$ cms.
$\rho = 0.05$ cms.

ρ/a is small enough to be neglected—it will only make a difference of 8ρ, *i.e.*, 0.4 cms., in the result.

$$\frac{a}{\rho} = \frac{70}{0.05} = 1\,400.$$

$\log 14 = 2.639$
$\log 100 = 4.605$ } *From Table A.*

$\log 1\,400 = 7.244$
0.524

$\log 1\,400 - 0.524 = 6.720$

$\therefore L = 8.70 \{6.720\}$ cms.
$= 3\,760$ cms.
$= 3.76$ microhenries.

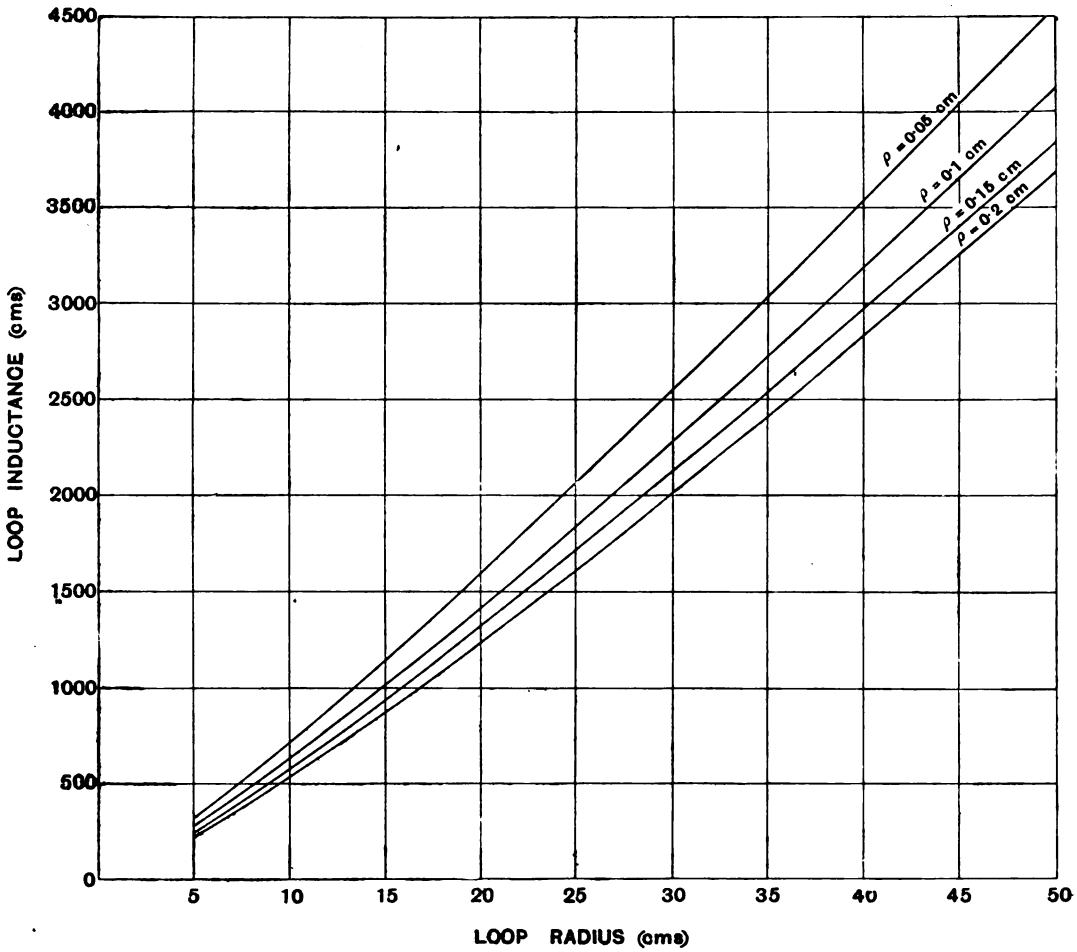

Fig. 3.

Digitized by Google

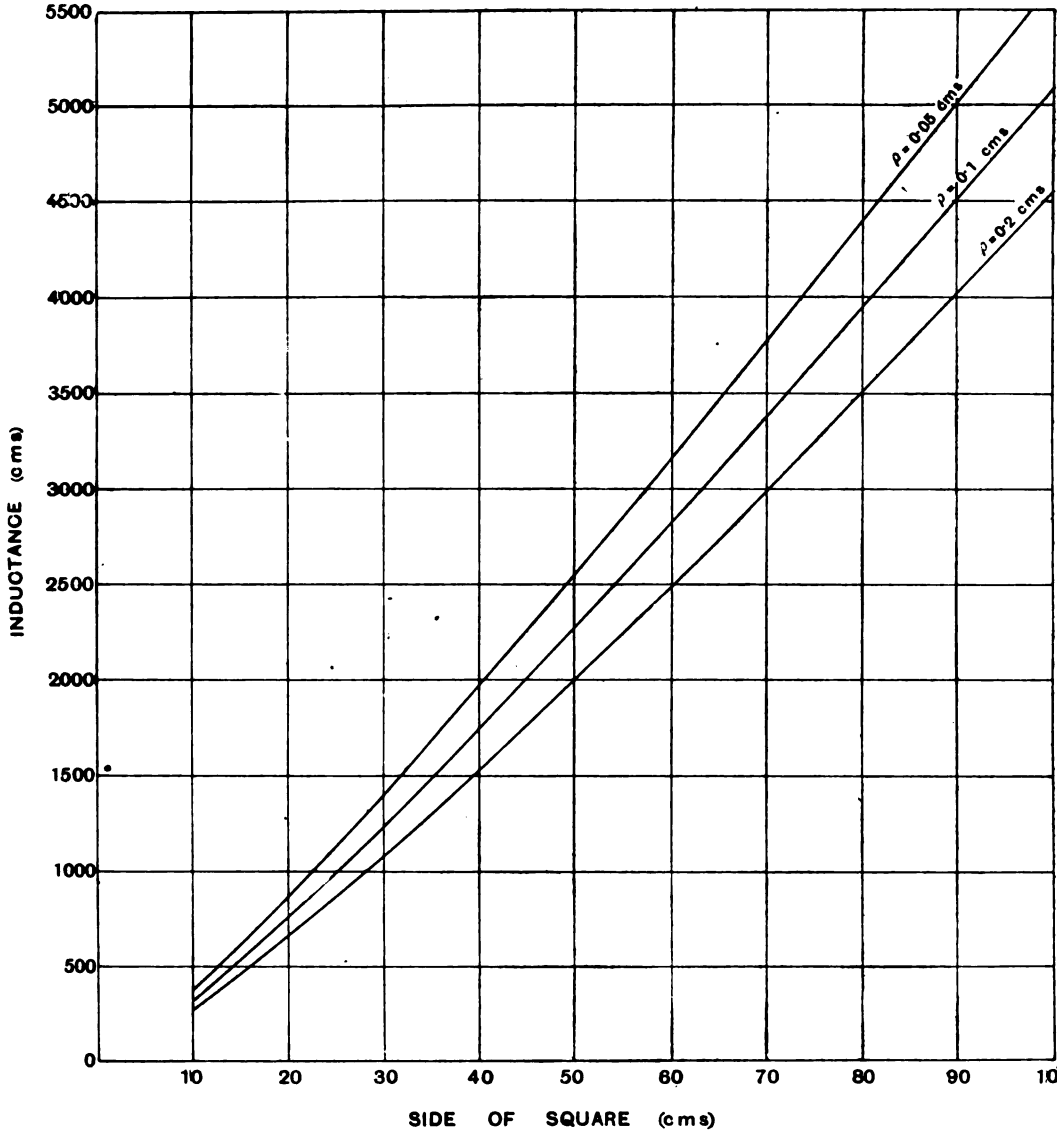

Fig. 4.

The two examples given should be quite sufficient to illustrate the method of working out the various inductance expressions.

However, a series of curves, Figs. 1-4, has been prepared by means of which the inductance of loops may be read off from 10 cms. to 1 metre diameter, of squares with sides from 10 cms. to 1 metre length and of straight wires from 10 cms. to 10 metres, the conductors ranging from 1 to 4 mm. diameter.

The following inductance expressions will be found most useful and easy to use by means of the tables provided :—

Self Inductance of a rectangle, sides a & b.

$$L = 4\left[(a+b)\log_e\frac{2ab}{\rho} - a\log(a+d) - b\log(b+d) - \frac{7}{4}(a+b) + 2(d+\rho)\right] \text{ cms.}$$ (Rosa & Cohen)

where ρ = radius of circular conductor in cms.

Digitized by Google

INDUCTANCE OF SINGLE TURN LOOP.

TABLE I.

Loop Radius a cms.	Inductance in Centimetres.			
	$\rho =$ 0.05 cm.	$\rho =$ 0.1 cm.	$\rho =$ 0.15 cm.	$\rho =$ 0.2 cm.
5	310.4	266.5	241	223
10	707	618	567	531
15	1 137	1 006	930	875
20	1 590	1 414	1 312	1 238
25	2 057	1 840	1 710	1 622
30	2 536	2 275	2 123	2 015
35	3 030	2 722	2 548	2 420
40	3 528	3 175	2 975	2 830
45	4 040	3 640	3 410	3 250
50	4 547	4 110	3 850	3 680

$$L = 4\pi a \left\{ \log_\epsilon \frac{8a}{\rho} - 1.75 \right\} \text{cms.} \quad \text{(Kirchhoff)}$$

where a=radius of loop in cms.
ρ=radius of wire in cms.

INDUCTANCE OF STRAIGHT WIRE.

TABLE II.

Length of Wire l cms.	Inductance in Centimetres.		
	$\rho =$ 0.025 cm.	$\rho =$ 0.05 cms.	$\rho =$ 0.1 cms.
10	113.7	99.8	86
20	255.5	227.5	200
30	407	365.5	324
40	565	510	455
50	729	660	591
60	898	815	731
70	1 068	970	874
80	1 242	1 130	1 020
90	1 418	1 293	1 170
100	1 597	1 459	1 320
125	2 053	1 880	1 706
150	2 515	2 310	2 102
175	2 990	2 750	2 510
200	3 476	3 192	2 916
300	5 450	5 030	4 620
400	7 500	6 945	6 400
500	9 596	8 903	8 210
600	11 730	10 900	10 070
700	13 900	12 920	11 940
800	16.100	15 000	13 900
900	18 300	17 080	15 810
1 000	20 580	19 200	17 800

$$L = 2l \left\{ \log_\epsilon \frac{2l}{\rho} - 1 \right\} \quad \text{(Neumann)}$$

where l=length of wire in cms.
ρ=diameter of wire in cms.

d = diagonal of rectangle in cms.
$= \sqrt{a^2+b^2}$.

Self Inductance of a square with a rectangular sectioned conductor—*e.g.*, copper strip.

$$L = 8a \left[\log_\epsilon \frac{a}{p+q} + 0.2235 \frac{p+q}{a} + 0.726 \right] \text{cms.}$$

(Rosa & Cohen)

where a = side of square in cms.
Section of conductor is $p \times q$ cms².

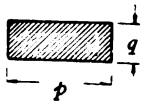

Self Inductance of a square with square section conductor.

$$L = 8a \left[\log_\epsilon \frac{a}{p} + 0.447 \frac{p}{a} + 0.333 \right] \text{cms.}$$

(Rosa & Cohen)

where a=side of square in cms.
$p \times p$ cms²=section of conductor.

Mutual Inductance between two parallel straight wires.

$$M = 2l \left[\log_\epsilon \frac{2l}{d} - 1 - \frac{d}{l} \right] \text{cms.}$$

(Rosa & Cohen)

This is more nearly true as ratio l/d is larger,
where l=length of each wire in cms.
d=distance apart in cms.

INDUCTANCE OF A SQUARE.

TABLE III.

Side of Square a cms.	Inductance in Centimetres.		
	$\rho =$ 0.05 cm.	$\rho =$ 0.1 cm.	$\rho =$ 0.2 cm.
10	385	327	271
15	621	533	455
20	875	764	653
25	1 138	999	860
30	1 410	1 244	1 076
40	1 970	1 750	1 528
50	2 550	2 280	2 000
60	3 150	2 820	2 490
70	3 760	3 370	2 985
80	4 380	3 940	3 500
90	5 010	4 520	4 020
100	5 660	5 100	4 550

$$L = 8a \left\{ \log_\epsilon \frac{a}{\rho} - 0.524 \right\} \quad \text{(Kirchhoff)}$$

where a=side of square in cms.
ρ=diameter of wire in cms.

Digitized by Google

TABLE OF NATURAL LOGS FOR NUMBERS 1 to 100.

TABLE A.

No.	Log.	No.	Log.	No.	Log.	No.	Log.
1	0	26	3.258	51	3.932	76	4.331
2	0.693	27	3.296	52	3.951	77	4.344
3	1.099	28	3.332	53	3.970	78	4.357
4	1.386	29	3.367	54	3.989	79	4.369
5	1.609	30	3.401	55	4.007	80	4.382
6	1.792	31	3.434	56	4.025	81	4.394
7	1.946	32	3.466	57	4.043	82	4.407
8	2.079	33	3.497	58	4.060	83	4.419
9	2.197	34	3.526	59	4.078	84	4.431
10	2.303	35	3.555	60	4.094	85	4.443
11	2.398	36	3.584	61	4.111	86	4.454
12	2.485	37	3.611	62	4.127	87	4.466
13	2.565	38	3.638	63	4.143	88	4.477
14	2.639	39	3.664	64	4.159	89	4.489
15	2.708	40	3.689	65	4.174	90	4.500
16	2.773	41	3.714	66	4.190	91	4.511
17	2.833	42	3.738	67	4.205	92	4.522
18	2.890	43	3.761	68	4.220	93	4.533
19	2.944	44	3.784	69	4.234	94	4.543
20	2.996	45	3.807	70	4.248	95	4.554
21	3.045	46	3.829	71	4.263	96	4.564
22	3.091	47	3.850	72	4.277	97	4.575
23	3.135	48	3.871	73	4.290	98	4.585
24	3.178	49	3.892	74	4.304	99	4.595
25	3.219	50	3.912	75	4.317	100	4.605

TABLE B.

S.W.G.,	Radius ρ cms.
8	0.203
9	0.183
10	0.163 5
11	0.147 5
12	0.132
13	0.117
14	0.101 5
15	0.091 5
16	0.081 3
17	0.071
18	0.061
19	0.050 8
20	0.045 8

Mutual Inductance between two equal loops.

$$M=4\pi a\left\{\log_{\epsilon}\frac{8a}{d}\left(1+\frac{3d^2}{16a^2}\right)-\left(2+\frac{d^2}{16a^2}\right)\right\} \text{ cms.}$$

(Maxwell)

where a=radius of loops in cms.

d=distance between loops in cms.

This formula is sufficiently accurate for distances up to a maximum of about $d=a/3$ cms.

Calibration Department.

THE announcement appeared in our December number that our Calibration Department was temporarily closed for the purpose of the checking of our standard instruments which it is our practice to do periodically. The department will be re-opened on 1st February for the calibration of readers' apparatus in accordance with the rules which will be set out in the advertisement pages of the February issue.

With the commencement of the new volume may we take this opportunity of renewing the request which we have made on previous occasions that all those making use of our Calibration Department will take the utmost care to see that the instruments forwarded for calibration are of such design and construction as to justify the work of calibration. So often in the past we have had sent to us wavemeters and other instruments which were mechanically unsound so that it was impossible to be sure that the calibration would hold good for any length of time.

A very common source of trouble is one which results from the use of cheap and badly constructed variable condensers where there is play in the bearings or where the dial is not rigidly fixed to the spindle and is liable to shift. In order that there may be no likelihood of a strain being put on the dial some designers prefer to use condensers which are free to rotate without stops, but unless the condenser is very well constructed more often than not it is then found that the connection to the rotating plates is not reliable.

By paying attention to the dependability of the instruments that are sent to us for calibration, readers will not only be rendering themselves a service but will be greatly assisting us in the work, whilst in addition it will give us the satisfaction of knowing that our labour is not wasted.

Digitized by Google

Long-Distance Work.

By Hugh N. Ryan (5BV). **[R545·009·2**

READERS will no doubt remember that in last month's article I said I should devote the next to the collected reports of all those experimenters who were working on the question of the relation between weather conditions and the strength and range of signals, together with any theories they had formed from their observations. I have received quite a number of such reports this month, both from amateurs whom I knew to be working on this subject and from others with whose work I was hitherto unacquainted.

Weather Conditions.

Many experimenters, however, have written that they are at present in the midst of their observations, and have therefore asked me to postpone the résumé until next month, so that all the reports may go in together. It also appears that a number of experimenters only started to record their observations when I first mentioned the matter in these columns, and have not yet been working long enough to have any very useful results. In the circumstances, therefore, I shall make the promised résumé the subject of next month's article. I might also mention that Mr. Lewer's article on the transatlantic part of the subject, which appeared in last month's issue, dealt with the matter so completely and well that I am compelled to wait awhile for some fresh facts before I can add much to what he has written, as far as transatlantic work is concerned. I understand, moreover, that he has already quite a useful bunch of observations on longer-distance signals, so between these articles and his we should be able to elicit some sort of a theory.

Nothing of unusual interest has occurred this month, so I will confine this article to a brief survey of the results obtained by our active stations in the course of their usual work.

The "High-Power" Stations.

The higher-powered stations in London and elsewhere have been working the whole world with their usual ease, the only noticeable difference being that every now and then one more station starts using phone in addition to code. Each in his turn sends phone to the ends of the earth with the greatest of ease, and each appears to be astonished at his success (and quite often drops it and goes back to code again).

6LJ, once famous as a station which spent nearly all its time receiving, has, after a very successful period of DX transmission, apparently started to drop back to old habits, and receiving work again seems to predominate. Among others, he has heard four Philippine stations, 28 Brazilians and Argentines, and a Jap. His transmitter, when used, continues to be heard in Australia.

6OP is putting two watts into the London ether, and has worked the remote parts of Europe with it, while 2VS (an old London call-sign with a new owner) has obtained similar results with the same power.

Middlesex must be a wonderful place for reception, judging by the very fine lists I receive each month from those indefatigable listeners, Mr. Guy and the Messrs. Studley. This month both report a large number of South American and Pacific stations, while the latter also report a Chinese station. They recently had the unusual experience of hearing a new Argentine station, sending him a report, and later, hearing him acknowledge its receipt, without any prearranged schedule for listening.

Recent Activities.

6VP has just started up on 45 metres, after a lot of very good DX on the longer waves. As often seems to happen on arriving on short waves, he started with some trouble, but after the loss of two valves he is now working well, though on very low power as yet.

2UD, of Chatham, has recently started DX work, on low power. He has worked the North of Scotland with 5-watt phone.

2XV is another "ex-90-metre" newcomer to short waves, and he has already covered 4 000 miles with the transmitter.

5YK, using about 8 watts, has worked nearly every country in Europe, reaching as far as the North of Norway.

2KK has been following American signals

Digitized by Google

on the very long and very short waves (80 and 20 metres), and sends in a good list. This method of listening should appeal to those who want something of interest and find 45-metre American reception too easy to be interesting.

6TD says that there are apparently no stations left in Wales. He himself finds it usually too cold to work in the early mornings, and when he has been on he has not found conditions very good. He has, however, kept up touch with the world for a few thousand miles around.

5NJ (Belfast) has now worked quite a number of Australians and New Zealanders, and 8QQ of Indo-China.

Chilian CLAA (ex-Ch9TC) is now conducting his work with Argentine MA1 on 48 metres, instead of 89 metres as before. MA1 is still on the longer wave, and both would welcome reports from this country or the Continent.

Will all who have any interesting observations on "weather and signal strength" please let me have them by 10th January, together with DX reports as usual.

Among the Experimental Transmitters.

General Notes.

MR. S. K. LEWER (G6LJ), West Hampstead, is one of several amateurs who report having received signals from the Japanese station 1PP. In his case the signals were heard at 8 a.m. on Tuesday, 8th December, when they must have either travelled 9 000 miles of daylight or taken a curved path of about 14,000 miles of darkness. The Japanese station was later called by New Zealand 2XA.

6LJ has also received NPO, NAJD and 1HR in the Philippine Islands, the South African stations A6N and A6Z, and a station in Tasmania.

New Call Signs and Changes of Address.

We publish below various call-signs and addresses recently received. In some cases, of course, the transmitters may have been on the ether for some considerable time, but have not previously given us particulars of their stations. We take as our basis the list of amateur transmitting stations published in the *Wireless Annual for Amateurs and Experimenters*, and the following names and addresses supplements and corrects that list and appendix, as regards the experimental stations in Great Britain.

We would urge our readers to keep us continually informed of any change in their call signs or addresses and of any new call-signs allotted, in order that we may keep our records as complete and up-to-date as possible. It is generally found that those who are most backward in furnishing information are the first to complain of any omissions or inaccuracies in published lists.

Additional Call-Signs.

2IT B. Walsh, "Clovelly," Victoria Street, Armagh, North Ireland (in place of E. White, St. John's, S.E.8), transmits on 23, 45-90 and 150-200 metres.

2JC G. Sykes, 13, Lingford Street, Gorton, Manchester (in place of 2ADN).

2RK C. St. V. Roper, 7, Yale Court, Honeybourne Road, N.W.6 (in place of A. E. Blackall, Surbiton).

5IR H. Field, 62, Chertsey Road, Woking.

5JD J. L. Wood, Stanhurst, Burntisland, Fife.

5KR C. M. Thorpe, The Crossways, Rhuddlan, North Wales.

5KU R. Pollock, 4, Glenhurst Avenue, N.W.5 (in place of 2APW).

5WP W. E. Russell, 5, Walton Road, Woking (in place of 2AZA and in place of F. A. Wooldridge, Birmingham).

5WV D. Woods, Station House, Braintree, Essex. Transmits on 23 and 45 metres.

5ZG R. P. Hawkey, "Tregenna," Grange Avenue, Woodford Green, Essex (in place of H. Taylor, Colne). Transmits on 45 and 150 metres.

6MW Lieut.-Colonel C. W. Thomas, Clifton House, Old Swinford, Stourbridge.

6VZ A. E. Stephens, West View, Chewton Road, Keynsham, Bristol.

6YV S. F. Evans, 3, Clarence Crescent, Whitley Bay, Northumberland (in place of 2BDY). Transmits on 45 metres.

6YW T. P. Allen, 19, Ardgreenan Drive, Strandtown, Belfast. Transmits mainly on 45 metres.

Changes of Address.

2MD C. Chipperfield, 9, Nacton Road, Ipswich (lately at Oulton Broad).

2TK K. H. Thow, 2, Victoria Road, Eltham, S.E.9 (lately at Tulse Hill).

6TH C. W. Liles, "Morningside," Fields Road, Newport, Mon.

Digitized by Google

From the World's Wireless Journals.

Abstracts of Technical Articles.

R100.—GENERAL PRINCIPLES AND THEORY.

R125.1.—THE DIRECTION FINDING EQUIPMENT AT NITON AND CULLERCOATS.—J. H. Reyner (*J.I.E.E.*, Nov., 1925).

A brief description is given of the Bellini Tosi apparatus installed for ship work at the P.O. stations named. After approximate adjustment by bearings on known fixed stations, the apparatus is calibrated by radiotelegraphic observations on a ship, whose bearing is simultaneously determined by a theodolite. An error curve is thus obtained, and such curves for both stations are shown.

R114.—LES PERTURBATIONS ORAGEUSES DU CHAMP ELECTRIQUE ET LEUR PROPAGATION À GRANDE DISTANCE.—P. Lejáy (*Comptes Rendus*, Nov. 9, 1925).

Expressions are given for the three dimensional co-ordinates of the electric and magnetic fields due to the discharge between two thunderclouds. It is shown that the expression for the electric vectors contains a term which does not return to its original value after the discharge. Simply expressed, the discharge causes a sharp change of electric potential gradient. This manifests itself at considerable distances, and the author states that he has measured such variations of the order of 1 volt per metre at 100 kilometres distance, and of several hundredths of a volt per metre at 400 kilometres. The measurements were made with a valve electrometer in conjunction with a two-valve amplifier with resistance-battery coupling. The theoretical inverse cube law for such a field with distance is approximately confirmed. It is concluded that this sharp change is more harmful to a vertical aerial than to a frame, on account of the small magnetic field associated with it.

R134.—THE RECTIFICATION OF SMALL RADIO FREQUENCY POTENTIAL DIFFERENCES BY MEANS OF TRIODE VALVES. Part I.—F. M. Colebrook (E.W. & W.E., Nov., 1925).

R134.—A DETECTION COEFFICIENT.—J. J. Dowling and J. M. P. Higgins (*Electrician*, 13th Nov., 1925).

It is pointed out that the grid-current—grid-volts characteristic (over the region involved in grid rectification) approximates to the form $\log c = (v_0 + v) \tan \delta$, where δ is the slope of the g.c.—g.v. characteristic. Curves for several different valves are given, $\log c$ being plotted against v. (*cf.* previous abstract.—ED.). It is then shown that the detecting efficiency of the valve can be written $D = S \tan \delta$, and curves are given illustrating the calculating of these two slopes, *i.e.*, those of the anode and grid characteristics respectively. The effect of the grid (leak) resistance is also considered, and it is shown that, within limits, the larger the leak and the more positive the point to which it is connected, the better the rectification. An experimental method (approximately similar to that of the previous abstract) is described for the measurement of the detection given by two valves of calculated ratios $\frac{S_1 \tan \delta_1}{S_2 \tan \delta_2}$, and it is shown that the relation to calculated values is sufficiently close.

R134.4.—RÉGLAGE ET MISE AU POINT DES RÉCEPTEURS A REACTION.—M. Roller (*Onde Elec.*, Oct., 1925).

Smooth control of reaction is referred to as a difficult matter to obtain, and the use of a separate valve for reaction only is suggested. The grid circuit of this valve is in parallel with the amplifier input across the tuner inductance, and its anode circuit contains only a reaction coil back-coupled to the tuner. The advantages claimed are: (1) With reaction from the detector anode in the usual manner, the conditions for detection are not favourable for reaction, and it is advantageous to divide the work between two separate valves; (2) Reaction coming from behind several stages of H.F. amplification, on account of curvature the currents fed back are not proportional to the input nor in phase. With a separate reaction valve a straight line characteristic can be used and strict proportionality obtained.

R140.—LES CIRCUITS POLY ONDES.—L. Brillouin and E. Fromy (*Onde Elec.*, Sept. & Oct., 1925).

The articles deal with the analyses of complex circuits with more than one frequency. It is pointed out that the mathematical study of such multi-wave circuits becomes very difficult with increasing numbers of resonant frequencies. It is shown that these circuits can be analysed by physical and graphical methods obviating complicated and different formula. The method is by considering the impedance curves of simple "parallel resonance" or "stopper" circuits, and the behaviour of the circuit to frequencies on each side of the resonant frequency. The reasoning is extended from a single stopper circuit to a chain of N such circuits of progressively increasing frequency. Complex circuits can all be reduced to the equivalent form of a single $L\ C$ series circuit with more or less complicated stoppers in series with it. The stopper itself may be a simple parallel-resonance circuit, or a complex system capable of being similarly analysed into simple elements. Certain types of circuits are considered generally, and the discussion limited to the circuit of circuits of two frequencies. Eleven such circuits are finally summed up and illustrated, divided into three general classes: (1) Circuits consisting of an inductance and capacity in series with a stopper circuit which may be complex, semi-complex or simple; (2) (A) Two semi-complex stoppers in series with an inductance or a capacity; (B) One semi-complex stopper in series with a simple stopper

Digitized by Google

and an inductance or a capacity; (c) Two simple stoppers in series with an inductance or a capacity; (3) Three simple stoppers in series. It is pointed out that the presentation given permits study of the change from one circuit to another of the same type, and that the principles shown can be extended to many other cases of practical application.

R142.—ETUDE EXPÉRIMENTALE DE LA RÉSONANCE DES CIRCUITS COUPLÉS.—L. Ollat (*Onde Elec.*, Oct., 1925).

The article first discusses the two degrees of freedom which exist with coupled circuits, and deduces expressions for the frequencies and decrements of the two wave-lengths resulting.

Experiments are then described for the determination of these values from resonance methods. Resonance curves were obtained with the use of a quartz fibre electrometer (due to Gutton & Laville). The advantage is claimed for the method (as compared with the more usual thermo-junction) that it does not introduce into the circuits a resistance of any considerable or (more still) of unknown value. A fixed tight inductive coupling (coefficient = 0.957) is first considered, and the curves obtained are illustrated. The values obtained by experiment and by calculation are shown to be in very close agreement. A table for variable inductive coupling is then given, the coefficients of coupling being from 0.64 to 0.052. Measured and calculated values of the two wave-lengths are shown side by side, again in good agreement. Lastly is considered the case of two circuits electrostatically coupled. Expressions are derived for the two wave-lengths in this case, and a table compares measured and calculated values.

R300.—APPARATUS AND EQUIPMENT.

R342.2.—UBER WIDERSTANDSVERSTARKER (RESISTANCE AMPLIFIERS).—M. v. Ardenne and H. Heinert (*Zeitschr. f. Hochfreq.*, 26th Nov., 1925).

A useful contribution to the literature of resistance-capacity amplification. After developing expressions for the voltage release in a resistance-capacity coupled system, the use of a resistance of the order of 1 megohm in the anode circuit is recommended. Tests using such a resistance, actually of 0.82 megohm, are described. The resistance used was tested for stability of ohmic value, curves being given for its performance along with three other resistances which showed considerable change. With a resistance of this value in the anode, a circuital characteristic curve (anode circuit current against grid voltage) shows a length of steep straight on the negative (g.v.) side, rapidly flattening out to horizontal as the grid becomes positive. Such curves are shown for three valves, two being Telefunken three-electrode valves, and the third a Philips dull emitter four-electrode valve. They give respectively a length of completely straight characteristic of (1) ± 5 input volts, centred on —3, with amplification of 10; (2) ± 10 input volts centred on —8, with amplification of about 5; (3) Just over ± 1 input volt, centred on —1, with an amplification of about 60. The arrangement is recommended for L.F. amplification free from distortion, frequency-output curves being given for such a three-stage amplifier compared with several others, transformed coupled. Another point of novelty recommended is the use of .000 3μF coupling condensers (even for L.F. purposes) in place of the customary much higher values. It is also said that the filament can be kept much duller than with the more usual values of anode resistance, the smaller values of both filament and anode current representing economy both of valves and batteries.

R351.—CRYSTAL CONTROL FOR AMATEUR TRANSMITTERS.—John M. Clayton (*Q.S.T.*, Nov., 1925).

The general principles of the Piezo electric crystal are first stated, with its use as an oscillator or resonator. A description then follows of the preparation, mounting, etc., of the crystal. The application of the crystal to an oscillating circuit is then shown, followed by the application of the system to a transmitting aerial, as a "master oscillator." Illustration and description is also given of the use of a crystal with a two-valve transmitter using self-rectification to give full wave rectification from a 60 cycle supply. It is stated that the tendency of the crystal to remain in oscillation helps to smooth the intermissions of the supply voltage, giving a steadiness of received note equal to a pure D.C. supply. An extension of this system is shown, adding a power amplifier also supplied by the same A.C. transformer to the previous transmitter.

The article concludes with general remarks on the care and general handling of the crystals.

R.351.—NAVY DEVELOPMENTS IN CRYSTAL CONTROLLED TRANSMITTERS.—John M. Clayton (*Q.S.T.*, Nov., 1925).

A short description of the work done at the U.S. Navy Research Laboratory at Anacostia, D.C., on the control of transmitter frequencies by Piezo-electric crystals. The first attempt was a 5-watt crystal controlled oscillator followed by power amplification to give 10 watts in the aerial on a wave-length between 500 and 1 000 metres. The gradual increases of power later effected are described, the latest set achieved being one which deliver 10kW to the aerial at 25.5 metres. The crystal actually works at 51 metres, the first intermediate power amplifier acting as a frequency doubler. Information as to power supply and general arrangements is given. A 71.3 metre transmitter, crystal controlled, is also described. This normally delivers 10kW to the aerial, but it has at times been used for nearly 15kW aerial outputs.

R355.5.—THE RAYTHEON RECTIFIER.—M. Pennybacker (*Q.S.T.*, Nov., 1925).

After discussing certain fundamental principles of conduction through gas, this article shows the application of the principles stated to the design of the Raytheon Rectifier Tube. This tube is intended to give double wave rectification from an A.C. supply for receiving H.T. voltage. A large cathode supplies two anodes, each dealing with the opposite half-waves. The discharge points of the anode are very small and are within the inner hollow of the

Digitized by Google

cathode, from which they are separated by a very short distance (whose value is not stated). A circuit diagram with filter details is given, also a curve showing the variation of output voltage with load current. It is stated that under continuous operation at 50 milliamperes there has been no sign of diminishing life after 10 000 hours.

R374.1.—Some Recent Research on Crystals. J. P. McHutchison and G. T. MacLeod (E.W. & W.E., Nov., 1925).

R388.—Measurements in Electrical Engineering by Means of Cathode Rays.—Prof. J. T. MacGregor Morris and R. Mines (*J.I.E.E.*, Nov., 1925).

An extensive survey of the present position of the cathode ray tube, both from the point of view of the instrument itself, and of its application to practice.

The paper is divided into three parts and an Appendix.

Part I. first deals with two dimensional methods of measurement, more particularly oscillographic and cyclographic. In the former only one of the components is under the control of the unknown variable quantity, the second component having the sole function of introducing the time co-ordinate. In the latter method each of the components is under the control of the variable, although commonly one is controlled so that it is a known function of time. The paper then deals with the development of instruments for delineating rapidly varying quantities, leading up to the use of the "jet" principle and to the production of cathode rays in vacuum discharge. The general phenomena of discharge through gas of diminishing pressure are discussed and well illustrated by a table summarising the effects from an atmosphere down to 1-10 millionths of an atmosphere. Next are reviewed the generation of cathode rays and their application to electrical measurements, more especially their amenability to deflection by electrostatic and magnetic fields. Part I. concludes with an account of the development of the jet or pencil of cathode rays, illustrated by earlier cold cathodes (Thomson and Braun) and by the development of the heated (Wehnelt) cathode.

Part II. covers the development of the electron jet instrument. It is largely historical, giving illustrations of various types of cold cathode, leading up to the modern cold-cathode oscillograph of Dufour. The heated cathode is then reviewed, with illustrations and information of the former lime-spotted cathode, and the bare tungsten (Coolidge) and the coated filament (Western Electric) type. Methods of focusing the jet are then described, divided into (A) electromagnetic, *e.g.*, focusing coil; (B) electrostatic, including the ionic arrangement of the W.E. tube, and (C) geometric. Indicating and recording are discussed from the use of a fluorescent screen with visual observation or external photography to the use of internal photographic plates. Time scale systems are then discussed with illustrations, more particularly of some of Dufour's classical methods of obtaining records of high and very high frequencies.

Part III. briefly reviews limitations and directions for improvement, the greatest need voiced being that of improved deflectional sensitivity.

The Appendix (by R. Mines) is chiefly mathematical, and contains some useful expressions for the deflection of a jet by electrostatic or magnetic means, with series curves facilitating determinations of these for electron beams produced under different accelerating voltages.

A very complete bibliography covering tube technique and applications is appended.

R388.—The Cathode Ray Oscillograph.—Dr. A. B. Wood (*J.I.E.E.*, Nov., 1925).

The advantages of the cathode ray oscillograph are briefly stated, followed by a note on cathode rays, with expressions for their velocity, deflection in an electrostatic field and deflection in an electromagnetic field. The paper then discusses voltage, current and photographic sensitivities, with a table showing the penetrating power of the rays according to their accelerating voltage. Three recent commercial forms of oscillograph are described. These are (A) The high voltage—*circ.* 60 000v.—cold cathode tube of Dufour; (B) The medium voltage —3 000v.— tube due to the author; (C) The low voltage—300v.—tube of the Western Electric Company. These are discussed under the headings (i.) Electrostatic sensitivity; (ii.) Magnetic or current sensitivity; (iii.) Photographic sensitivity; (iv.) General. The author's statement of the respective ratios for the first three can be tabulated as follows:—

	Accelerating Voltage.		
	30 000	3 000	300
(i.)	1	10	100
(ii.)	1	$\sqrt{10}$	10
(iii.)	1	10^{-2}	10^{-4}

The paper concludes with a brief statement of a few of the many applications of the cathode ray oscillograph, with illustrations showing records made by each of the three types discussed.

R388.—The Use of the Cathode Ray Tube as a Wattmeter and Phase-Difference Measurer for High Frequency Electric Currents.—Prof. J. A. Fleming (*J.I.E.E.*, Nov. 1925).

The paper gives expressions for the closed curve (*e.g.*, an ellipse) obtained when two E.M.Fs. of the same frequency and of a constant phase difference are simultaneously applied to the two pairs of deflecting plates of a cathode ray oscillograph, that of the Western Electric Company being specifically mentioned. It is shown that if one deflection be due to high frequency current, and the other to the voltage producing the current, the trace of the spot can be used to find the phase difference between the two, and therefore the power expended in the circuit, the arrangement becoming an H.F. wattmeter more convenient than any electrostatic quadrant form.

Digitized by Google

Correspondence.

Letters of interest to experimenters are always welcome. In publishing such communications the Editors do not necessarily endorse any technical or general statements which they may contain.

Transformer Curves.

The Editor, E.W. & W.E.

SIR,—I have followed with interest the correspondence with reference to transformer curves. I have carried out very considerable experimental work with many low frequency transformers, and find that there is no appreciable change in amplification between input voltages of .01 and .07 volts, thus agreeing with the figures given by Mr. P. W. Willans.

This disposes, I think, of Mr. Appleton's contention, and my considered opinion is that any amplifier, to be reasonably perfect, should amplify all frequencies between 50 and 10 000 cycles equally. This is somewhat difficult to attain, but no doubt the British Broadcasting Company in their transmissions approximate closely thereto.

I am glad to see Mr. H. H. Dyer's letter asking for information on the amplification of transformers beyond the ranges usually given. I enclose herewith a leaflet giving the amplification curve of a make of transformer in which I am interested as designer, for the range of frequencies from 50 to 8 000. As there will probably be difficulty in finding space to reproduce these curves in your journal, the following figures may be of interest :—

The measured amplification of this transformer with a D.E.R. valve is—

17	at	50	periods per second.	
24	,,	100	,,	,, ,,
32·5	,,	300	,,	,, ,,
33·3	,,	500	,,	,, ,,

keeping at this value until a frequency of 6 000 is reached. At this point it falls off slightly till at 8 000 it is 30.

I consider that this transformer is a great step towards perfection, approaching in properties the transformers used by the British Broadcasting Company, referred to in the last-but-one paragraph of Mr. H. L. Kirke's letter. A. B.

The Editor, E.W. & W.E.

SIR,—Mr. W. A. Appleton in his letter in your November issue states that "when the input energy applied to a transformer is below a certain value, the amplification factor practically disappears. . . ." This statement, if correct, certainly has an important bearing on the operation of intervalve transformers in practice. But is there any experimental evidence for this? If so, it would be of great interest to have it set forth.

If it were so, it would mean that the permeability of the iron fell away to an exceedingly small value at very low inductions. This, however, does not appear to be the case. Tests made on a certain type of transformers, in which I am interested, down to one millivolt across the primary, show the maintenance of high impedance (and ratio). Further, permeability measurements at so low an induction density as one gauss (or 1 line per sq. cm.) indicate that the iron maintains a permeability in the neighbourhood of 300 at vanishingly small A.C. magnetic forces. C. D.

The Editor, E.W. & W.E.

SIR,—I am astonished at the number of correspondents who disagree with my contention regarding L.F. transformer performance having minute input values.

I regret that the curves of P. W. Willans were not published, as from the editorial note they showed no change in amplification with strength between input voltages of .01 and .035 volts. If these figures as produced in the editorial note are correct, I do not regard them as having much effect upon my theory, as these values are well within the limits of laboratory measurements and are many times greater than the values I have been considering and which in my opinion are all important.

There is one suggestion I would like to make to these correspondents, and this is, that they should compare the amplification factor of resistance capacity coupling against a similar number of stages of transformer couplings, for inputs at various frequencies which can be reduced well below initial audibility, using any well-known make of L.F. transformer. My experience has shown me, that where a transformer-coupled amplifier has a higher amplification factor for a fairly reasonable value of input than a resistance-capacity-coupled amplifier, with much smaller values of input, the amplification factor of the transformer-coupled unit will become gradually decreased and a point can be reached where the resistance-coupled unit amplifies to a greater extent than the transformer-coupled unit.

Dr. H. Kröncke, in the issue of 23rd September of the *Wireless World*, quotes Manfred von Ardenne and H. Heinert and makes the following statement :

> "The fact that the old transformer amplifiers have a fairly large consumption of power was made manifest by the consideration that a transformer with an iron core cannot be worked by a current below a certain strength."

It is owing to the above fact that it has always been considered, in telegraph receivers, better to employ the air core choke or resistance-capacity-coupled stage before an iron core L.F. transformer-coupled stage where distinctly inaudible signals are to be amplified.

An interesting experiment can be made in testing this theory by reversing the position of two such

Digitized by Google

units in an amplifier designed for one resistance-capacity coupling and one L.F. iron core transformer coupling. It would be of no use, however, if relatively strong signals only were used when making the test.

Neglecting for the moment the application of transformers to valve circuits, I would ask each of those correspondents if the losses in iron core transformers are proportionate to the input and output values? Furthermore, statements are made from time to time as to certain transformers, which possess a straight line curve, in fact, almost straighter than that which can be drawn by means of the common ruler. In order to produce such a straight line, it is essential that the constants of the transformer can adapt themselves to each frequency which is applied to its terminals. Theoretically, the inductive reactance, stray capacity reactance and other factors must bear some constant relation to the valve impedance with which it is used, for *any frequency* between the points chosen. In other words *non-reactive*! How this state of affairs is obtained I must confess I do not know, as I have submitted various alleged straight line curve transformers in sealed boxes to independent authorities and the results given by them have not coincided with the straight line curve originally attributed.

Have my critics a formula which produces one set of suitable transformer characteristics *constant for all frequencies* and therefore makes possible a definite design which will produce a straight line curve?

I should like to state that we have wound almost every conceivable form of transformer coil with a view to arriving at what we consider the best compromise, as a suitable compromise according to the natural order of things is all that can be hoped for up to the present.

I am afraid that the anecdotes of our old antagonist W. D. Owen are not helping to solve the problem, and unfortunately as I am personally representing a commercial company, I have to suspect the presence of vested interests in some of the criticisms.

With regard to W. D. Owen's conclusion that a debate should be arranged in public, this I am afraid is impossible unless the commercial interests of all the persons conducting the debate could be completely eliminated.

Regarding the last paragraph of Mr. Kirke's letter, all readers will be amazed to hear a B.B.C. staff member recommend the elimination of the already too weak low notes in order to level up the overall reproduction.

With special reference to Mr. H. H. Dyer's remarks, I think, after a little misunderstanding regarding reference to harmonics is cleared up, that I may state that his views seem to me similar to our own, and as expressed are the most reasonable.

Whether our theory is correct or not, or whether the curves are applicable in their fullest meaning or not, is of secondary value to this all-important point, and this is, are the transformers which result from these theories of any value, or are the manufacturers obtaining the purchasers' money under false pretences?

W. A. APPLETON.

Screening of Small Variable Air Condensers.

The Editor, E.W. & W.E.

SIR,—I should like to make a comment upon Mr. D. A. Oliver's article "The Screening of Small Variable Air Condensers" in the December issue of your Magazine with reference as to whether the screen should be earthed, connected to either of the sets of plates, or left insulated.

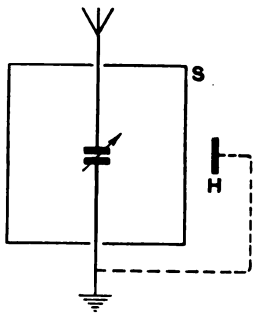

In my opinion the best is to earth the screen in all cases, for the following reasons: In wireless receivers the main object of screening a condenser is to ensure that the capacity both between the two sets of plates and between them and earth shall remain constant for a given setting, irrespective of the variable proximity of any conductor, such as the human hand. Taking the case of the condenser in a parallel-tuning aerial circuit as an example, one set of plates is connected to earth and the other to the aerial. When there is no screen the capacity to earth is increased as the hand, etc., which is at earth potential, is brought nearer. When there is a screen either insulated or connected to the aerial set of plates the effect is as with no screen but slightly increased. This is shown in the figure, where *S* is the screen and *H* the operator's hand. When the screen is insulated the aerial plates have a fixed capacity (for a given setting) to *S*, which has a variable capacity to *H*, *i.e.*, to earth. Thus the aerial-earth capacity can vary by moving *H* without the setting of the condenser being varied. This effect is increased if the screen is connected to the aerial. If however the screen is earthed the proximity of the hand can make no difference, for it is at the same potential as the screen.

In the case of anode condensers and all other condensers the same argument holds and it would therefore seem advisable to earth all screens in whatever part of the circuit they may be used.

There is a problem that has been puzzling me for some time that would also probably interest your readers. Perhaps we could have an article explaining it in the near future.

The question is: How does the series variable condenser tune a receiving aerial circuit?

I am still looking forward to the series of articles on elementary circuit calculations and on setting up a wireless laboratory promised in the March Editorial and hope they will soon appear, as well as some articles on special branches of mathematics as hinted in the same Editorial.

R. KAY GRESSWELL, F.R.A.S.

Lynn Garth,

Grange Road, Southport.

Digitized by Google

Patents.

The Editor, E.W. & W.E.

SIR,—With reference to your notes under "Editorial Views" (Dec. E.W. & W.E.), it is apparently wrong for anyone to construct a set (infringing patents) for musical entertainment. It appears to me that there must be some thousands of people who have built their own sets and how were they to know what patents were in force and what not? I quite appreciate your views, but doubtless your intended article by a patent agent will throw much light on the "constructor's" position. If articles are published containing instructions, "How to build a ——" and this include certain patents, there seems to be no reason why such sets cannot be built by the amateur, and this is in opposition to your statement.

With reference to your notes some time ago *re* instruction in mathematics, I should like to say that I am very much in favour of such articles being given. I have made extensive search but I have not yet come across a textbook suitable for use with wireless. I am aware that an outline of mathematics can be obtained from elementary textbooks, but their direct application to matters radio seems to present some difficulty at first. Take, for example, the excellent series of articles by F. M. Colebrook; some knowledge of mathematics is necessary for a complete understanding, and some lines of reasoning seem too deep to follow and have to be taken for granted or put aside as unintelligible. This, of course, may not be everyone's opinion, but to my mind some articles of this type would be greatly appreciated by many.

Trusting that this suggestion may be of some use, and wishing the E.W. & W.E. every success.

C. F. SCALES.

Sunnyside, Oxney Green,
Writtle, Essex.

Abstracts in Esperanto.

The Editor, E.W & W.E.

SIR,—In your last issue you had an admirable "leaderette" entitled "Why we give space to Esperanto." In your remarks you stated that the articles and abstracts now appearing are not primarily intended for British readers, but were provided for your many foreign readers, and you mentioned that possibly in the future there would be an international arrangement amongst leading wireless technical journals in different countries to publish Esperanto abstracts of their own contents.

In this connection may I be permitted to refer to an important Congress which has recently taken place in Paris. It was the first International Congress of the Technical Press, under the patronage of the President of the French Republic. Delegates from the most important technical gazettes in a number of countries took part in the discussions, amongst which was one entitled "Should the technical Press favour the development of Esperanto, the International Language?"

A special commission was appointed to consider this question under the Presidency of M. André Baudet, Member of the Paris Chamber of Commerce. The report of this commission was duly presented to the Congress, and after a discussion the following resolution was carried:—

"Considering the very favourable results to Esperanto of the Congress which took place last May in Paris, attended by delegates of 171 Chambers of Commerce, 10 Governments, 14 commercial fairs, and 208 business enterprises belonging to 33 different countries, as well as the representatives of more than 140 scientific and technical institutions belonging to some 20 countries;

"Considering the great difficulties encountered in dealing with publications on account of the increasing number of technical and scientific works published in various languages;

"Considering that an international language commonly used, whether for the editing of original articles, or at least for the publication of abstracts of articles, would simplify considerably the work of documentation;

"Considering that Esperanto, the use of which has penetrated into commercial circles, thanks to its qualities of clarity, simplicity, and richness of expression, appears to be easily adaptable to the needs of technics and science;

"The first International Congress of the Technical, Commercial, and Agricultural Press resolves:

"1. That Esperanto should be used in the Technical Press at least for the publishing of abstracts, which should follow the publication of all articles and original works in journals and reviews of the whole world;

"2. That Esperanto should be accepted as an official language on the same level as the national languages, in the International Congresses of the Technical Press."

17, Chatsworth Road,
London, E.5.

HARRY A. EPTON,
Secretary.
Internacia Radio-Asocio.

Howling in Short-Wave Receivers.

The Editor, E.W. & W.E.

SIR,—With reference to Mr. Robinson's remarks on the howl in short-wave receivers (p. 770). Compare E.W. & W.E., p. 323, March, 1924. Independently, I described this in February, 1925, in *Revista Telegrafica*, of Buenos Aires, giving the same explanation. There is no doubt that the howl is built up of the clicks caused by entering and leaving oscillation.

The remedies are to increase reaction; decrease the grid-leak value, and (sometimes) touch some part of the circuit (in many case, the filament rheostat of the L.F. valve). This is only the case when wearing headphones, but the howl is not troublesome with loud-speakers. (The reason for this is obvious, but I am not satisfied with any explanation I have built up as regards the occurrence on *short* waves only.)

With reference to p. 773, the signals of this station on 48 metres are very weak (R2-3) to Ch2LD and strong (R7-8) to Ch4RM. Both receivers are in the city of Santiago, some 50 miles away.

R. RAVEN-HART, M.I.R.E. (Ch9TC.)

Los Andes,
Chile.

Digitized by Google

Some Recent Patents. [R008

AN ELECTRICAL ALLOY.

(*Application date, 11th June. No.* 240,895.)

The composition of what appears to be a very useful electrical alloy is described in the above British Patent by the Western Electric Company, Limited. The alloy is intended for the manufacture of contacts, which are normally subjected to considerable frictional wear, and also arcing, such as the wiping type contact. Accordingly, the alloy is of a phosphor bronze nature, being composed chiefly of copper to which is added 4 to 5½ per cent. of tin, and from 1 to 4 per cent. of lead and a trace of phosphorus. The specification states that a wiping contact made of this alloy shows little effect of wear and tear after 5 000 000 make-and-break operations, whereas with a normal bronze spring it is useless after about 3 000 000.

A VALVE COOLING DETAIL.

(*Convention date* (*Holland*), *24th January*, 1924. *No.* 228,130.)

A rather interesting point in connection with the cooling of high power valves is disclosed in the above British Patent granted to N. V. Philip's Gloeilampenfabrieken. It is well known, of course, that the anode of a high power water-cooled valve is at a very high potential with respect to earth, and means have to be provided for insulating the cooling system in some way or other. In some cases the cooling water is broken up into a fine spray so as to present an infinitely fine resistance. In another method the cooling water is supplied through very long thin insulating tubes. It has been found, however, that a certain amount of leakage results which produces electrolysis, particularly at the outer surface of the anode, which becomes oxidised, and is liable to be rendered porous, and thus useless. A rather ingenious method of overcoming this difficulty is shown in the accompanying illustration. It will be seen that a water-cooled anode *A* of a high power valve *V* is located within a chamber *C* containing the cooling water *W*. The cooling water is supplied through an earthed metal tube T_1, which communicates with a long rubber tube R_1, the outlet of the system being through a similar rubber tube R_2 and an earthed metal tube T_2. Instead of connecting the ends of the rubber tubes directly to the water jacket, metal tubes *M* are inserted, and these are connected as shown to the metallic water jacket *C*. For all practical purposes the potential of the anode *A* and the water *W* in the jacket *J* and the metal tubes *M* is the same, and thus any electrolytic action which may occur will be confined to the metal tubes *M*, since they are nearer the earthed tubes *T*. Thus if any electrolysis occurs the tubes *M* can readily be replaced without any material cost or damage to the expensive valve.

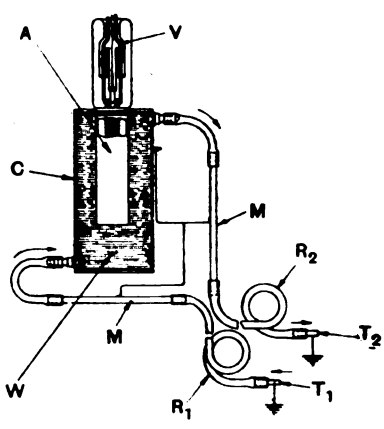

AN INSULATING MATERIAL.

(*Application dates, 31st July*, 1924, *and 20th January*, 1925. *No.* 241,993.)

The composition of an insulating material which would appear to be of use for certain wireless purposes is described by C. Pickstone, J.P., in British Patent No. 241,993. The composition is composed essentially of powdered slate, rubber, bitumen, and vulcanising material such as sulphur. The composition is prepared by mixing slate waste, which is finely powdered, with similarly treated rubber and bitumen. The ingredients are mixed together and heated, after which the sulphur is added, when vulcanisation is carried out to the desired degree of hardness. It is stated that the resulting composition can be buffed or polished, or given a matt surface, and can also be combined with colouring matter. It would be interesting to examine the electrical properties of this composition, as it is very difficult to predict how it will perform from a knowledge of its separate constituents.

A SCREENED AERIAL SYSTEM.

(*Convention date* (*Germany*), *11th September*, 1923. *No.* 221,825.)

A selective method of reception depending upon the screening of an aerial system is disclosed in British Patent No. 221,825 by the Telefunken Gelleschaft für Drähtlose Telegraphie M.B.H. The arrangement is indicated schematically in the accompanying diagram. It is assumed that the desired signals are coming from the direction *D*, and are to be received on the aerial system A_1, L_1, C_1. It is further supposed that the unwanted signals are coming from the direction *U*. Accordingly, another aerial system A_2, L_2, C_2 is arranged so that the aerials A_1 A_2 and the direction of the unwanted station lie in the same plane. The aerial

Digitized by Google

circuit A_2 is very critically tuned to exactly the same frequency as that of the aerial circuit A. The two are coupled together by an intermediate aperiodic circuit I. It states in the specification that it is very important that the phase of the two circuits be accurately adjusted. When the disturbances from the direction of U fall on the aerial

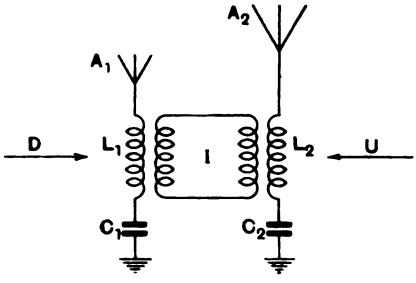

system the system A_2 screens the system A. Another important detail of the invention is that the aerial A_2 is less than a quarter of a wave-length from the aerial A, which enables the system to be located within a small area. No extensive details are actually given in the specification of the manner in which the scheme operates.

A MULLARD FILAMENT.

(*Application date, 1st August*, 1924. *No.* 241,996.)

An interesting dull emitter filament is described by S. R. Mullard and The Mullard Radio Valve Company, Limited, in British Patent No. 241,996. Briefly, the invention consists in forming a dull emitter filament in the form of a tube of highly active material which is slipped over a wire support which is used as a heating device. One form of the filament is made in the following manner: The foundation or core is of tungsten wire, which is drawn in exactly the same manner as an ordinary filament. The coating or tube is built up from a mixture of molybdenum or tungsten powder with 6 or 7 per cent. by weight of thorium. This may be mixed into a paste and squirted through a die, after which the resulting tube is heated to a high temperature and sintered in an atmosphere of hydrogen. The tube thus formed is slipped over the tungsten wire core which is suitably adjusted in size and used as a supporting medium. It is stated in the specification that it is only necessary to heat the core to a very moderate temperature in order to obtain sufficient electronic emission from the prepared tube.

CONTROLLING RETROACTION.

(*Application date, 21st July*, 1924. *No.* 241,618.)

A method of controlling retroaction is described in the above British Patent which has been granted to P. W. Willans. It is well known that the effect of retroaction is to overcome or neutralise the effective resistance of a circuit. Instead of varying the degree of retroaction between the anode and grid circuits of a valve receiver, the method indicated in the accompanying illustration is employed. It will be seen that an aerial circuit consisting of C_1L_1 is connected between the grid and filament of the valve V. The anode circuit contains the usual reaction coil L_2 and the telephones T. In addition, a variable resistance R is shown connected across the input circuit. It will be obvious that the ohmic value of this resistance will control the amount of retroaction necessary to bring the system to the point of oscillation, or in other words will

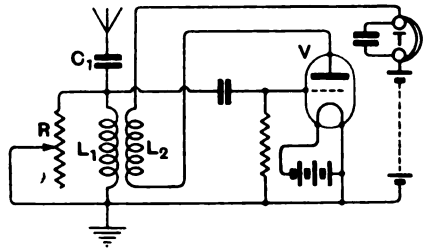

determine the amount of coupling necessary between the coil L_1 and the coil L_2. Thus it will be seen that it is possible to fix the coupling between the two inductances, and merely vary the retroaction by adjusting the value of the resistance R. Readers will know, of course, that the idea of varying the degree of retroaction by means of an adjustable resistance is quite old, a receiver operating by virtue of this principle having been described in the earlier issues of E.W. & W.E.

A VIBRATING ELECTRODE.

(*Application date, 9th July*, 1924. *No.* 240,920.)

A rather peculiar valve is described in the above British Patent by E. T. Fisk. The object of the invention is to control the anode current of a thermionic valve by mechanically varying the position of the control electrodes with respect to the filament. The specification is fairly detailed, and describes several alternative embodiments of the invention, but that shown in the accompanying illustration serves to indicate the novelty of the idea. It will be seen that a valve V contains the usual filament F and a gap or semi-circular anode A and a particular form of grid or control electrode G. This is attached by a link L to an armature R which is supported on a resilient member M. The armature R, which is within the valve, is in close proximity to the glass wall, against which is placed an electromagnetic winding W. Thus it will be seen that currents passing through the winding W will attract the armature and cause the control electrode to vibrate, thereby modulating the output of the valve. In another

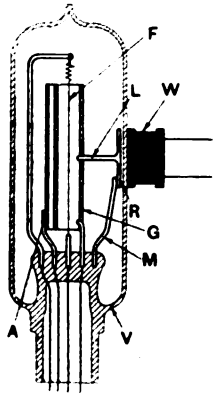

Digitized by Google

modification the control electrode is caused to vibrate simply by the sound waves impinging upon the surface of the wall of the valve, which can be specially constructed for that purpose in the form of a tympanum.

SELECTIVE FILTER CIRCUITS.

(*Convention date* (*U.S.A.*), *9th August*, 1924. *No.* 238,211.)

It is well known that it is possible to obtain almost any degree of separation of currents of various alternating frequencies by means of filter circuits, such as high pass filters, low pass filters, and band filters, comprising essentially inductances and capacities arranged in T or $T\pi$ formation. A method has been patented by the Westinghouse Electric and Manufacturing Company in the above British Patent No. 238,211. It is well known that the effect of the resistance upon the attenuation of a filter section depends upon the ratio of $2\pi fL$ and R and is given by the ratio $2\pi fL/R$. Obviously, then, by reducing the resistance greater efficiency is obtained. It is, further, well known that the effective resistance of a circuit can be reduced substantially to zero by connecting it

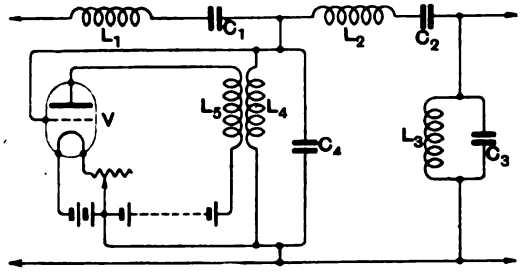

to a negative resistance device such as a retroactively coupled thermionic valve. Thus in the accompanying illustration, which shows a π section filter, we have the ordinary circuits L_1 C_1, L_2 C_2, L_3 C_3, and L_4 C_4. The circuit L_4 C_4, however, is connected across the grid and filament of a valve V which contains in its anode circuit the inductance L_5, retroactively coupled to the inductance L_4. Thus it will be seen that the effective resistance of a section, L_4 C_4, is reduced substantially to zero, thereby materially increasing the efficiency of the circuit. It will be remembered that an almost identical application in the form of the well-known Hinton rejector circuits, in which retroactively coupled valves were associated with ordinary series acceptor or rejector circuits, have been used very successfully by the Post Office.

A DOUBLE ANODE VALVE.

(*Application date*, *23rd July*, 1924. *No.* 240,944.)

The construction of a valve with a double anode particularly designed to be used with a loop filament is described in the above British Patent by The General Electric Company, Limited and A. C. Bartlett. Instead of makingone large flat anode and

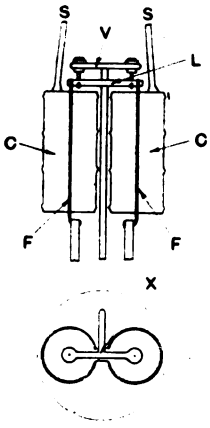

providing a loop filament totally enclosing it, the arrangement shown in the accompanying illustration is adopted. It will be seen that the filament F is arranged in the form of two vertical wires, which are supported by a link L attached to a horizontal upright U. The anode consists of two cylinders C attached to their respective supports S, or while in another modification it is made from one piece of metal, a small gap being left as shown at X in the lower half of the illustraion. Readers will no doubt remember having seen a patent specification some little while ago referring to an almost identical arrangement by the Mullard Radio Valve Company.

A PECULIAR AMPLIFIER PATENT.

(*Application date*, *9th July*, 1924. *No.* 241,257.)

The accompanying diagram illustrates the substance of British Patent No. 241,257, granted to H. Green in respect of amplifier circuits. Referring to the accompanying illustration it will

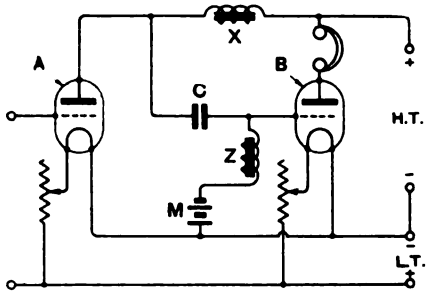

be seen that two valves A and B are intended to be used as low frequency amplifiers, the anode circuit of the valve A being coupled to the grid circuit of the valve B by means of a choke X and coupling condenser C. The grid circuit of the valve B comprises a choke Z and a grid battery M. A claim is made in the specification for using a choke in the anode circuit of one valve followed by a choke in the grid circuit of the next, and a further claim is made for using chokes of similar value. It is stated that 1H may be used with LS5 type valves. Frankly, we do not see very much novelty in the invention. The idea of using a choke as a coupling medium in the anode circuit to the grid of the next and also of using a choke in place of a resistance in the grid circuit is not new. We find them in ordinary choke transmitters provided with choke-coupled sub-controlled valves, and the patent appears to be of an exceedingly limited nature.

Digitized by Google

For the Esperantists.

Distordado. [R800

En tiu-ĉi parto, oni pritraktas la demandon pri distordo, kaŭze de Laŭtparoliloj, kaj donas kelke da konsiletoj pri ĝia evitigo.

PARTO VIA.

MALLONGIGOJ: A.F., Alta Frekvenco; M.F., Malalta Frekvenco; A.T., Alta Tensio; M.T., Malalta Tensio; K.K., Kontinua Kurento; A.K., Alterna Kurento.

FUNKCIO DE LA LAUTPAROLILO.

ANTAŬAJ artikoloj en la nuna serio traktis pri la amplifikatoro, ankaŭ pri la detektoro. Ni nun diros kelkajn vortojn pri la laŭtparolilo aŭ telefonilo.

Oni devas unue tutklare kompreni, ke ni nun alvenas al tre malfacila parto de la temo, se ni deziros trakti ĝin profunde.

Ĝis nun niaj problemoj estis problemoj *elektraj*. Ni penis produkti elektran kurenton de tia forto kaj frekvenco, kiu sekvos precize (sed multe grandigite) la forton kaj frekvencon de la modulo ĉe la antena kurento. Sed nun ni devas komenci pensi pri aeraj ondoj kaj ilia efekto ĉe l'orelo. Ni deziras produkti aron da aerondoj, kiu produktos ĝuste la saman efekton ĉe l'orelo, kiel farus la originala muziko, se ni estus en la brodkastejo mem. Nature, ni unue demandas, kiel ĝuste aŭdas la orelo, kaj kiaj ĉe ĝi la efektoj de variantaj aerondoj. Sed bedaŭrinde la demando ne ankoraŭ estas solvita.

Aparte de tiu-ĉi ĉefa malfacileco, ni devas rigardi la fakton ke, kreante la aerondojn, kiuj trafas la orelon, la laŭtparolilo ne funkcias sole. Eĥoj el la muroj de la ĉambro en kiu ni troviĝas havas grandegan efekton; tiel, laŭtparolilo, kiu donas bonegan rezulton en unu ĉambro, eble sin kondutos tute malsame en alia.

Kaj ni ne povas eviti ĉi tiujn malfacilajojn per uzo de telefonilo, ĉar ekzistas konvinkigaj kaŭzoj por supozigi, ke telefonilo ne povus doni perfektajn rezultojn, eĉ se ili estus perfektaj elektre. Ni aŭdas la originalan prezenton pere de liberaj ondoj en la aero, ĝuste kiel ni aŭdas laŭtparolilon. Telefonilo, kontraŭe, kiam portita laŭkutime, tute ne kreas liberajn ondojn en la aero, sed simple puŝas la aeron sur la diafragmon de la orelo. La diferencon oni ne povas tute klarigi sen longa diskutado pri la naturo de ondoj ĝenerale. Sed la diferenco estas fundamenta.

KELKAJ KONSILETOJ.

Konsiderante ĉiun el tiuj malfacilaĵoj, estas evidente, ke ni ne povas fari, kiel ni faris pri la amplifikatoro—t.e., doni klarigojn pri rimedoj por eviti distordon. Ni povas nur doni kelkajn konsiletojn.

Unue, memoru, ke la ideo uzi certan laŭtparolilon, "ĉar ĝi taŭgas por la aparato," estas fundamente malprava. Se la aparato estas sendistorda, ni bezonas parolilon ankaŭ sendistordan. Se iu alia parolilo ŝajnas taŭgi treege bone por iu alia aparato, tio estas simple ĉar la aparato distordas unumaniere, kaj la parolilo kontraŭmaniere—eble la aparato estas akratona kaj la laŭtparolilo raŭka—kaj en neniu okazo ĉi tia la rezulto estos tiel bona kiel tiu de sendistorda aparato kaj la plej bona laŭtparolilo. Diri, ke unu speciala laŭtparolilo "taŭgas" por aparato, estas konfeso, ke la aparato estas malbona.

KONTINUKURENTAJ EFEKTOJ.

Punkto rimarkinda estas, ke iu ajn laŭtparolilo estas pli-malpli influita de la

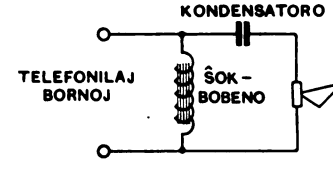

Fig. 1.

konstanta K.K. (la anoda kurento de la lasta valvo) trapasanta tra ĝin. Modernaj laŭtparoliloj estas kutime desegnitaj permesi tion. Sed ĉiam indas observi, ĉu la tono aŭ amplekso estas plibonigita per ĝia forigo. Tio estas facile efektivigebla, kiel per Fig. 1.

Digitized by Google

La ŝokbobeno permesas al la K.K. komponaĵo pasi rekte tra ĝin, dum ĝi malpermesas la parolajn kurentojn. Tiuj ĉi lastaj tamen trapasas la kondensatoron kaj funkciigas la laŭtparolilon.

Ĉi tiun aranĝon oni povas tuj kompari kun la norma aranĝo per simpla 2-voja komutatoro, konektita kiel en Fig. 2. La kondensatoro devus havi kapaciton 1 aŭ 2μF; por la ŝokbobeno, la sekundaria vindaĵo de M.F. transformatoro taŭgos, aŭ unu el la diversaj ŝokbobenoj faritaj por ŝok-kuplitaj M.F. amplifikatoroj. Estos necese provi kelke da diversaj bobenoj por trovi la plej taŭgan.

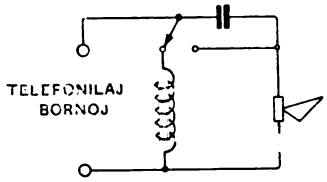

Fig. 2.

Memoru ke, ĝenerale, la alta kosto de grandaj laŭtparoliloj estas mono bonege elspezita. La granda instrumento ordinare estas pli sentema por malalta potenco ol la malgranda, kaj ĝi ankaŭ povas porti grandan enmeton. Plue, malgranda korno havas malbonan efekton per fortranĉo de la malaltaj tonoj. Ofte granda korno ĉe "bebeta" laŭtparolilo produktos miregigan plibonigon.

AKUSTIKO EN LA ĈAMBRO.

Laste, ne forgesu la ĉambron. Bona ekzemplo pri la efekto de la ĉambro estas, kiam la agorda signalo estas sendata de la brodkasta stacio. Tio estas pura tono de unu definitiva frekvenco, kaj estas tial reflektita de la muroj, k.t.p., laŭ tute konstanta maniero. Ĝenerale, oni trovos, ke iometa moviĝo de la kapo—nur kelkaj centimetroj en iun ajn direkton—duobligos la laŭtecon, aŭ preskaŭ tute malaŭdebligos ĝin. Fakte, estas en la ĉambro laŭtaj kaj kvietaj lokoj.

Ĉi tio estas pro interfero inter la rekta sona ondo de la laŭtparolilo kaj aliaj ondoj reflektitaj el de la muroj. Ĝi ne estas rimarkata kiam la komplikitaj sonoj de muziko envenos, sed ĝi ekzistas kaj kaŭzas distordon, ĉar iu difinita loko estos "laŭta" loko por kelkaj tonoj kaj "kvieta" loko por aliaj. La kuraco estas, pendigi kontraŭ la muroj ŝtofon, kiel oni faras en la brodkastejoj. La inĝenieroj ĉe la senda stacio reguligas la kvanton da eĥo, kaj devus ne esti tro da ĝi ĉe la riceva stacio.

Nur unu plua punkto. Ia distordo ordinare fariĝas pli rimarkebla dum la potenco pliiĝas; krom tio, estas tute eble, ke aparato, kiu estas sendistorda je malalta potenco, havas distordon je pligranda elmeto. Tial oni devus konservi silenton, kiam oni deziras impresi alian personon pri la tonpureco. Tamen, *ne* malaltigu la potencon se vi eksperimentas nur por via propra celo. Altigu la laŭtecon ĝis almenaŭ 66% de la aktuala prezento; se tiam ne estas distordo, oni povas resti kontenta, ke ĉio funkcias bone.

Jen finiĝas nia mallonga referato pri la ĉefaj kaŭzoj de nuntempa distordado.

Digitized by Google

EXPERIMENTAL WIRELESS & The WIRELESS ENGINEER

VOL. III. FEBRUARY, 1926. No. 29.

Editorials.

D.C. Smoothing Devices for H.T. Supply.

IT is perhaps not generally realised that so-called direct or continuous current supply systems vary very much in their characteristics. Not only are some much steadier than others, but the irregularities in some systems are of a very different character to those in other systems. It is necessary to remember this, however, when comparing the efficiency of smoothing devices for eliminating the undesirable elements from an alleged D.C. supply before connecting it to the H.T. terminals of a receiving set. We were reminded of this when reading recently that an amateur found choking coils unnecessary, a condenser connected across the tappings from a non-inductive resistance being sufficient to give the desired effect. This might be so on one supply system but not on another. The trouble is not always due to the teeth and commutator segments of the dynamos.

It was noticed recently that the pointers of some of the switchboard instruments in an electrical engineering laboratory vibrated so much that accurate readings were impossible. On investigating the so-called D.C. voltage by means of a Duddell Oscillograph, it was found that there was a pronounced alternating component with a frequency of 150 cycles per second, due to the fact that the supply was from rotary converters in a substation supplied with alternating current of 25 cycles per second. The rotary converters were 6-phase machines, and the tappings from the armature winding to the slip-rings would pass the commutator bushes at the rate of 150 per second.

Other irregularities were present, but the cause of the instrument oscillation was this 150-frequency component.

It would add to the usefulness and interest of any information about tests of smoothing devices for D.C. supply systems, if writers always discovered and stated the type of station from which their supply is drawn. In some cases it might be advisable to insert a definite rejector circuit designed to remove any alternating component known to be present.

Wireless Section of the I.E.E.

AS many of our readers will know, a proposal has recently been made to inaugurate an Institute of Wireless Engineers. The object of the proposers was apparently to cater mainly for those professionally engaged in the technical side of the subject, but who do not possess the qualifications necessary for membership of the Institution of Electrical Engineers. There are already two organisations dealing with the technical side of radio work, viz., the Wireless Section of the Institution, and the Radio Society of Great Britain, the

Digitized by Google

former a professional and the latter largely, but not exclusively, an amateur body.

Although doubt was felt by many as to the wisdom of starting a third organisation, the proposers drew attention to certain alleged disabilities under which radio engineers were placed as compared with other electrical engineers in applying for membership of the Institution; they also pointed out that the Wireless Section meets only in London. In the minds of most people the strongest argument in favour of the proposal is the success of the American Institute of Radio Engineers, an organisation entirely separate from the American Institute of Electrical Engineers.

The matter has been considered very carefully by the Committee of the Wireless Section of the Institution, which has made certain recommendations and these having now been approved by the Council are issued for publication (see page 115).

Calibration Department.

As announced in last month's issue, our Calibration Department is now re-opened as from 1st February, 1926. May we draw the attention of readers to the note which appeared on page 51 of the January issue regarding the care which should be exercised in the design of apparatus intended for calibration. General details regarding the calibration service, and coupon for the current month, will be found in the advertisement section of this issue.

Our Predecessor.

Readers of E.W. & W.E. will be interested to learn of the appointment of Mr. P. K. Turner to take charge of the Research Department of Messrs. Burndept Wireless, Ltd., which is a sequel to his retirement from the editorship of E.W. & W.E., in search of greater scope for practical development work. We hope that Mr. Turner's new activities will not prevent him from acting as a frequent contributor to this journal as we have reason to know that his contributions in the past have been keenly appreciated.

Our readers will, we feel sure, join with us in wishing Mr. Turner all success in his new sphere.

An Apology.

Our attention has been drawn to the fact that Figs. 15 to 18 of Captain Miles' Lecture before the Radio Society of Great Briain, which were reproduced on page 29 of our last issue, were taken from a book, *Les Ondes Radio Electriques*, by M. N. Adam, the Technical Director of our esteemed contemporary *Radio-Electricité*. We regret that these figures were reproduced by the author of the paper without due acknowledgement.

Digitized by Google

Valve Nomenclature—A New Term Suggested.

By Professor G. W. O. Howe, D.Sc. **[R030**

WHEN a steady continuous current flows through a coil of wire, the relation between the P.D. across its terminals and the current is a fixed ratio which we call the resistance of the coil. When an alternating current flows through the coil, the terminal P.D. may be regarded as made up of two components, one in phase with the current and the other 90 degrees out of phase with it. The former component should be equal to $I \times R$, and the power supplied equal to I^2R, using root-mean-square values of current and voltage; on account of non-uniform current distribution in the wire, and other causes, the value of R obtained from such considerations is generally larger than that determined with continuous current, and is referred to as the effective resistance or A.C. resistance. This must not be confused with the impedance; the effective resistance is that quantity which must be multiplied by I^2 to obtain the power supplied; the impedance is that quantity which must be multiplied by the current to obtain the terminal voltage. In a choking coil the impedance is usually many times as great as the effective resistance. The impedance is equal to the hypotenuse of a right angled triangle, one side of which is equal to the effective resistance, and the other side to the reactance. Now the reactance of any piece of apparatus depends on the frequency of the alternating current, the reactance of an inductive coil is proportional to the frequency, that of a condenser is inversely proportional to the frequency. Hence the impedance, which involves the reactance, depends on the frequency. By making a coil non-inductive or by making the frequency very low, it is possible to make the reactance so small that the impedance is practically independent of the frequency, but these are extreme limiting conditions and do not alter the fact that impedance is essentially dependent upon frequency.

In Fig. 1 the curve $ABCD$ represents a part of a characteristic curve of a piece of apparatus; each point on the curve gives the corresponding values of P.D. and current. Unless something is definitely stated to the contrary, it is always assumed that such curves refer to steady static conditions, that is to say, I_1 is the current which flows through the apparatus when the P.D. is maintained steadily at V_1. In some cases, such as with an electric arc, it may be

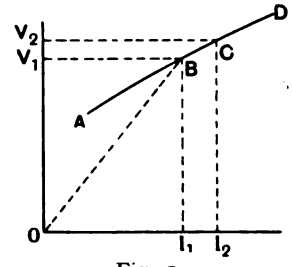

Fig. 1.

necessary to maintain the conditions steady for a considerable time before taking the corresponding readings. When conditions are changing rapidly, it does not follow that the P.D. will be V_1 whenever the current has the value I_1.

Now for many purposes we are not so much interested in the resistance V_1/I_1 at B or V_2/I_2 at C, as in the ratio of the increase of voltage to the increase of current, *i.e.*, in the slope of the characteristic curve at a given point or over a given range. Mathematically this is written dV/dI; it is the ratio of a small difference of voltage to the corresponding small difference of current. Now the question which arises, and which is the reason for writing this note, is: What shall we call this ratio? We cannot call it the resistance, since this term already has another definite meaning, and we cannot call it the impedance, since this term not

Digitized by Google

only has another definite meaning but is associated with dependence upon frequency of alternating current. The ratio dV/dI has nothing to do with frequency, nor has it any essential connection with alternating current; it is merely the slope of a static curve which may entirely cease to have any reference to the conditions existing when rapid changes or oscillations are taking place. For these reasons it would appear that the most correct term to apply to the ratio is "differential resistance"; it is the quotient obtained by dividing a small difference between two voltages by the corresponding small difference between two currents, and the name suggested is almost self-explanatory.

If an oscillatory current is superposed upon a steady current, and it can be assumed that the static characteristic is applicable at the frequency involved—this assumes freedom from hysteresis or inertia of any kind, mechanical, electrical or thermal—then the differential resistance can be used to calculate the additional power due to the oscillatory current.

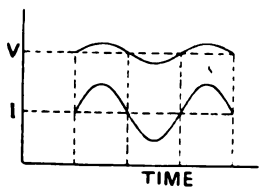

Fig. 2.

Let the steady voltage and current be V and I and let the amplitudes of the superposed alternating voltage and current be $\hat{v}$ and $\hat{i}$ so that at any moment

$$v = V + \hat{v} \sin \omega t.$$
$$\text{and} \quad i = I + \hat{i} \sin \omega t.$$

We assume that $\hat{v}$ and $\hat{i}$ are so small that the characteristic can be assumed to be linear over the range of the oscillation; the ratio $\hat{v}/\hat{i} = r_d$ is what we have called the differential resistance. The power supplied is the average value of the product $v \times i$ taken over a complete cycle.

Now, $v \times i = VI + (V\hat{i} + I\hat{v}) \sin \omega t + \hat{v}\hat{i} \sin^2 \omega t$; the first term is constant, the average value of $\sin \omega t$ is zero and the average value of $\sin^2 \omega t$ is 0.5. Hence the power is $VI + \hat{i}\hat{v}/2$ or $VI + \hat{i}^2/2\ r_d$ or, since $\hat{i}/\sqrt{2}$ is the root-mean-square value of the alternating current, $I^2 \times R + i^2 \times r_d$, where i is the R.M.S. value.

Hence the differential resistance is the effective resistance to superposed oscillations at the given point on the characteristic, on the assumption that the static characteristic is applicable at the alternating frequency. This assumption is usually permissible in thermionic valve problems, but is rarely ever approximately correct in the arc. Confining ourselves to the valve and assuming the applicability of the static characteristic to high-frequency oscillations, it must be remembered that the current given by the characteristic is the purely thermionic current. The total alternating current entering an electrode at a high frequency will consist of two components, one that which we have just considered in phase with and proportional to the alternating voltage, and inversely proportional to the differential resistance, the other proportional to the capacity between the electrodes and 90 degrees ahead of the voltage. The first is independent of the frequency, the second is proportional to the frequency. The differential resistance and the capacity reactance are in parallel and may be combined to give the impedance, but this will depend on the frequency. There is no justification whatever for referring to the differential resistance as the impedance of the valve or other apparatus; such a misuse of the term can only lead to confusion.

In the same way, a conductance which is not the value of I/V but of dI/dV, should be referred to as a differential conductance. It is the reciprocal of a differential resistance. There may be many cases in which the word differential may be safely omitted without any danger of misunderstanding; the mutual conductance of a valve, for example, would always be taken as the ratio dI_a/dV_g, unless something very definite were stated to the contrary.

Our main object in writing this article, however, is to protest against the application of the term "valve impedance" to a ratio obtained under static conditions, having no connection with frequency and constituting merely one component of the real impedance.

Digitized by Google

An Experimenter's Wireless Laboratory.

By Leonard A. Sayce, M.Sc., Ph.D., A.I.C., and James Taylor, M.Sc., Ph.D., A.Inst.P. **[R201**

Introduction.

SOONER or later in the experience of most experimenters there comes a time when real progress is rendered very difficult by the lack of facilities for making electrical measurements. Much may be done, of course, by the use of "rule of thumb" methods provided that no radical departure is made from standard practice, but it is in breaking new ground and attempting new departures that one is apt to sigh for the well-equipped laboratory with its array of costly instruments. There is no reason at all, however, why every amateur should not possess his own laboratory and be able to make all the more usual electrical measurements with reasonable accuracy. In the present series of articles, therefore, we shall show how this can be done with the least possible expenditure and in order that the methods of measurement may be fully understood by the less advanced worker, a sufficient explanation of the fundamental principles underlying them will be given.

To bring the above object within the reach of everyone the purchase of ready-made apparatus must be reduced to an absolute minimum. Now, most electrical instruments depend ultimately upon the measurement of current and there is not much that cannot be done if we can do this with accuracy. And so we shall see that a really efficient electrical laboratory can be equipped by the purchase of only one expensive instrument—a calibrated microammeter. Other accessory apparatus will, of course, be required, but these can, in most cases, be home-made, and where calibration is required, the Calibration Department of this journal is available at a very small cost. It may give the reader confidence to know that in preparing the instruments to be described here for photographing and testing, the authors have carefully followed their own instructions and have resorted to more refined standard instruments only as a final test of the home-made arrangements.

District Current Measurements.

Theory.

If a potential difference V is applied to the ends, A B, of a resistance (see Fig. 1), it is found that the current through the resistance can be expressed by the relation

$$I = \frac{V}{R} \quad .. \quad .. \quad (1)$$

where I is the current, in amperes,

V is the voltage across AB in volts and

R is the resistance in ohms.

This is the *most fundamental* equation in direct current work and is known as Ohm's Law.

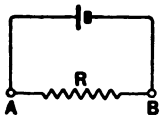

Fig. 1.

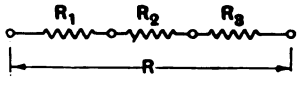

Fig. 2.

We see that the equation contains three unknown quantities; it is therefore sufficient to know any two of them in order to determine the third. That is to say, current may be measured in terms of voltage and resistance, voltage in terms of current and resistance and resistance in terms of current and voltage. We may express this as follows:—

$$I = \frac{V}{R} \quad .. \quad .. \quad (1a)$$

Current in any circuit or part of any circuit =

$$\frac{\text{Total voltage across the resistance}}{\text{Resistance}},$$

$$V = IR \quad .. \quad .. \quad (1b)$$

Voltage drop along the resistance =

Current × Resistance,

$$R = \frac{V}{I} \quad .. \quad .. \quad (1c)$$

Resistance of circuit or part of circuit =

$$\frac{\text{Total voltage across the part of the circuit considered}}{\text{Current passing through the circuit}}.$$

Digitized by Google

Resistances.

Resistances in Series.

If two, or more, resistances are connected in series (Fig. 2), the total resistance, R, is equal to the sum of the separate resistances. This may be expressed as an equation :—

$$R = R_1 + R_2 + R_3 + \quad .. \quad (2)$$

Resistances in Parallel.

Let us consider two resistances, R_1 and R_2 ohms (Fig. 3), in parallel and connected to a battery so that a current, I, flows in the main circuit. This current divides at A into two portions: I_1 in the resistance R_1 and I_2 in the resistance R_2, so that $I = I_1 + I_2$.

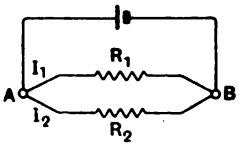

Fig. 3.

Let the potential drop from A to B be V volts, then the drop both in R_1 and in R_2 must be V volts. If R is the combined resistance of R_1 and R_2 in parallel we have :—

$$I = \frac{V}{R}$$

$$I_1 = \frac{V}{R_1}$$

$$I_2 = \frac{V}{R_2}$$

but

$$I = I_1 + I_2$$

$$\therefore \quad \frac{V}{R} = \frac{V}{R_1} + \frac{V}{R_2},$$

and dividing through by V, we have

$$\frac{1}{R} = \frac{1}{R_1} + \frac{1}{R_2} \quad .. \quad .. \quad (3)$$

or, putting the equation into words, the reciprocal of the two resistances in parallel is equal to the sum of the reciprocals of the two resistances. If, for example, both R_1 and R_2 were 1 ohm, then $1/R = 2$ and $R = \frac{1}{2}$. Thus we see that the combined resistance must always be less than either of the resistances.

Finally, by a slight extension of the above equations, we find that :—

$$I_1 = \frac{R_2}{R_1 + R_2} \times I \quad .. \quad (4)$$

$$I_2 = \frac{R_1}{R_1 + R_2} \times I \quad .. \quad (5)$$

$$\therefore \quad \frac{I_1}{I_2} = \frac{R_2}{R_1} \quad .. \quad .. \quad (6)$$

or, the currents through the resistances are in the inverse proportion to their resistances.

Apparatus.

For the present purpose of measuring the voltage, current and resistance of D.C. circuits, the following apparatus is required :—

1. A microammeter having a range of 0-120μA and of known resistance. As this is to be the fundamental instrument in all the above measurements and in many others to be described later, it is essential that it should be of reliable performance, readily portable, "dead-beat," and of reasonably short time-period. So far as we know, the only instrument that fulfils these conditions adequately is the "Unipivot" galvanometer of the Cambridge Scientific Instrument Company (45, Grosvenor Gardens, S.W.1). It is made in a variety of patterns, but the "Type I," shown in Fig. 4, calibrated 0-120μA and approximately of 50 ohms resistance, is the most suitable and costs £6 10s. This is the only really expensive item in our laboratory equipment, and although it is almost indispensable, a Weston Relay, converted as previously described in these columns (Vol. I., page 721, Sept., 1924) may be used with fair success. If this course is adopted the instrument should be sent for calibration to the Calibration Department of this journal.

2. Resistances of 1 000 ohms, 100 ohms, 10 ohms and 1 ohm respectively. These can be purchased, accurate to one part in a thousand, for about seven shillings each, and a very convenient type, shown in Fig. 4, is made by Messrs. F. E. Becker & Co. (17, Hatton Wall, E.C.1).

It is necessary, further, to have a resistance of 10 000 ohms and this may conveniently be made variable in ten equal steps in the

Digitized by Google

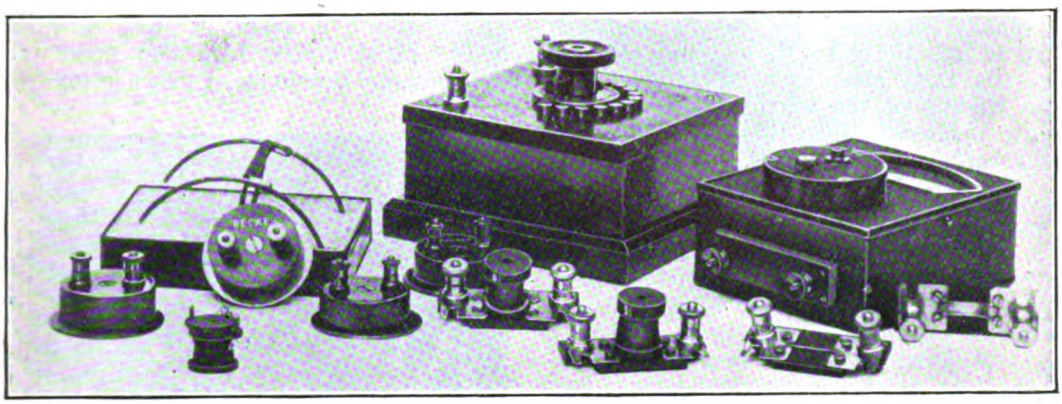

Fig. 4. *"Unipivot" galvanometer, resistance box, shunts and change-over switch.*

manner shown in Fig. 4. A laminated switch-arm is mounted at the centre of an ebonite panel measuring 5 ins. by 5 ins. by $\frac{3}{8}$ in. Beneath the panel and grouped in a circle $3\frac{1}{2}$ ins. in diameter are ten ebonite bobbins of the dimensions shown in Fig. 5, each bearing, at its wider end, two 6 B.A. by $\frac{1}{8}$ in. screws holding little soldering tags as terminals. [Of course, it is not essential to use ebonite for these bobbins or to make them one's self. Some very suitable bobbins, made of varnished hard wood and fitted with connecting wires, instead of soldering-tags, can be obtained from Mr. Ernest Turner, Chiltern Works, High Wycombe, Bucks.] Each bobbin is wound non-inductively with No. 40 S.W.G. double silk covered "Eureka" (or "Constantan") wire to a resistance of 1 000 ohms. In order to do this, fasten one end of the wire, reel out 40 feet of it, and double it back upon itself for a further 40 feet,

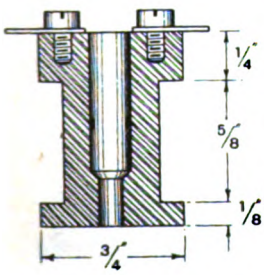

Fig. 5.

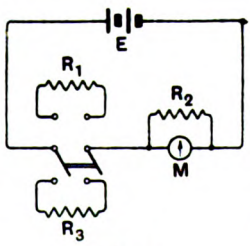

Fig. 6.

solder the ends of the wire to the two soldering tags respectively, and wind the doubled wire upon the bobbin, finishing at the looped end.

Having wound the ten bobbins in this way, soak them all in molten paraffin wax and proceed to adjust each of them accurately to 1 000 ohms. For this purpose, the circuit shown in Fig. 6 is used. E is a 4-volt accumulator, M the microammeter, R_1 and R_2 the standard resistances of 1 000 ohms and 1 ohm respectively (do *not* use them in the reverse order), R_3 the bobbin being tested and a double-throw double-pole

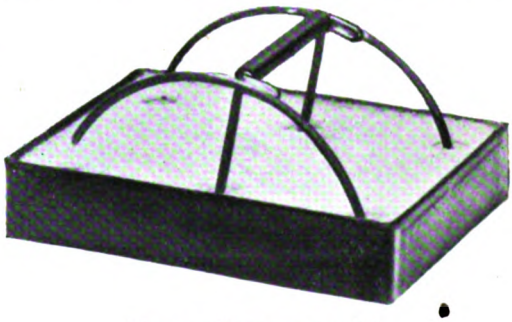

Fig. 7. *Change-over switch.*

change-over switch puts in circuit R_1 or R_3. This switch will often be required and Fig. 7 explains its construction. The base is a quarter-plate negative box filled with paraffin wax in which there are six holes filled with mercury. The two sides of the "rocker" are made of No. 12 S.W.G. copper wire joined together, but insulated one from the other by a piece of ebonite, or glass, tube fastened on with sealing-wax.

Each resistance coil is put into the position R_3—the soldering-tags being conveniently gripped by "tie-clip" terminals—and is

Digitized by Google

gradually shortened by cutting half-inch lengths from the end of the loop and soldering up the ends after each alteration, until the reading of the microammeter remains quite unaltered, when the switch is rocked backwards and forwards. Finally, the

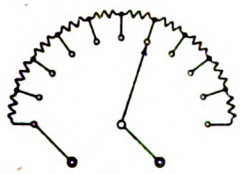

Fig. 8.

bobbins are fixed to the ebonite panel by 6 B.A. bolts, screwed into "blind" holes in the ebonite, and are wired up according to the diagram of Fig. 8. A view of the back of the completed instrument is shown in Fig. 9.

3. A set of four accurately adjusted resistances, usually called "shunts," which when connected across the terminals of the microammeter will reduce its sensitivity by a definite amount and cause its scale to read :—

1.—0 to 1.2 milliamperes.
2.—0 to 12 milliamperes.
3.—0 to 120 milliamperes.
4.—0 to 1.2 amperes.

Each shunt is mounted upon a little ebonite panel arranged to clip upon the microammeter terminals, as shown in Fig. 10,

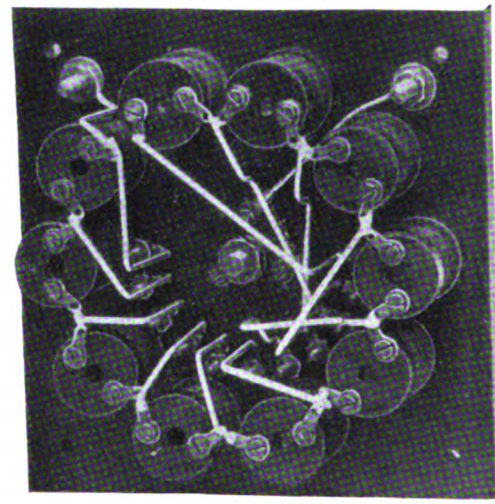

Fig. 9. *Wiring and arrangement of the resistance box.*

and is provided with two terminals for connecting with the required circuit. Shunts Nos. 1 and 2 are wound upon ebonite bobbins,

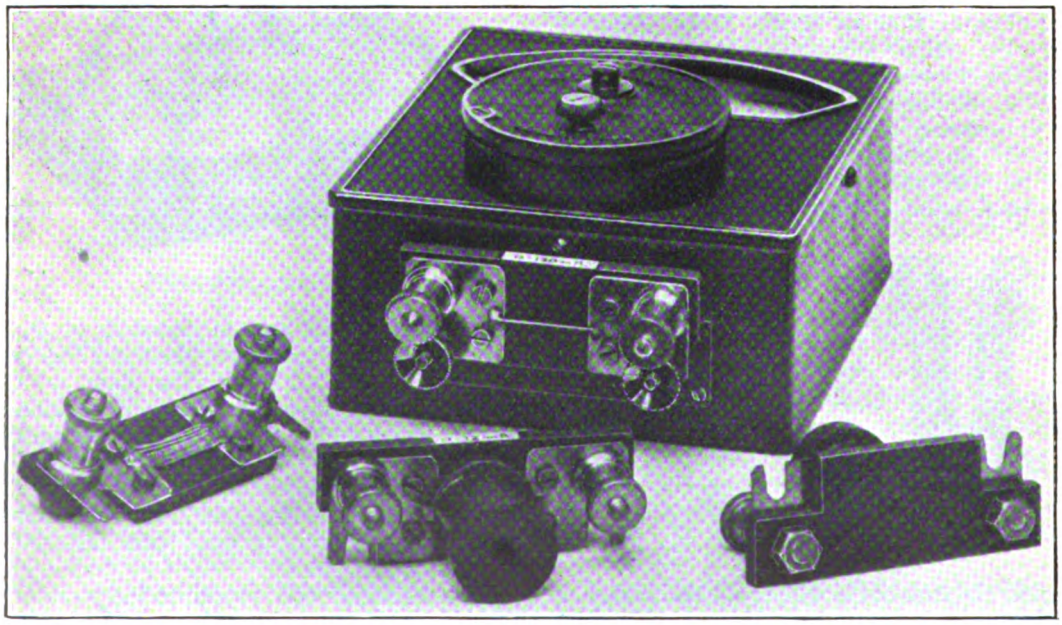

Fig. 10. *Galvanometer and shunts.*

Digitized by Google

like those described above, whilst Nos. 3 and 4 are short lengths of rigid wire and require no special support.

Of course, the values of the shunts could be calculated by using equation 6 (above), but they certainly would not be equal to any of the resistances that we have in hand at present. By the following method, however, they can be made with very considerable accuracy.

A resistance coil, approximately equal to the resistance of the microammeter, is first required. This is made of No. 40 S.W.G. "Eureka" wire, wound as before, upon an ebonite bobbin. About four feet of the wire is required. The microammeter is connected in series with a "spent" dry cell and its reading adjusted near to its maximum by means of the 10 000 ohm resistance in series with it. The resistance coil is then placed in parallel with the meter and is altered until the reading of the latter is exactly one-half of its former value. The resistance of the coil is then equal to that of the microammeter.

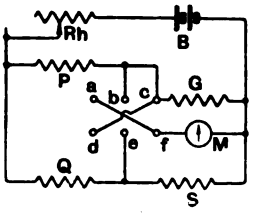

Fig. 11.

Each of the shunts is adjusted by employing the circuit shown in Fig. 11. P and Q are standard resistances; G is the resistance equal in value to that of the microammeter, M; S is the shunt that is being adjusted whilst R_h is a rheostat to limit the current supplied by the battery, B; *abcdef* is the mercury-cup switch already described.

No. 1. Shunt (0 to 1.2mA).

P=1 000 ohms.
Q=100 ohms.
B=2-volt accumulator.
R_h=the variable 10 000 ohm resistance set at 2 000 ohms.
S=six inches of No. 40 D.S.C. "Eureka" wire.

It will be found that the microammeter shows a reading lower when the switch is in the left-hand position (*a* to *b*, *d* to *e*) than when it is in the right-hand position (*b* to *c*, *e* to *f*). Gradually reduce the length of S, rocking the switch backwards and forwards at each alteration, until the reading is the same in both positions. The final adjustments should be made with the shunt wire soldered to its final fittings. (*N.B.*—The solder must be allowed to become quite cold before testing, otherwise the Seebeck effect introduces serious errors.) The resistance of the shunt is now precisely one-ninth of that of the microammeter, so that when it is slipped in place across the terminals of the latter and a current is made to pass through the shunted instrument, one-tenth of the total current traverses the meter whilst the shunt carries the remainder. Thus the range of the instrument is now 0-1.2mA.

No. 2 Shunt (range 0-12mA).

P=1 000 ohms.
Q=10 ohms.
B=6-volt accumulator.
R_h=the variable 10 000 ohm resistance set at 1 000 ohms.
S=a cable made of ten five-inch strands of No. 40 S.W.G. Eureka wire. This plan is used to save getting an odd length of rather coarser wire and is quite satisfactory.

The procedure is exactly the same as in making No. 1 Shunt.

No. 3 Shunt (range 0-120mA).

P=1 000 ohms.
Q=1 ohm.
B=6-volt accumulator.
R_h=100 ohms.
S=three-quarters of an inch of No. 22 S.W.G. bare Eureka wire, as used for filament rheostats.

The resistance of the shunt is varied, not by altering its length but by scraping it with the blade of a penknife.

No. 4 Shunt (range 0-1.2A).

P=10 000 ohms.
Q=1 ohm.
B=6-volt accumulator.
R_h=10 ohms.
S=7½ inches of No. 22 S.W.G. bare Eureka wire "zig-zagged" ten times—so as to be, in effect, a strip ¾-inch long—and soldered into position.

In this case it is essential that the leads of the shunt and the microammeter should be as short and thick as possible. The resistance of this shunt should be adjusted, as before, by scraping it.

Digitized by Google

When the shunt has been adjusted in the manner already described, it is still far from correct, for, however short and thick the leads may be, their resistance and the contact-resistance of their connections are comparable with that of the shunt itself; *i.e.*, in the order of $\frac{1}{200}$ ohm. Nevertheless, it is evident that the *combined resistance* of the shunt, contacts and connections is of the required value. We require therefore a means of making the shunt equal to this combined resistance. To effect this, remove all the apparatus except that shown in Fig. 12*a* and bridge the mercury cups *e* and *f* by a very stout copper wire. The micro-ammeter, shunt and connections have not been disturbed so that, as they stand, the

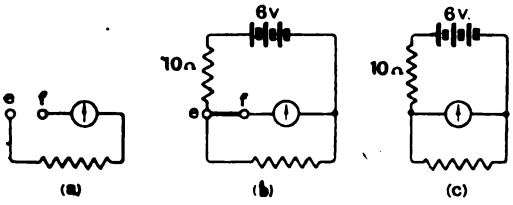

Fig. 12.

instrument will still read the required range: 0-1.2A. Connect the 10-ohm resistance and a six-volt accumulator to *e*, as shown in Fig. 12*b*, and notice the reading of the meter, d_1. Then connect the shunt to the terminals of the meter by means of its hooks and again connect it in series with the 10-ohm resistance and the 6-volt accumulator, Fig. 12*c*. The reading of the meter, d_2, is now lower than d_1 because the resistance of the leads and their contacts is now absent. Finally, scrape, or file, the shunt wires until $d_2 = d_1$ and the shunt is completed.

Measurement of Current.

It will be seen that we are now provided virtually with five ammeters and are in a position to measure direct currents as widely different as those passing through a valve filament and through the telephones of a crystal set respectively.

Readers may have every confidence in the accuracy of the shunted instrument if the above instructions are followed carefully. As evidence of this, the shunts shown in Fig. 10 were made exactly as described and, in each case, the error of the shunted instrument was well under 1 per cent., the mean error of all the shunts being 0.43 per cent.

Measurement of Voltage.

When an ammeter is measuring the current through a circuit it is desirable that the resistance of the instrument should be as low as possible, for otherwise there is an unnecessary waste of power. The desirable features of a voltmeter are, however, exactly the reverse. A voltmeter is used to indicate the difference in electrical pressure, or "potential," between two points in a circuit and if the voltmeter is of low resistance it may cause a sufficient alteration in the circuit to lower appreciably the actual voltage which it is required to measure. The ideal voltmeter is one which has a very high resistance and which consequently requires a very small current to operate it.

It follows immediately from Ohm's Law that the current through a resistance is proportional to the voltage across the ends of the resistance (equation 1*a*). Thus we have merely to connect our microammeter, either shunted or alone, in series with a high resistance, *R*, Fig. 13, in order to use it as an efficient voltmeter whose range can be adapted to suit any requirements. For instance: If a resistance of 10 000 ohms is placed in series with the meter and the latter is shunted for 0-1.2mA then the combination becomes a voltmeter reading 0—12 volts. Further examples are given in the following table:—

	Series resistance (ohms).	Range of meter. (mA)	Range of combination (volts).
1	1 000	0-120	0-0.12
2	10 000	0-120	0-1.2
3	2 000	0-1.2	0-2.4
4	5 000	0-1.2	0-6
5	10 000	0-1.2	0-12
6	10 000	0-12	0-120

In all cases the voltage as stated should be multiplied by the factor $\frac{R+G}{R}$ where

R = Series resistance and

G = Combined resistance of meter and shunt, if any.

Digitized by Google

In the first case given in the table this correction is quite considerable, in the second case it is much less so, whilst in all the others it is negligible.

The variable 10 000 ohm resistance is very suitable for use as the series resistance and by its means the range of the instrument can readily be altered to meet various requirements. If, however, an entirely self-contained unit is preferred, a resistance coil and a shunt, if required, can be mounted, like the

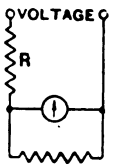

Fig. 13.

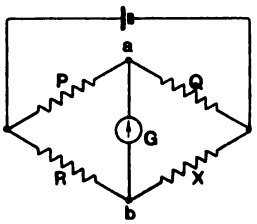

Fig. 14.

ampere shunts of Fig. 10, upon a little ebonite panel arranged to clip upon the micro-ammeter terminals. The resistance coil can be made by reference to the 10 000 ohm resistance, using the circuit shown in Fig. 6 for the purpose, and, since compactness is now required, it may be wound with No. 47 S.W.G. D.S.C. Eureka wire, the resistance of which is approximately 235 ohms per yard.

Measurement of Resistance.

Now that we are in a position to measure both voltage and current we can always calculate the third term of Ohm's Law and so obtain the resistance of any circuit (see equation 1*c*). It is usually inconvenient to measure a given resistance by the direct application of Ohm's Law unless it is so high that the resistance of everything else in the circuit can be ignored. Most methods of measurement depend rather upon the *comparison* of resistances than their direct measurement; in fact, it may be taken as a rule that an electrical quantity can be measured more accurately by comparison with standards than in any other way. In the present case we shall describe only one method for the comparison of resistances, one that is particularly useful for resistances of low value. A brief reference must be made, however, to what, in a laboratory with the necessary equipment, is certainly the most accurate and general method of all, the Wheatstone bridge.

If the circuit of Fig. 14 be assembled, comprising four resistances, P, Q, R and X, together with a cell, and a sensitive galvanometer, G, it will almost always be found that the galvanometer indicates the presence of a current through it. It is possible, however, to vary one, or more, of the resistances until the galvanometer gives a "null" reading (*i.e.*, shows no current). When this is so, then "*a*" and "*b*" must be at the same potential and it can be shown that under these circumstances

$$\frac{P}{Q} = \frac{R}{X} \text{ or alternatively } \frac{P}{R} = \frac{Q}{X}$$

Thus, if we know the values of any three of the resistances, we can immediately calculate the value of the fourth.

Further—and herein lies the special virtue of the method—if, for instance, $P : Q :: 1\,000 : 1$ then $R : X :: 1\,000 : 1$. That is to say, if X were the unknown resistance, it would be measured in terms of a resistance R a thousand times as great and the accuracy of the method would be proportionately increased. In the "Post Office Box"—the most convenient form of the bridge—P and Q are always made in some decimal proportion so that when the bridge is balanced—when no current is flowing through the galvanometer, G—then the value of X is obtained simply by multiplying or dividing that of R by some multiple of ten.

The above principle can be applied in a great number of ways, not only to the measurement of resistance but to the measurement of capacity and inductance. Its practical application to the measurement of resistance will not be described here, however, because we cannot obtain the full advantages of the Wheatstone bridge unless the resistance coils are more accurate than those we are in a position to make. Further, to profit by the method, we should require a galvanometer considerably more sensitive than our micro-ammeter and, although such an instrument could be made without much difficulty, it would take longer to use and be much less convenient than the following methods.

1. *Low Resistance.*

This method is suitable for the measurement of resistances up to about 50 ohms, and depends upon the fact stated in equation 1*b*, that the voltage applied between the ends of a conductor is equal to the product of its

Digitized by Google

resistance and the current. Thus if two resistance coils are joined in series and the same current is passed through both of them, the voltage across each coil is proportional to its resistance.

The circuit employed is shown in Fig. 15, where B is a two-volt accumulator cell, X the unknown resistance and R one of the standard resistances, either 10 ohms or 1 ohm, whichever is nearer in value to X. R_h is a rheostat but it is required only if X is under 5 ohms.

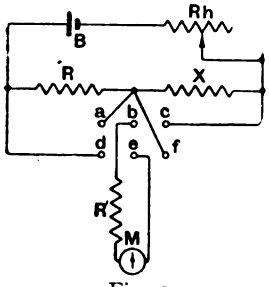

Fig. 15.

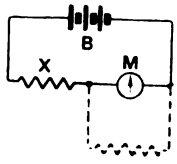

Fig. 16.

The microammeter, M, is arranged as a voltmeter, *i.e.*, it is connected in series with the 10 000 resistance, R^1. *abcdef* is the mercury-cup switch shown in Fig. 7.

The method of measurement is very simple :—

Let d_R=reading of the meter when the switch is in the left-hand position, a to b and d to e connected ; and d_X=reading of the meter when the switch is in the right-hand position, b to c and e to f connected.

Then $\frac{X}{R} = \frac{d_X}{d_R}$, *i.e.*, $X = \frac{R \times d_X}{d_R}$

2. *High Resistance.*

The following method is suitable for measuring resistances from 50 ohms upwards. Although there are certainly more accurate methods, yet it requires no additional apparatus and its precision is comparable with that of the other measurements described.

Connect a six-volt accumulator, B, Fig. 16, in series with the unknown resistance, X, and the microammeter, M, if necessary, choosing a shunt for the latter such that the current gives at least a half-scale deflection. Let this current be I amps. Then, measure the exact voltage of the accumulator by the method already given and the required resistance $X = V/I$

In measuring resistances higher than 100 000 ohms an ordinary dry-cell high-tension battery should be substituted for the accumulator, B. For example, an H.T. battery was connected in series with the microammeter and a grid-leak and a current of 70μA was indicated. The instrument was then used as a voltmeter and the battery was found to have an E.M.F. of 97 volts. The resistance of the grid-leak was thus

$$\frac{97}{70 \times 10^6} \text{ ohms} = 1.38_5 \times 10^6 \text{ ohms} = 1.38_5 \text{ megohms.}$$

In the above method no account is taken of the resistance either of the accumulator or the meter but, in dealing with resistances of over 50 ohms, the error is very small and it becomes progressively smaller as the resistance becomes higher.

APPENDIX.

As the method here described for the making of shunts is original, an explanation of its theory may not be out of place :—

If I_1=current flowing when switch is in left-hand position, a to b, d to e connected (Fig. 11).

I_2=current flowing when switch is in right-hand position, b to c, e to f connected.

S_1=combined resistance of shunt S, and microammeter M,

then

$$\frac{I_1}{I_2} = \frac{Q+S_1}{P+G} \text{ (see equation 6, above)} \quad .. \quad (7)$$

$$S_1 = \frac{G \times S}{G+S} \text{ (from equation 3)}$$

When the readings are the same for both positions of the switch :—

$$I_2 = \frac{G+S}{S} \cdot I_1$$

Equation (7) becomes

$$\frac{I_1}{I_1 \cdot \frac{G+S}{S}} = \frac{\frac{G+S}{Q+G+S}}{P+G} = \frac{QS+QG+GS}{(P+G)(G+S)}$$

$$\therefore \quad \frac{S}{G+S} = \frac{QS+QG+GS}{(G+S)(P+G)}$$

$$\therefore \quad SP+GS = QS = QG+GS$$

$$\therefore \quad S(P-Q) = QG$$

$$\therefore \quad S = \frac{Q}{P-Q} \cdot G$$

i.e.,

If (1) $P = 1000$ and $Q = 100$ then $S = \frac{1}{9} G$

$P = 1000 \quad Q = 10 \quad S = \frac{1}{99} G$

$P = 1000 \quad Q = 1 \quad S = \frac{1}{999} G$

$P = 10\,000 \quad Q = 1 \quad S = \frac{1}{9999} G$

Digitized by Google

Some Remarkable Effects of Large High-Frequency Electric Currents.

By G. H. Farnes, B.Sc. **[R100·009·1**

MOST amateur constructors are occasionally brought in touch with some apparently unaccountable phenomena in the working of their wireless apparatus. Some of these troubles may be due to faulty insulation or electrical connections, but others, especially if the lay-out of the components of the set has not been carefully planned, will be due to capacity and inductance between the actual wiring in the set. In receiving sets the trouble is often difficult to locate as the currents in the high frequency circuits are only a few thousandths of an ampere. When, however, one is dealing with large high frequency radio currents of several hundred amperes, such as those at our high-powered commercial transmitting stations, the effect of "stray" capacities and inductances is sometimes brought into alarming prominence. If there are any closed metallic circuits near the coils carrying the high frequency currents they will have circulating currents induced in them, especially if the capacity and inductance of any loop happens to have a natural period of oscillation which is the same as, or a multiple of, the main aerial oscillation. Such closed circuits are formed by iron frameworks of the building, iron conduits for electric light conductors, iron framework of switchgear and by the numerous leads connecting the apparatus. If these circuits have any appreciable resistance great losses occur which result in heating and often in the burning out of conductors. A few strange effects which have come within the writer's personal experience show how careful one must be when dealing with large high frequency currents, not only by having perfect direct insulation but also as regards neighbouring conductors and partial conductors which are not connected to the current-carrying conductors in any way.

In the Inductance Room of a High-powered Transmitting Station.

At a large transmitting station, during alterations to the room housing the aerial inductance, it was necessary to erect a temporary wooden wall. One day this became damp due to rain and hence was made a partial conductor. The eddy currents induced in it caused it to heat up and eventually burst into flames.

In the same inductance room by nature of an experiment two lengths of damp wood were laid across each other forming two sides of a triangle. For some time nothing happened but when a third piece was laid acrosss to complete the triangle, and hence the circuit, the wood quickly heated up and caught fire. On another occasion it was noticed that the iron lock on the door was unbearably hot due to hysteresis and eddy current losses. If a watch is worn near these coils it is quickly disorganised. By walking round the room and holding the point of a pencil near various metallic objects, such as an instrument case or a telephone, a stream of sparks can often be drawn.

There will occasionally be a potential between two people in this room due to their different electrical capacity and on one occasion when the writer shook hands with a friend in this strange inductance room there was a stream of sparks from one hand to the other.

These strange effects are not confined to the inductance room but are also to be noticed under the aerial system which, by the way, is half a mile long and about six hundred feet wide. The stays of the aerial masts were insulated by large porcelain strain insulators and trouble was experienced due to these "flashing over." When they were taken down and examined it was found that they had been practically molten inside. There is a barbed wire fence round the aerial site and the portion of this which is under the aerial lead-up becomes so hot by the induced current that it cannot be handled. Sparks can be drawn from this also by holding a piece of metal near to it.

Digitized by Google

On one occasion an iron stay wire was attached to a wooden pole carrying the earth wires and the mutual inductance between the earth wires and the stay wire was sufficient to cause the induced high frequency current to heat the stay wire to a white heat.

On another occasion the effect of a slight stray mutual inductance and capacity had a more serious effect. A steel wire halyard was left attached to the top of a 460-foot wooden lattice mast, the lower end of the halyard being connected to a winch and thus practically earthed. When the station was working a potential was induced between the halyard and the wooden top of the mast which can be regarded as insulated by virtue of the wooden structure. This caused sparking and the first thing noticed, after several days' running, was that the top of the mast was burning. It was in fact a fire 460 feet in the air. Imagine the difficulty in obtaining firemen to tackle this job. The cost of each mast was approximately £5,000, not to mention the large financial loss due to closing down the station. Finally two firemen climbed the mast by means of the diagonal bracing members. It took them nearly an hour, but when they did reach the top they soon cut away the burning members by means of axes and prevented the fire from spreading.

Mathematical Conception.

Let us see now from a simple mathematical point of view the importance of small inductances and capacities when dealing with high frequency currents.

Now the voltage induced in an inductance is given by

$E = 2\pi f LI$, where E is in volts
f = frequency of current
L = self or mutual inductance in henries
I = current in amperes.

Thus we see that the induced voltage (and hence current) is directly proportional to the current in the nearby circuit and also directly proportional to the frequency of the current. Now with normal alternating currents for power or lighting the frequency is usually of 25 or 50 cycles per second but with radio currents frequencies of 50 000 cycles or 1 000 times as great are quite low. Thus with radio currents the voltages induced will be 1 000 or more times that which would result if the circuits were carrying ordinary alternating currents.

A similar formula applies for the currents induced due to capacity, *i.e.*,

$I = 2\pi f CE$, where I is the current flowing "across" the capacity and
C = capacity in farads.

Hence the "stray" current is again proportional to the frequency which is very large. Another important point is borne out by these equations. The higher the frequency (*i.e.*, the shorter the wave-length) the greater are the stray currents caused. Hence in designing short wave receivers where the frequency is extremely high one has to be even more careful of any unintentional inductive or capacity couplings between leads or components.

Digitized by Google

Some Facts and Notions about Short Waves.

A Lecture delivered by Capt. DUNCAN SINCLAIR, before the Radio Society of Great Britain, on 16th December, 1925.

[R110

LAST month Captain Miles, of the Admiralty, read a paper before the Radio Society of Great Britain entitled a "Review of Short Wave Development." At the time the Society honoured me by requesting this paper, I chose practically an identical line of thought, but on reading Captain Miles' paper, it at once became apparent that my remarks would need modification if I were to present you with fresh subjects.

I have therefore reviewed my paper to make it follow more on the lines of a sequel to this former paper, and have made it more theoretical and suppositious. At the same time my remarks have become briefer, which may be an advantage as giving more time for discussion.

I am going to define a short wave as one of the order of less than 100 metres length. Perhaps, before so many short-wave experts, some of my points may prove to be ancient history, but they may still, for all that, be worthy of consideration.

It rather seems that the majority of experimenters approach short waves with feelings of considerable trepidation. They have heard that the frequencies are enormous, hand capacity effects are simply terrific, and so on ; and before they ever come to handle the work themselves they have quite made up their minds that they are attempting the impossible. They expect little or no results, and consequently are not disappointed by failure.

Due consideration of the practical side of the problem does not show it to be so very difficult, however. We still are really dealing in terms of wireless as we understand it for the higher wave-lengths, with comparatively negligible variations ; and we still employ identical components, again with very minor differences. What it really means is that we must expect to exercise rather more care in the construction and operation of the apparatus—not a difficult matter for those who take real interest in their work.

It seems obvious that, if more care is to be taken, the simplest designs only should be tried in the first place. We turn again to the simple straight circuits. And, after all, simplicity and efficiency are so often synonymous.

For the benefit of those who are not great technical experts, I am purposely limiting my language so that it should be comprehensible to the least trained mind.

I propose to deal with certain facts and notions, the latter somewhat my own conception, of phenomena beyond the actual apparatus which occur in this class of radio research. They may be *entirely erroneous*—or, on the other hand, may contain the germs of matters of vital importance. I can merely put them before you for what they may be worth, in the hope that they will help in leading to correct and definite conclusions.

In dealing with wave-lengths which get shorter and shorter as research extends, it would rather appear that a close analogy is to be found in the science of "Heat." Temperature can be reduced step by step, but absolute zero probably never attained, for the purpose in mind at the commencement of the experiment—if it can be attained at all. The matter or substance under investigation will change its nature before its temperature reaches absolute zero.

It is well known that the frequency band of electro-magnetic oscillations which give rise to radio phenomena are only a portion of a much wider band of the same kind, and that the whole band, in its entirety, includes the phenomena of heat and light amongst other things ; and, for all we may know, every phenomenon of which our senses make us aware. We know that the higher we get in the radio frequency band the closer we approach the frequencies of heat and light. Even if we did not already realise this from theoretical considerations, it would not be possible to experiment for long on very short wave-lengths without discovering it practically.

Digitized by Google

I well remember some time ago experiencing a sensation of considerable heat round the closed circuit inductance of my transmitter whilst it was functioning on what I estimated to be something under five metres wave-length, and, on switching off the set, how interested I was to find the inductance quite cold. Similarly, how various glows have occurred at different times in different parts of the circuit.

Given such simple facts we have grounds for assuming that a lot of our reasoning and conjecture may be based upon confirmed knowledge of light phenomena. If we are still in doubt, we have only to follow Clerk Maxwell's mathematical investigations, during last century, of the connection between electricity, magnetism and light. Light, as it is at present understood, is a composite phenomenon due to certain very high frequency oscillations, of slightly different values. One frequency causes our optic nerve to register the sensation of a red colour, another a green, another a violet; while the simultaneous effect of all the visible colours of the spectrum manifests itself as what we call white light. It is well known that by passing a beam of white light through a glass prism its component colours are "bent" in varying degrees and become, in effect, separated from one another. It is well known that light can be reflected by a mirror or other polished surface; and that it can be absorbed by some media and substances. And it is known that interference between two or more light frequencies can occur. Again, it is known that certain very short waves of this band can penetrate certain matter which others are not able to do. For instance, metals opaque to visible light become translucent or transparent under the agency of X-rays. And there is the property of radio-activity. All these phenomena obey very definite laws.

Here is a wealth of data to assist our work with short radio waves. Surely we are not unjustified in expecting the laws of light to have application in the case of radio frequencies so closely situated in the band of general frequencies. In fact, as long ago as the first days of wireless, Senatore Marconi proved the reflection of waves longer than those we are now considering; and more recently has put forward the system of beam transmissions. More recently, again, there has been expounded the theory of the Heaviside layer, by which there is supposed to exist, at a varying number of miles above the earth's surface, a layer of ionisation, constituting a medium of different nature to that of the adjacent electro-magnetic medium. Reverting to our light analogies, we are led to expect, and, in point of fact do find, radio results in conformity with the assumption that the Heaviside layer may be regarded as a medium capable of reflecting, refracting and absorbing electro-magnetic waves. In the first place, you will know that the angle through which a light ray is bent by any given medium, varies according to the colour or wave-length of the light in question. Therefore we expect that a short wave of, say, 10 metres length, will not behave in the same fashion as one of, say, 100 metres, and that is exactly what we do find. You will

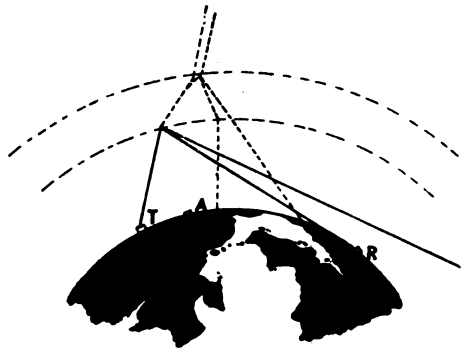

Fig. 1.

have found out, or heard, that whereas a transmission is audible on 10 metres at some distance, it may not be at all audible at some point nearer the transmitter; and that while enormous ranges are obtainable during darkness with a 100-metre wave-length, a 10-metre wave-length is not capable of working any real distance; and that the reverse of such case may obtain during daylight.

An explanation of such occurrences may be given on the basis of the Heaviside layer. The short wave-length, inaudible nearby, has probably acted in the way shown in Fig. 1. *T* is the transmitter, *A* the nearby receiver, and *R* the distant receiver. The wave (thick line) has been reflected by the layer in a similar manner to that in which a light wave is reflected from a concave

Digitized by Google

mirror. But certain portions of the radio wave also enter the Heaviside medium and become refracted through it and either again refracted through into space beyond or internally reflected or refracted back again to earth (dotted lines). Naturally, these reflections and refractions will all depend upon the wave-length, the nature of the reflecting and refracting medium and its thickness. Probably, it is not a uniform medium; probably, also, it is changing constantly. Therefore it appears that we have an explanation of fading, of "distortion," and of the variation of direction finding bearings, amongst other things.

There is little doubt that in the same way that the visible light ray and the invisible light ray are able to penetrate a given medium to varying extents, so one radio wave can penetrate the Heaviside layer to a different depth from that of another. Probably also the reflection and refraction vary to a similar extent. If such is the case, and at the same time we assume that the degree of penetration reflection and refraction is varying, we must certainly have a useful explanation of fading and distortion, and, to a like extent, variation of direction finding bearings.

Various experimenters tell us that fading occurs regularly, that is to say, that we get constantly varying time periods during which we can, or cannot, receive signals from a given station; which would rather indicate that the variations occurring in the layer are uniform in their action at any given period of the 24 hours. It seems probable that in order to receive the very short waves at comparatively short distances during daylight it is necessary to raise the height of the receiver from the ground, either by moving it up a mountain or taking it up in an aircraft. A possible explanation of such a phenomenon has already been outlined by Captain Miles in his paper last month, so that it is possibly unnecessary for me to enlarge upon it.

I am not going to attempt, beyond what has been said above, either to confirm or contradict the explanations afforded by the Heaviside layer theory. If they are correct they serve our purpose admirably for the time being, and, if incorrect, there is at least some vestige of truth in them which is decidedly helpful to us as we are situated to-day. One fact stands out very clearly in all this work and that is that the reactions taking place are profoundly delicate. I have said that whereas a 10-metre wave-length is not apparently capable of working any great distance during darkness, a wave-length of five to ten times that value is quite capable of doing so; and, conversely, while a 60-metre wave-length is not suitable for daylight working, a 10-metre wave-length is receivable at very great distances.

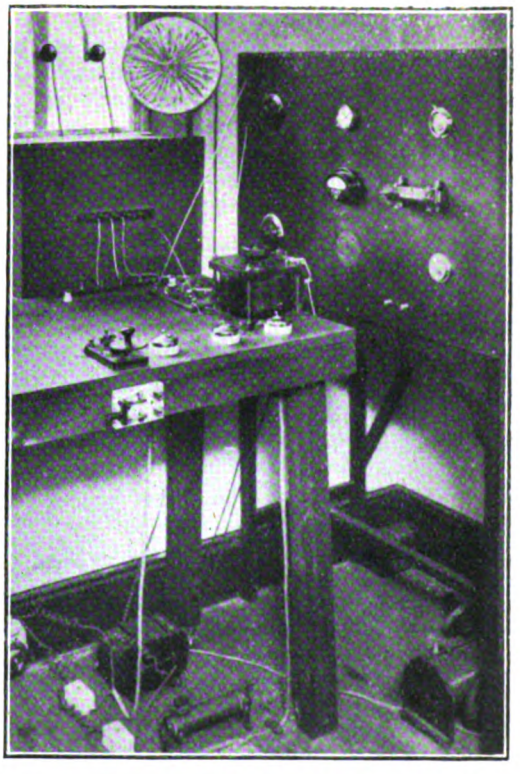

Fig. 2. *Photograph showing the transmitter (20-30 metres) on the right. One broken down condenser was removed at the time the photo was taken, and an oil immersion condenser (on the bench) substituted.*

On the face of it it would seem that as we decrease our wave-length we pass firstly through a band of wave-lengths which are suitable for night work only, and secondly, into a band of wave-lengths which are suitable for daylight work only; and, therefore, we have reason to suspect that at some point we shall find a very small band of wave-lengths, or even an actual wave, which is good for both day and night signalling over a certain distance.

Digitized by Google

In practice it is easily ascertained that for given periods during one day we can quite readily receive signals from, let us say, a given station in the United States, while the next day we are unable to do so on that wave-length, but can readily do so if the wave is changed by one or two metres. This phenomenon most usually occurs in the neighbourhood of 30 to 40 metres; so that it would seem that the wave-length good for both day and night working would lie somewhere within this band.

As far as I am personally able to see at the present time, I rather expect to find that several wave-lengths, or even many in or very near this band will prove suitable for regular constant working, taking into account the distance separating the two communicating stations in each case.

over sea than over land. We know that at difficult times for direction finding work bearings may be taken over the sea with possibly half a degree's error up to distances of perhaps 100 miles, while during the same periods over land the limits approximate to 15 miles and the errors to 5 or even more degrees.

If we allow that the intensity of illumination by the sun's rays may be a factor in ionising the atmosphere and that the intensity of ionisation may vary at the lower altitudes depending upon the amount of cloud, etc., it is quite evident that the amount of ionisation occurring in any particular area is by no means a definite quantity at any given moment even over sea.

It has been established that the mean values of the conductivity of the atmosphere

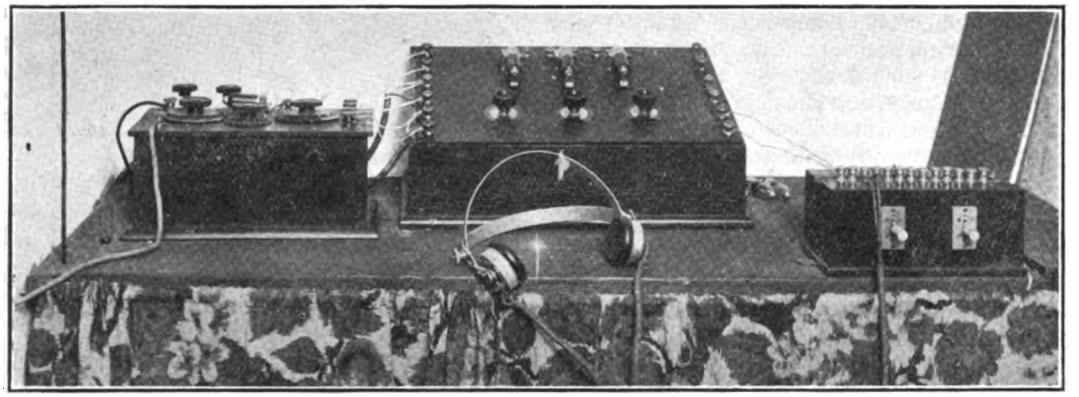

Fig. 3. *The general purpose long-wave receiver, consisting of detector and tuning unit, and 3-valve resistance coupled amplifier. The box on right controls H.T. and L.T. and phones, loud-speakers (for broadcasting), etc.*

If we may, with some justification, assume the existence of an ionised layer at a distance of several miles above the earth's surface, we may also expect to find ionisation taking place nearer and especially on the earth's surface, more particularly in those areas where the nature of the soil is of assistance to the process of ionisation. Take, for example, soils which contain radio active substances. Naturally the structure of the earth's surface is not entirely uniform all over, and therefore it seems that the areas of ionisation on this basis alone are not in themselves quite uniform. It seems an established fact that over the surface of the sea the conductivity of the atmosphere is somewhat better than that over land. It seems that ionisation is much more uniform

in the neighbourhood of the ground vary very considerably for different regions as much as three or four times their standard value. The variation most surely depends on local conditions. Various independent scientists seem in agreement that the conductivity of the atmosphere increases with height above the earth's surface. They tell us that although the first few hundreds of metres above the ground surface have not been sufficiently explored, from the point of view of ionisation, the fact is certain that above certain altitudes and in the highest regions where they have been able to make measurements, the conductivity may reach values of 25 to 30 times greater than on the earth's surface. Their research leads also to the conclusion that the mobility of

Digitized by Google

ionisation varies sensibly inversely as the atmospheric pressure. The ionisation of the air must then increase at great altitudes. The assumption seems, therefore, that there is a layer of ionisation immediately surrounding the earth's surface and extending for some distance above it, decreasing in density as height increases. This layer would appear to be only of a few hundred feet in height and would vary quite considerably in accordance with local conditions. This assumption so far seems to me to explain why it is that at certain points we are never able to receive wireless signals properly. In other words, it seems to explain the problem of the "blind spot" because it is quite conceivable that the ionisation at any given point may be such as to preclude considerably, if not entirely, the possibility of oscillations of a given frequency taking place. I think it is justifiable also to assume that, beyond the temperature and illumination effects of the sun's rays on ionisation, atmospheric pressure may also play a part, or, in other words, that meteorology has quite a definite connection with wireless. Subsequent to forming this opinion I learnt recently whilst in Germany that there are certain parts of that country in which it is impossible to carry out accurate direction finding work during such times as there is bright sunlight accompanied by a sudden fall of atmospheric pressure.

On the assumption that ionisation increases directly in proportion to solar illumination we might expect something of the state of affairs shown in Fig. 4. In the case of perfectly uniform daylight over very wide areas the ionised layer is, perhaps, held in a position of stable equilibrium by some electromagnetic field due to the solar rays; thereby giving rise to comparative density of ionisation and consequent impedance to signals on wave-lengths above the lower limit. We remember, years ago now, before short waves were discussed, how ranges were generally reckoned to be increased by night.

In practice absolute uniformity of daylight over great distances does not occur, owing to the comparatively slight alteration of other factors; and, therefore, we may have a condition of affairs where, for long distances during daylight, the medium, speaking generally, is uniform, semi-obstructive and somewhat variable to signalling, but for shorter distances is to all intents and purposes uniform. To quote an example, D.F. on wave-lengths of 600 to 900 metres during almost any sort of day is good at ranges of, say, 100-150 miles. It remains to determine practically whether the error increases as the distance between the two operating stations, or whether we find larger errors at greater ranges, or, again, whether D.F. on the shorter waves, *i.e.*, those below the suspected low limit, is impossible. From my present experience this latter is the case.

At night time, the ionisation may become considerably non-uniform, even, in fact, being widely broken up, and that waves of lengths above the low limit are vastly affected; while the shorter ones are unaffected. I know, too well, that ground

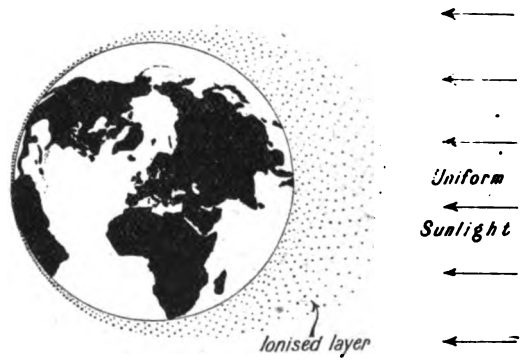

Fig. 4.

stations taking bearings of aircraft during night flights are very often considerably in error, working on the wave-lengths previously mentioned, but have no experience as to whether the shortest waves, if it is possible to use them for D.F., would prove reliable. It would not be surprising to find that they would prove so since they very likely behave in the way that a series of machine gun bullets behave with most obstructions in its path. The "pick up" is so large in a short space, for these very short waves, that D.F. does not seem hopeful at present.

It does seem that the stronger the signal the less interference it experiences at night, and the straighter the path it follows. If this is true, and if also it is true that the density of ionisation increases the nearer we approach the ground surface, then the signals received on the ground from an aircraft are much more liable to variations than those received on the aircraft from a

Digitized by Google

ground station. In the latter case the maximum transmitted energy exists in the region most liable to cause trouble and, therefore, forces its way through with little or no damage being done. As it approaches the aircraft, and gets weaker and weaker, it enters a more and more uniform medium and, therefore, though in a more suitable condition to be affected, is actually less so. This again is mere assumption, but, if true, will enable bearings to be taken, during night flights, on board aircraft and will afford a really invaluable aid to air navigation.

The breaking up of the regular ionisation at night would also seem indicated by another phenomenon. A comparatively strong magnetic field would doubtless have some influence over ionisation, and if the connection between light and magnetism is as close as I have assumed, the attraction or repulsion of huge groups of ions by terrestrial magnetism to or from the poles, with all the consequent re-arrangements and re-adjustments of the particles giving rise to vast changes of frequencies, might conceivably so alter matters as to give rise to light phenomena such as we get in the Aurora Borealis. All that I know from experience is that, some years ago, when I had charge of a group of wireless stations in the far north of Russia, most extraordinary noises became apparent in the receivers after nightfall whenever there was a display of Aurora—especially on one occasion when the station concerned was in the apparent centre of the disturbance. During that evening, for a matter of a very few minutes, Seychelles was read at *tremendous* strength by one of my operators, just before the display. We spent the whole of the night subsequent to the display in trying to work another station in the group only 160 miles away. Remember that this was in the days when the idea of working to the remote ends of the earth seemed really an utter impossibility.

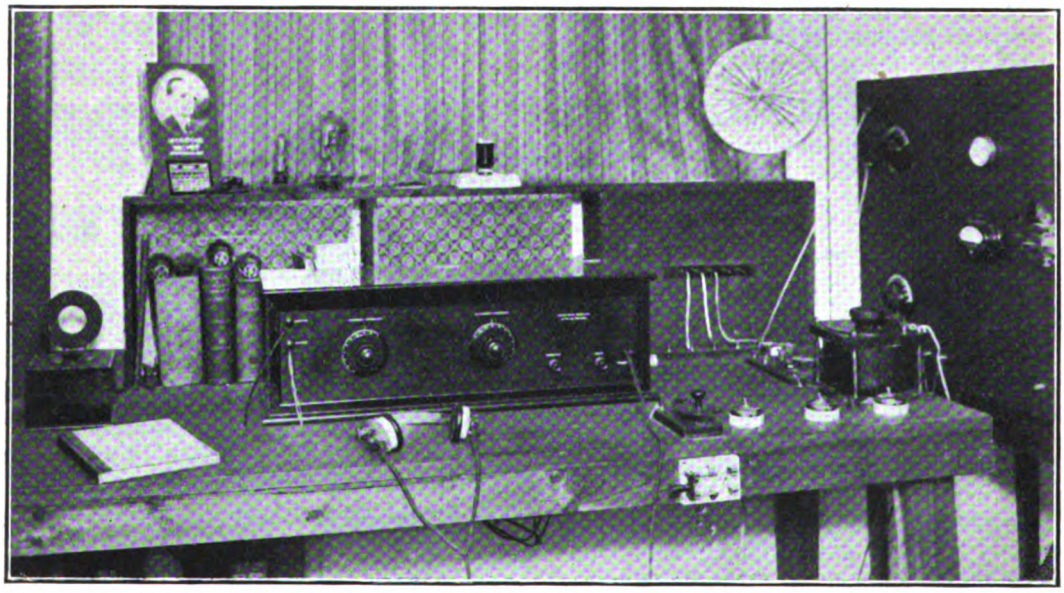

Fig. 5. *General view of short-wave apparatus. The receiver* (10-150 *metres*) *is seen in the centre, and the synchroniser on the left.*

As a mere hypothesis affecting wireless and *not* as a theory perhaps it may be said that the *ground surface* definitely plays a highly important part in the process of ionisation. This surface ionisation decreasing in intensity with height and extending only a few hundred feet above the surface, varying with local conditions, and with the effects of day and night, affords, I suggest, a possible explanation of many of the well-known phenomena existing in our present state of development, and which are not so easily explainable on the theory of the Heaviside layer. It may be that sunlight is not capable of ionising the atmosphere

Digitized by Google

near the ground owing to the fact that those rays from the sun, capable of ionising gases, are not able to penetrate the entire depth of the atmosphere and become absorbed before they reach the earth. It is quite possible that, on the other hand, during certain times of low pressure these rays are able to penetrate to the ground. We all know the effect of reducing the pressure between two electrodes in a glass vessel.

very recent researches, based upon Larmor's work, which will throw a great deal of light on matters at present in the dark. In certain respects its publication would lead me to modify several points in this paper. But it is not yet public property and these views, although only two to three months old, must stand. It is only another example of the speed of development of our science.

I think I am safe in saying that as we

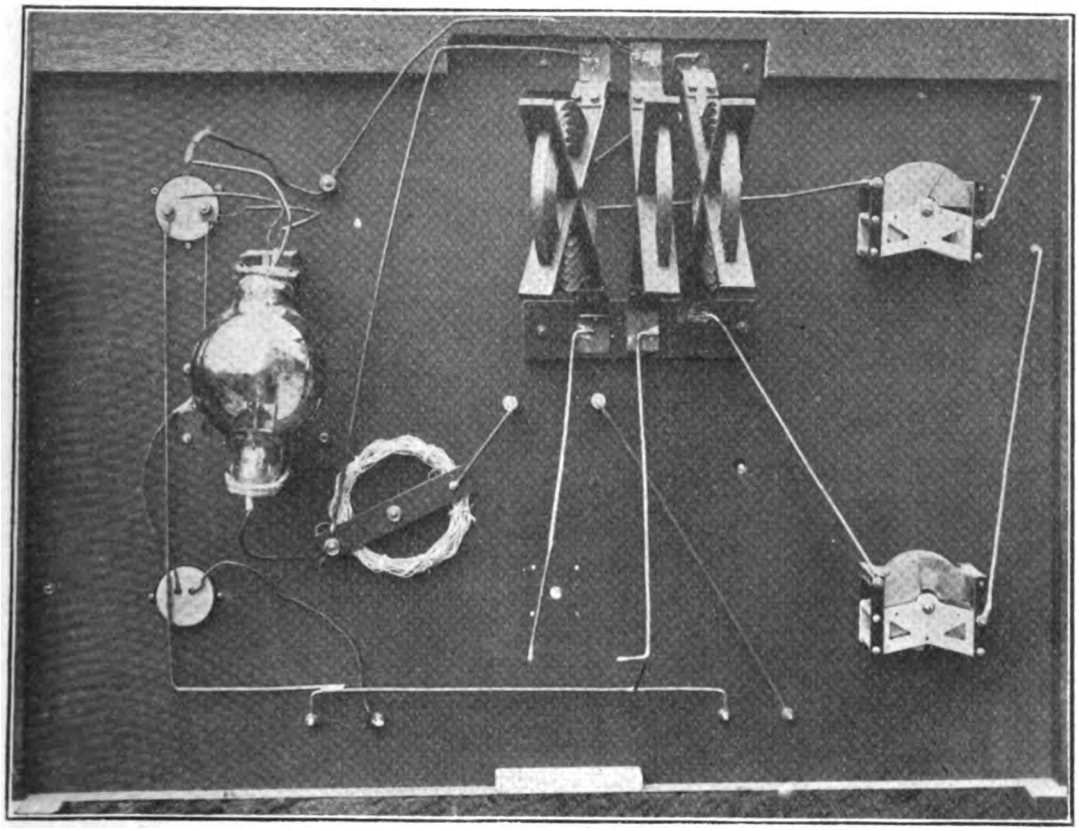

Fig. 6. *Back of the transmitter. The "broken down" condenser is removed (see Fig. 2).*

I have been most fortunate in getting for this paper a preliminary reading by a leading authority on atmospheric electricity. This gentleman has referred me to a document in French under the title of *Electricité Atmosphérique*, by M. B. Chauveau, published by Librairie Octave Doin, Paris. I can thoroughly recommend those deeply interested in this subject to a thorough study of this publication. At the same time there are about to be published the results of some

stand to-day wireless theory generally leaves very much to be desired. We continue to explain phenomena by theories which do not really afford explanations and I think that we must search farther for the true meaning of what is going on. I have put forward in these facts and notions a hypothesis which may lead to the establishment of a definite theory, but I hope sincerely that what has been said will give rise to helpful discussion and that this discussion will

Digitized by Google

lead us to the determination that existing theories need revision. Personally, I shall welcome discussion, both constructive and destructive, but I hope that the discussion will be constructive. It is only too easy these days to present a destructive criticism, especially on so highly controversial a matter. We have, all of us, professional and amateur, an enormous amount of research work before us in this respect, and we must search for positive and definite explanations before we can even begin to understand where our work is leading.

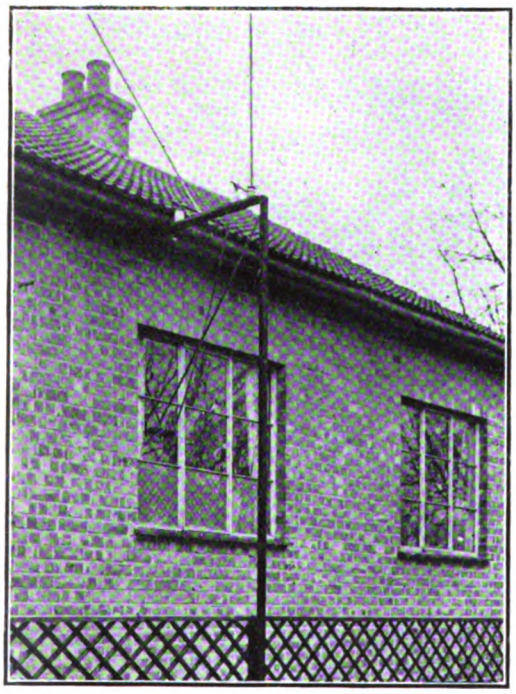

Fig. 7. *The leading-in system. The masts, 40 ft. and 70 ft., are not shown. The short-wave aerial is a 25 ft. vertical wire, and the long-wave aerial 70 ft. horizontal with 40 ft. down lead, average height 55 ft., L-shaped.*

It may be interesting to see one or two views of my private station, 2OC, at Shepperton-on-Thames, which is illustrated in Figs. 2, 3, 5, 6 and 7. These have little or nothing actually to do with the paper, but is perhaps of passing interest to you.

Some time ago the British amateur was given a band of short wave-lengths to experiment with, and the results he obtained were startling to say the least, in so far as ranges and powers were concerned. His work quickly led to minute investigation by the professional radio-engineer, with the result that our present knowledge was the outcome.

An enormous amount of credit is due to those amateurs—those heroic souls who sat far into or even through the night often in complete personal discomfort—to determine what we now know. For once the amateur has shown us the way.

I can only say that we are quite willing again to be led in such a manner.

DISCUSSION.

Mr. P. R. Coursey: It is always interesting to have a paper which gives us another view of what may be a more or less commonplace matter. We are all now in the habit of speaking very freely of ionised layers, Heaviside layers and so on, and that being so it is all the more interesting to have someone come forward with at least some modification of the well-known ideas on that subject. The suggestion of a fairly low ionised layer, although it may not be substantiated—I cannot say as to that—is valuable and it is certainly interesting to learn that some data is probably forthcoming for publication very shortly and will tell us a little more about it. That suggestion of a low ionised layer seems distinctly useful. I would suggest that it might probably follow from that, that there are existing streams of conducting and semi-conducting gas moving about in the atmosphere, at apparently low levels, and if that is the case, these streams of conducting gas—winds of conducting gas—might be a very easy means for accounting for the directional changes which are observed. It is like putting a conducting loop near a D.F. receiver. We all know what errors are produced in that way, particularly, of course, on board ship or aircraft if there is any conducting metal in the neighbourhood of the D.F. receiver. I think, also, that such conducting streams of ionised gas might help to account for the earth-air currents which are observed by meteorologists. The fact that these currents are known to exist means that there must be a movement of electrons near the earth's surface and it is possible that they may exist in comparatively large bulk. The suggestion that these patches of low level ionised gas may account for blind spots, also seems very instructive and I am sure we are indebted to the author of the paper for these very useful and instructive suggestions. Personally, I often feel that the pictures that are shown illustrating or purporting to illustrate the reflections and refractions in the upper ionise layers, seem a little far fetched. They are always so obviously drawn to illustrate what the lecturer wants to talk about, and whilst they are prettily drawn to show rays sent from a station at *A* to another at *C* and missing out another at *B*, it is perfectly obvious that one could draw another line which would connect up with *B* and *C*, and whilst considerations of reflections and refractions, critical angles, etc., obviously lead to limitations as to where one can draw rays, there seems to be a very wide range of possibilities that are not altogether satisfactorily explained by the generally accepted theory, as far as I am aware. This, all the more,

Digitized by Google

seems to render useful the suggestion of other patches of ionised gas at a very much lower level, which may move about, and probably fairly rapidly, by ordinary meteorological convection and wind circulation. Finally, we must thank the author for a very interesting paper which we hope will lead to useful results.

Admiral Sir Henry Jackson: I think the author has given us a very interesting paper, but it is one that must be read carefully to get to the bottom of all the points raised. He puts forward what may be considered the accepted theories of most people, although there are scientists who differ from this accepted idea of the Heaviside layer theory. With regard to the different results from different wave-lengths, it is rather early to speak. Plenty of people are working on wave-lengths from 20 to 100 but very few are doing much with 10 metres and it may be that the 10-metre wave-length will do just as well as the others, but that there has not yet been a receiver at the right place tuned to receive it. Therefore it is a little hasty to say that a 10-metre wave will not go far. Perhaps that will come out in the course of further trials. In my opinion there is no doubt—and also in the opinion of the Radio Research Board—that the deflection of waves from the upper atmosphere has actually been proved by scientific measurements. The paper published before the Royal Society a week or two ago by Prof. Appleton is one proof, and there is proof from a gentleman in America who did it with low frequency. There are other papers by the staff of the Radio Research Board which will appear shortly and will corroborate this. There are really four different methods which have been tried and which prove this, and these down-coming waves can practically be proved to be the cause of fading and other variations. Where they come from and whether they are refracted or reflected is not yet proved, but there seems to be general agreement that the height of this reflection is about 80 kilometres. although it varies. I think it probably varies by day and by night and that is a point I hope we shall be able to take up. There is no doubt it plays an important part in radio communications and it may have an important bearing on the results obtained from aeroplanes. It is rather early to speak, however, until definite systematic experiments have been carried out.

Mr. E. H. Robinson: I am very interested in the paper, but I do not think I can add very much because the author has summarised the present state of our knowledge with regard to short-wave work fairly completely. At the same time we ought to be rather careful about arriving at conclusions with regard to the theory underlying short wave transmission. The period during which amateurs and others have been studying waves below 100 metres is very short, and even our experience of 45 metres dates back barely a year. Therefore I think it is a little premature to go too far on the theoretical side before a larger quantity of practical data has been collected. Thanks to the activity of the T & R Section, I believe the efforts of the amateurs are going to be co-ordinated and their data collected as far as possible, but so far, over a period of a year or two, very few experimenters have actually made consistent observations which they have published. The theories which have been put forward have really been put forward by one or two people and have been reproduced here and there in different periodicals and papers, and we get the idea that they are more generally accepted than they really are. In addition to the phenomena of reflection, refraction and the Heaviside layer effect on short-wave transmission, I should like to draw your attention to the possibilities of the effects of polarisation, which are known to exist but which are not remarked upon so much as is reflection. Any ordinary aerial will set up a polarised wave, *i.e.*, the oscillation will take place in one direction in a plane perpendicular to the direction of propagation. After travelling some distance, the plane of polarisation may alter or a different component in a different plane of polarisation may be introduced by the waves coming via different paths, and you get at the distant point an elliptically polarised wave. In general, what you get over big distances is an elliptically polarised wave and that means that whichever way you send a signal into the aerial it will have some effect. If you consider, however, a fixed aerial and a signal arriving, the inclination of the plane of polarisation may be varied by something in the intervening medium. Here again you have a totally different explanation of fading, and one which probably operates simultaneously with and independently of the reflection effect. I thought it would be interesting to point that out because I think it is very important.

Mr. H. Bevan Swift: The paper has been excellent and full of interest to those concerned with short wave work. I should like to start by thanking the author for the statement he made at the end of the paper, that the amateurs have helped to show the way. I think we are all very grateful, especially the members of the T. & R. Section, for that remark. The author's reference about the simplicity of apparatus for short wave working is very important. The simpler the apparatus the better both as regards the circuits for transmission and for reception. Too many people are coming down to short waves using super-circuits. If you listen down on 45 metres you can hear them tuning on their superheterodynes and it is going to be a great nuisance, and a great source of trouble and interference to those who are trying to do serious work down there. Again, I should like heartily to endorse Mr. Robinson's remarks that it is extremely premature to try to come to any definite conclusions about short wave work yet. We do not know where we are with regard to the Heaviside layer. As I think I remarked in the discussion on Captain Mills' paper at the last meeting, this is a thing which wants organising but we cannot organise it. It is there, and we have got to put up with it and the best thing is to find some means of combating it. To my mind, we shall have to do something on the lines that Mr. Robinson has laid down, *i.e.*, directional transmission. We shall have to treat the Heaviside layer as a sort of cushion against which we shall have to take aim for a rebound in order to get the station we want to send to. It is possible to conceive that some years hence we shall be taking aim with our receivers. We know the locality of the station we want to speak to and by some means,

Digitized by Google

with a directional beam, we shall be shooting at the Heaviside layer, knowing its latitude, much after the fashion that you take aim with an artillery gun. I do not know whether that theory will ever come about but it is something which arises in my mind for the time being. One station with which I work stated they could only receive me at sunset and I arranged a test with that station to try and corroborate this. As the sun was sinking one night I carried out a series of tests for over half an hour and he was able to gauge reception and found that it gave a very peculiar curve, not in the form of a sine curve or an ordinary single peak, but in rather a series of peaks which, of course, I am quite unable to understand. That was only one test, of course and possibly it might not be repeated and if the author can offer an explanation I shall be glad to hear it. The other thing I should like to ask the author is whether he has made any tests with the Hertz type of aerial. It seems to me that this simple aerial offers great possibilities for short wave working and many of our prominent transmitting amateurs are now using that system.

Mr. Maurice Child: There are one or two points I should like to refer to. First of all the lecturer stated that it is possible for heat to be felt from a number of inductances in which oscillations at very high frequency are taking place. You might be interested to know that I can fully endorse that, having had experience of exactly the same phenomenon, in a transmitting set constructed for a local society in the summer of this year. The wave-length used was 45 metres and with an oscillating energy of approximately 100 watts it was possible to feel quite a warming up of the skin with the hand about 2 in. off a three-turn inductance coil about 5 or 6 in. diameter, yet the coil in question was absolutely at atmospheric temperature, as far as one could judge it, during the time the power was expended in it. That is interesting although it does not throw very much light on the main problem which the author has spoken about to-night. I remember reading in a scientific journal some years ago something which has just come to my mind whilst listening to the paper, and I mention it as a matter of interest although it may have no practical utility; on the other hand, one never knows; it may have some bearing. I remember reading an account of a very large volcanic eruption which took place on the Island of Krakatoa in the Japanese Group. I think 1876 was the date, and it was a tremendous eruption. It was recorded that some few days afterwards an appreciable quantity of dust—which was analysed and shown to be similar in character to that thrown out during this volcanic eruption —was discovered in the neighbourhood of London. I remember it was suggested that a certain height above the earth—I believe 40 or possibly 100 miles —there is a perpetual wind, going at a tremendous velocity and that somehow or other these dust particles from this volcanic eruption were caught up and eventually reached England. How much of this stuff is carried about in this way, of course, has never been determined nor have we any information as to how much comes down. Similarly, we have no information as to how much is still up in that wind, but it does suggest to me that if you can get a large quantity of dust carried about in that way the particles will carry electric charges and we do not know what sort of disturbances are taking place at great heights due to the bombardment of these masses of particles of dust against each other or with other matter. It may, as I say, have no important bearing on the subject but if it is a fact that there is this wind, it may possibly account for certain things. When all is said and done, however, we should very much like to know the complete theory of the transmission and reception of waves through space, but I cannot help thinking that even when we know it we are going to have a Dickens of a time regulating our space in such a way as to bring these waves within our absolute control, so that we can positively put a station at a certain point and say the wave-length is to be so-and-so and that it is going to reach that point and no farther. That is the sort of thing we want but it will take a long time. In that connection I think the paper we have had to-night is one we want to make a great deal of use of, because our lecturer has made out a very good case for the work of this Society to be extended and assisted in every possible way. I have in mind particularly the official assistance that is required from the Post Office and from various Government Departments concerned. It is a very serious thing, if, whatever is done in the commercial world to benefit the masses of the people from the purely entertainment point of view and even in the transmission of commercial messages, etc., anything is is done to give those wider facilities at the expense of research into this phenomena. That would be most disastrous. The paper has mentioned work which the amateur has done on certain specific wave-lengths, and a point was mentioned regarding the possibility of 30 metres being the best for signalling between this country and the States. But it is suggested—and I think quite rightly—that there may be a certain particular wave-length which the amateurs could use for stations close by and another wave-length for stations at a distance. If this is the case, it indicates that the amateur experimenter as well as the professional must have good facilities for quickly changing his wave-length when the opportunity occurs at the right moment in his experiments, so that he can sty to the man at the other end that he is getting through. He should be able to change his wave-length, say five metres one way or the other. We must have facilities of that kind if we are going to carry on our work with the maximum efficiency and in the best interests of scientific discovery. At the present moment we have the Government Departments telling us we can only work on 45 metres plus or minus ½ metre, and we get little pinpricks in the shape of letters saying we are going one metre over the proper wave-length. That is antagonism to scientific work. We want reasonable control but it must be reasonable and not simply muddling officialism.

Mr. F. S. Mockford: In the hope of one day being able to give correct bearings in any direction, we have collected a vast amount of information at Croydon by recording D.F. bearings on aircraft, the actual positions of which were known, but we find it almost impossible even in daylight to hope for such accuracy. For instance, the bearing of an aircraft over Maidstone may shift

Digitized by Google

over several degrees within a minute and, in consequence, our D.F. positions have an average error of two miles. One interesting case was that of a machine over Lympne aerodrome, the bearing of which was 5° different to that of Lympne taken at the same time. If anybody can explain that I shall be very pleased. It is rather interesting in view of Mr. Coursey's remarks on streams of ionised gases.

Mr. F. L. Hogg: We have been rather prone to discuss the Heaviside layer and say that a wave will go up in a certain way and be reflected, but are we justified in assuming that we are getting such reflection from the Heaviside layer or that there is such a thing as a critical angle for the Heaviside layer as for glass or any other medium? I cannot help feeling that we are pursuing the analogy between that and reflection and refraction a little too far, because the reflection and refraction of the Heaviside layer which we are assuming is not true reflection and refraction but a gradual bending effect. I thought I would like to mention that point as one worthy of further consideration.

Captain Duncan Sinclair, replying to the discussion, said: I think that Mr. Coursey has very aptly hit the nail on the head when he spoke of streams of ionised gas. I can call to mind one particular case where we were getting perfectly correct wireless transmission and reception over an enormous ravine, some 40 or 50 miles long. We were situated comparatively high at one end, but from another station which was slightly on the flank, we were getting no signals at all. In other words, there was some definite "stream" in that valley. I quite agree with Mr. Coursey when he says that the picture of the Heaviside layer as it is often drawn is a very pretty one, but why does station *A* transmit to *C* and miss *B*? I have never been to the Heaviside layer and I do not suppose I ever shall get there and I am unable, in the present stage of my experience, to answer the question. But there seems to be very little doubt—I am including the remarks of the last speaker in this—that at any given moment the angle of reflection or of the rebound, if you like so to call it, is fairly critical, and that the penetration of a given wave-length into the Heaviside layer varies very much from time to time. Sir Henry Jackson did something which I hesitated to do. He mentioned the Radio Research Board as a possible correcting authority on certain points which I have mentioned to-night. You will remember that I said in my concluding remarks that there is about to be published the results of some recent researches based upon Larmor's work, and it was this particular research that I had in mind, coupled with Dr. Appleton's, for the proof of the existence of the Heaviside layer. As to my remarks about reception on an aircraft as against reception at a land station from an aeroplane, I hope to have something more to say on this later, because early next month we are carrying out tests of night flying with a Vickers machine, with the object of determining whether we cannot get rid of these troublesome errors which the Bellini Tosi system gives during the night, in order to render night navigation by direction finding wireless an absolute possibility. Mr. Robinson called for the co-ordination of the work of amateurs, and I remember that Captain Miles, in his paper last month, besought you all to put down what you do and keep a record. Therein lies the value of your work. We are struggling to find out something about short waves and all of you can help enormously by keeping a log and classifying the evidence on every point. Mr. Swift spoke of peaks of signal strength. A previous speaker requested me not to be too hasty in coming to any decision and I assure him that I refuse to come to any unduly hasty decision on this point. I would just like to make one point. You know that as the sun sinks over the horizon you get a changing series of skies which go practically through the whole scale of the spectrum, under certain meteorological conditions, culminating in the red. As each one of these colours changes, it may be that you get a certain phenomenon taking place which will give you first of all a strong signal and then a weak signal. I give you the idea for what it is worth. Mr. Child wants an extension of facilities, as far as the Society is concerned, as regards wave-lengths and he mentioned the Government Departments. I am connected with the Air Ministry and I can only speak in a personal way. For the Air Ministry, I can say this: we are inclined at least to be friendly, we wish you well and as amateurs we have faith in you.

Mr. H. Bevan Swift: It gives me very great pleasure to propose a vote of thanks to the author for his excellent paper. We cannot have too many papers on the subject of short waves as it is a matter which interests us all. I should like to assure Mr. Sinclair that so far as the remarks he made just now are concerned, we of the T & R section shall be only too pleased to co-operate in gaining information and in carrying out tests in any way we possibly can to increase the knowledge of short waves and help us to progress as a nation. It is with very great pleasure that I propose a cordial vote of thanks to Mr. Sinclair.

Mr. R. J. Hibberd: I have very great pleasure in seconding the motion. There is one thing which struck me in the lecture and that is the close association of meteorology with wireless. I am sure there is much to be done in this direction and in seconding this motion I appeal to all members to carry out some research work in this branch of wireless. I am certain there are many things waiting to be discovered. I have done a little in a small way myself and it has made me realise what a vast field of research it offers. I have no doubt that the next time Mr. Sinclair comes here he will tell us about wave-lengths on the minus side of zero. I feel that we are getting down there.

The vote of thanks was carried unanimously.

Digitized by Google

The Rectification of Small Radio-Frequency Potential Differences by means of Triode Valves.—Part IV. [R134

By F. M. Colebrook, B.Sc., A.C.G.I., D.I.C.

C.—Autodyne (Homodyne) Reception.

20. In addition to grid and anode rectification there is a third way in which a valve can be used for the detection of either continuous wave or modulated continuous wave signals. The distinctive feature of this method is that the circuits associated with the valve are in a state of continuous self-generated oscillation during the reception. Almost any convenient form of self-oscillating circuit can be applied to this method of reception, one of the simplest being that illustrated in Fig. 29, which is seen to be the same as the ordinary grid-rectifying circuit with reaction except that the grid-circuit resistance and grid condenser are omitted.

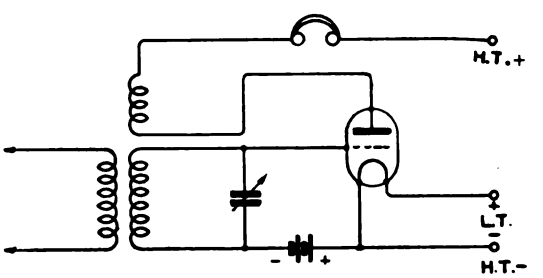

Fig. 29.

A full account of this subject will not be attempted in this paper, as the analysis involved is of so complex a character that it is doubtful if any useful form of mathematical statement could be arrived at. A brief description is included for the sake of completeness, and it is hoped to return to the subject at some future date.

Under suitable conditions of coupling between the grid and anode coils, self-maintained oscillations will be produced in the grid circuit. A milliammeter included in the anode circuit will show a considerable increase of anode current when this condition obtains. Since there is no appreciable change of mean grid potential (the external resistance in the grid circuit being negligibly small) this change of mean anode current must clearly be due to the rectification of the alternating components of the anode current by means of the curvature of the anode characteristic over the range of alternating grid voltage, which may be of considerable amplitude. The conditions are essentially those of anode rectification and heterodyne reception, operating at the maximum sensitivity. The magnitude of the change of mean anode current is very sensitive to the amplitude of the oscillation of the grid circuit. If the latter is tuned to a frequency nearly equal to that of a continuous wave signal E.M.F. induced in the coil by coupling to an aerial or other receiving system, the interference between the two E.M.Fs. will give rise to a periodic variation of the amplitude of the grid circuit oscillation, which variation can be made to occur at an audible frequency. This variation will in turn produce in the anode circuit a corresponding variation, at the same frequency, of the magnitude of the change of anode current, *i.e.*, it will give rise to a "beat frequency" change of anode current which can be made to operate telephone receivers either directly or after low frequency amplification in the ordinary manner.

The above process is usually described as autodyne reception. It is characterised by very great sensitivity. As an example it may be mentioned that an 18-in. frame with a centre tapping connected as a "shunt-feed" Hartley circuit with single plate condenser control of the reaction, *i.e.*, of the oscillation amplitude, followed by one low-frequency amplifying valve, will pick up the carrier waves of all the B.B.C. stations.

Digitized by Google

The application of the above method to the reception of modulated continuous waves is as follows: A carrier wave of frequency $\omega/2\pi$ modulated with a single pure tone of frequency $n/2\pi$ can be shown to be equivalent to three continuous waves of frequencies $\omega/2\pi$ and $(\omega \pm n)/2\pi$ respectively. If an E.M.F. of this character is induced in an oscillating grid circuit of which the oscillation frequency is kept constant at $\omega/2\pi$ then the carrier wave will be in synchronism and will not produce any beat tone. Each of the other two waves, however, will give a beat frequency $n/2\pi$ and a corresponding modulation frequency component of current in the anode circuit. Similarly, of course, for a modulation of any character. Thus, provided the grid circuit oscillation is held accurately synchronised with the carrier wave, there will be produced in the anode circuit a current having the same, or nearly the same, wave-form as the modulation, the faithfulness of the reproduction depending chiefly on the extent to which the change of mean anode current is a linear function of the amplitude of the grid circuit oscillation.

The term "homodyne" has been given to this method of reception. It is a convenient name to distinguish it from the autodyne reception of continuous waves. The success of the method obviously depends on the extent to which exact synchronism can be maintained between the carrier wave and the local oscillation. In practice it would probably be impossible to maintain the exact synchronisation required if it were not for an effect described and analysed by E. V. Appleton.[1] Under suitable conditions of relative amplitude, *i.e.*, if the carrier wave E.M.F. is of a certain intensity compared with that of the local oscillation, the latter will be controlled as to frequency by the former, automatic synchronisation being obtained. The phenomenon is a familiar one in another connection, namely, the wide silence band obtained when using a heterodyne wavemeter too closely coupled to the source of oscillation which is being measured—sometimes an apparent failure of the beat tone altogether, due to the same cause.

This automatically synchronised condition is quite easy to realise at distances up to 15 miles or so from a main B.B.C. station, and, of course, at even greater distances if preliminary high-frequency amplification is employed. In fact it is very probable that many persons habitually receive broadcast transmission in this way, for although a "grid-leak" and condenser are not required for the process, they will not prevent its occurrence, the only difference being that the oscillating condition will produce a decrease of mean anode current instead of an increase. This is due to the fact that the rectification of the alternating grid potential will give rise to a lowering of mean grid potential which more than counterbalances the increase of anode current produced by anode rectification. A distinctive feature of this type of reception is that a small displacement of the tuning of the receiving circuit in either direction will cause a heterodyne howl, since the local oscillation is pulled out of step with the carrier wave. As a matter of practical politics the method is not one to be encouraged, for though the oscillating valve is quite harmless in its controlled state, this condition cannot be reached without a certain amount of preliminary howling, and the local oscillation is always liable to be pulled out of step by subsequent adjustments of the receiving circuit. It is, however, a very interesting as well as a very sensitive method of reception, and one of which the possibilities have not yet been fully explored—probably because it is not very well known.

21. *General conclusions.*

In the present and the preceding paper already referred to, the author has analysed closely the behaviour of crystal rectifiers and various valve circuits as applied to the rectification of various forms of wireless signals. It should therefore be possible to draw up a complete quantitative comparison of the various arrangements on the basis of their efficiency in converting wireless signals into continuous or audible frequency energy changes.

In practice, however, no such comparison of general applicability can be made, since so much depends on the actual conditions of operation and the requirements to be fulfilled in any given case.

Suppose, for instance, that it is a question of converting a continuous wave signal into continuous current energy. It has been shown in the course of these papers how the

[1] *Proc. Camb. Phil. Soc.*, 22, pp. 231-248.

Digitized by Google

maximum continuous current energy obtainable from the rectification of a given high-frequency E.M.F. can be calculated. In every case it is an expression of the form $E_c^2/4R_c$, where E_c is an effective rectified E.M.F. associated with an apparent internal resistance R_c. The following table gives typical results for various rectifying arrangements with a signal amplitude of .7 volt.

Method of rectification.	Opt. resistance load.	Max. D.C. power.
Galena Crystal ..	100 ohms.	200×10^{-6}
Zincite-Bornite ..	1 000 ohms.	20×10^{-6}
Valve. Anode rect.	100 000 ohms.	$.7 \times 10^{-6}$
Valve. Grid rect. ..	50 000 ohms.	50×10^{-6}

These are, of course, round figures, and different individual specimens, particularly of the crystals, might give results differing by 100 per cent. or more from the above values. They do, however, indicate the general nature of the comparison under the stated conditions.

But these conditions are so remote from those likely to obtain in actual reception that the comparison can only be described as academic. In the first place, it assumes a given fixed E.M.F. acting on the rectifier terminals. In practice the E.M.F. available for rectification will depend very greatly on the load imposed on the receiving circuit by the rectifying arrangement, and a much more reasonable basis of comparison would therefore be the energy transformation efficiency under specified conditions, *i.e.*, the ratio of the D.C. power to the high-frequency power necessarily consumed in the process of rectification. Here again, however, the comparison breaks down, as between valves and crystals, for in almost every valve rectifying arrangement the use of reaction gives a wide control of the load imposed on the receiving circuit. With direct crystal reception this control of the load cannot be obtained, so that for any given case there is a fixed optimum circuit condition, a feature which has been discussed elsewhere by the writer.[1]

In connection with this question of energy transformation a point of difference should be noted between the two chief methods of valve rectification. Grid rectification operates in virtue of a load imposed on the receiving circuit. Anode rectification, on the other hand, does not *require* the absorption of any power from the receiving circuit. But again, in practice, inter-electrode capacity minimises this distinction at all except very long wave-lengths, and, in both cases, the load can be controlled by reaction.

At present the most general, though not, perhaps, the most important, application of rectifiers is to the reception of broadcast telephony. In this connection the most important consideration is not the efficiency of the process but the purity of the reproduction of the modulation. From this point of view, crystals have a superiority over valves in two respects. In the first place their rectification characteristics (*i.e.*, rectified current plotted against high-frequency E.M.F.) are very nearly straight lines for signal amplitudes greater than a few tenths of a volt. This ensures that extraneous frequencies introduced by the rectification process shall be of very small amplitude compared with the original frequencies. In the second place, the effective internal resistance to the modulation frequency currents is much smaller than that associated with either type of valve circuit. The significance of this fact from the point of view of purity of reproduction has been dealt with in the first part of the paper. Further, as compared with grid rectification, crystals have the advantage of freedom from the inherent distortion effect described in Section 13. Once more, however, no general comparison can be made, since the acoustic characteristics of the load would also need to be considered.

As between the two different types of valve rectifying circuit, anode rectification is intrinsically far less sensitive as judged by the D.C. power obtainable from the rectification of a given signal. On the other hand, it is free from the grid condenser effect in the reception of modulated continuous waves or in heterodyne reception, and may therefore give an equal or even greater sensitivity at comparatively long wave-lengths (say, 3 000 metres or over).

On the whole, it would seem that the best arrangement of all is one which combines the intrinsic sensitivity and purity of the crystal with the energy efficiency of the valve. An arrangement of this kind is

[1] "What is the Best Circuit for Crystal Reception?" F. M. Colebrook. *Wireless World*. 30th April, 1922 (p. 122).

Digitized by Google

illustrated in Fig. 30. This is essentially direct crystal reception with the load effect of the crystal neutralised by valve reaction. Using a frame aerial with an 18-in. side, 2LO can be received at comfortable intensity at a distance of over twelve miles. A large number of similar arrangements are possible,

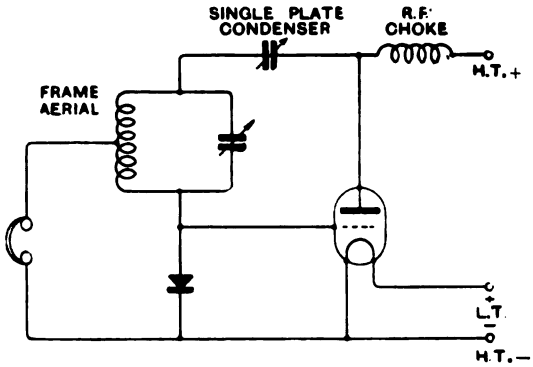

Fig. 30.

their effectiveness depending chiefly on the fineness and smoothness of the reaction control.

Finally, at the end of a somewhat lengthy paper, the writer is conscious of the fact that his treatment of the subject, though fairly comprehensive, is very incomplete This was almost inevitable, on account of the wide extent of the ground to be covered. He hopes, however, that he has succeeded in reducing the analytical side of the subject to manageable form, on the basis of which the fuller elucidation of particular cases can be carried out at some future time.

APPENDIX IV.

$$f(e) = a\varepsilon^{be}$$
$$f'(e) = ab\varepsilon^{be}$$
$$f''(e) = ab^2\varepsilon^{be}, \text{ etc., etc.}$$

Therefore

$$F_1(E) = abG\,(bE/2). \text{ (See equation (7.8).)}$$
$$F_2(E) = ab^2G\,(bE/2)$$
$$F_3(E) = ab^3G\,(bE/2), \text{ etc., etc.,}$$

and from equation (13.10)

$$\frac{1}{R_c} = abG\,(bE/2)\left\{1 + b\,(v - v_0 - v_c) + \frac{b^2}{2}(v - v_0 - v_c) + \frac{b^3}{3!}(v - v_0 - v_c) \ldots \text{etc., etc., } ad\ inf.\right\}$$

$$= ab\varepsilon^{bv_\varepsilon - b\,v_0 + v_c)}G\,(bE/2)$$

and since, from equation (7.7)

$$b(v_0 + v_c)\varepsilon^{b(v_0 + v_c)} = abR\varepsilon^{bv}G(bE/2)$$

Therefore

$$\frac{1}{R_c} = \frac{b\,(v_0 + v_c)}{R}$$

Standard Specifications for Vulcanised Fibre and Press Boards.

TOGETHER with the specification for ebonite recently issued, two other specifications* governing electrical insulating materials have recently been compiled by the British Engineering Standards Association which are of particular interest to the wireless industry. The preparation of the specifications has undoubtedly entailed considerable research work on the properties of insulating materials, and the values given, as well as details of the methods of testing, are based on the results of the researches carried out by the Electrical and Allied Industries Research Association.

The methods of testing have been devised for the guidance of all interested to secure, in the first place, the use of the best available methods of test in the development of improved material and, in the second place, uniformity of practice so that data obtained by different observers may be comparable.

* B.E.S.A. Specification No. 216/1926. Vulcanised Fibre for Electrical Purposes. B.E.S.A. Specification No. 231/1925. Press Board for Electrical Purposes, obtainable from the British Engineering Standards Association, Publications Department, 28, Victoria Street, London, S.W.1. 1s. 2d. each post free.

Digitized by Google

The Piezo-Electric Effect and its Application to Wireless.

By C. W. Goyder (2SZ—2HM). [R351·218

The recent experiments of the writer are given in the following article, with a general outline of the subject. The field is new, and any other amateurs wishing to investigate it will find it most interesting and useful in its practical application.

THE piezo-electric effect was discovered in 1890 by the Curies, but it was of no practical use until very recently, when it was utilised for converting sound waves to electrical impulses (microphones), and conversely for changing electrical impulses into sound waves (loud-speakers). In 1922, Professor W. G. Cady, of the Wesleyan University, Connecticut, developed the theory of the use of the quartz crystal as a resonator, and applied the principle to frequency measurement. More recently G. W. Pierce and Dr. Hoyt-Taylor of America have extended and improved the practical application.

The Piezo-Electric Effect.

The principal substances exhibiting this property are Rochelle salts, cane sugar, tourmaline, zinc silicate and quartz.

Rochelle salts give the greatest piezo-electric response, but, unfortunately, it is difficult to work Rochelle salt crystals, and also, as they are affected by atmospheric conditions, they cannot be relied upon for constancy. For other than constant frequency work they are very suitable, as the crystals can be easily made by evaporating slowly a solution of Rochelle salts.

Quartz is the only piezo-electric substance used in radio work, as it is not appreciably affected by atmospheric conditions and is very strong physically. Its hardness is intermediate between that of glass and diamond.

It is interesting to find what difficulty there is in obtaining a suitable specimen of quartz when such large quantities of it exist. Over one-tenth of the earth's crust is made up of quartz. Silica is chemically identical with quartz, flint and sand are both modifications. When coloured by various impurities it occurs as amethyst, agate, jasper, etc.

The quartz crystal for radio work should be quite clear, without flaws or bubbles. The surfaces should be smooth. A crystal such as shown is a convenient size, from which several slices may be cut. The width is approximately 2 in., length 3 in. Unfortunately, it is not possible to tell by mere inspection whether the crystal will be suitable for radio work. It may be a twin crystal.

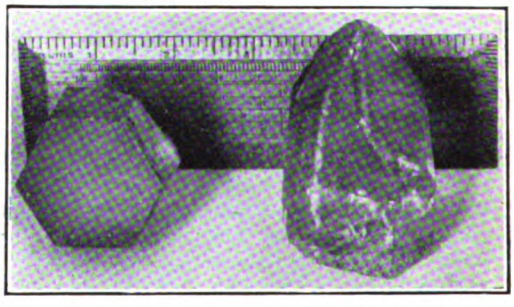

Fig. 1. *A natural quartz crystal (right) and (left) one cut perpendicular to the optical axis.*

Twin Crystals.

The optical property of a plate of quartz cut perpendicular to the optical axis is that it rotates the plane of polarisation of light. However, some pieces of quartz rotate the plane in a clockwise direction. By a "twin" crystal is meant one in which both types of quartz are present in one crystal. It can be seen that the mixture of the two kinds of quartz will diminish or annul the rotation effect. The only method to determine whether the crystal is pure or twin is to cut off the top and bottom of the crystal and polish the surfaces so that it is possible to see through. Then, if reflected light transmitted through the crystal is viewed through a Nicols prism, when the prism is rotated the

Digitized by Google

light is completely cut off in one position if the crystal is pure. If it is twin, the interference between the two types of quartz crystal will allow light to pass through in

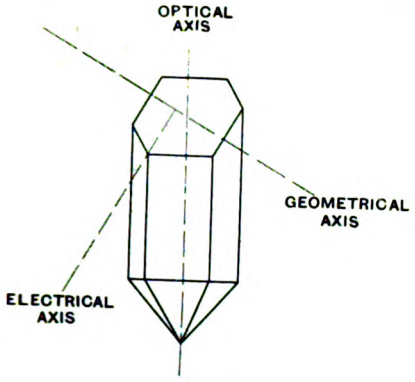

Fig. 2.

some parts of the crystal and not in others, while the surface junction between the two forms shows up as a jagged outline resembling a large crack perpendicular to the optical axis. A pure crystal gives the greatest piezo-electric response and is essential for resonator work. For an oscillator it is not so necessary. Mention is made of this later.

The axes of a quartz crystal are shown in Fig. 2. It is evident that there are three geometrical and electrical axes, therefore in choosing a slice of the crystal for a resonator or oscillator, use is made of the axis which allows the slice to be taken out at the greatest distance from any flaw or bubble. The position of a slice required in a crystal is shown in Fig. 4.

If the crystal is placed upon a flat surface, and a 30 degree set square is held against its face, the line of the set square will indicate the direction of the length of the crystal (Fig. 5). The thickness will, of course, depend upon the frequency required.

It has been stated that it is possible to cut out a slice with the back of a hacksaw blade and carborundum powder, but the author certainly does not recommend anyone to try it! Apart from physical considerations, the difficulty of keeping a saw blade at the correct angle for several hours should be sufficient argument.

When the slice has been cut out, it is comparatively simple to grind the crystal down to the required thickness, using fine carborundum powder, and testing frequently with a wavemeter until the required wavelength is reached.

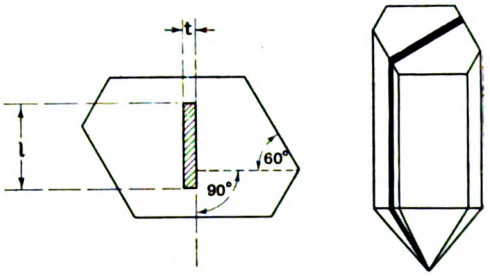

Fig. 4.

A slice of quartz crystal cut in the correct axis and approximately three-quarters of an inch square may be obtained from the J. W. King Lapidary Co., Ltd., 1, Albemarle Street, St. John's Square, London, E.C.1, for £1. The crystal is not guaranteed pure,

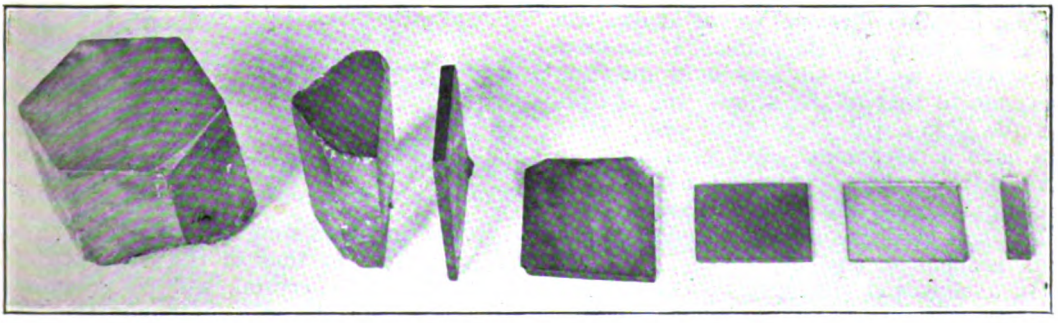

Fig. 3. *Showing how a slice is cut out and subsequently ground. The square crystals are for oscillator work and the small one is a resonator.*

Digitized by Google

or to have oscillating properties. The slice is about 1.5 millimetres thick. While these crystals are very useful for experiments using the quartz crystal as an oscillator, they are not usually suitable for resonators, due to the doubtful quality of the original quartz. The author took his chance with two of these crystals, and they both worked perfectly well as oscillators. One is at present in use in the crystal-controlled transmitter.

A crystal cut accurately and ground with the faces parallel to one or two hundred-thousandths of an inch and within 5 per cent. of a specified wave-length, may be obtained from Adam Hilger, Ltd., 24, Rochester Place, London, N.W.1. These are about half an inch in diameter, are guaranteed to have oscillating properties, and are specially suitable for crystal control transmitters. Small crystals for resonator work only, 2.5 centimetres long, 3 millimetres wide,

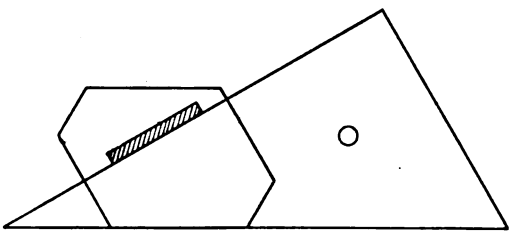

Fig. 5.

and 1.5 millimetres thick in the electrical axis can be had for about 17s. 6d.

The Curies found that when a crystal of Rochelle salt was placed between two metallic plates and pressure was applied, an electrical charge was produced on the plates. They called this piezo-electricity (*piezo* from the Greek, meaning to press). In Fig. 6, force acting in either direction of the arrows will produce a charge on the plates. If the force is reversed so that it acts in a direction opposite to that of the arrows, the charges on the plates will be reversed also. Here we have a mechanical effect giving rise to an electrical effect. It might be expected that by reversing the conditions an electrical effect will give rise to a mechanical effect. This is found to be true.

If a potential difference is established between the plates, the crystal will shorten in the direction *AB* and lengthen in the direction *BC*.

Consider a slice of quartz cut from a crystal as shown in Fig. 2. It is a solid body having a certain degree of elasticity. Therefore, if pressure is applied it will be compressed. Potential energy is stored up in

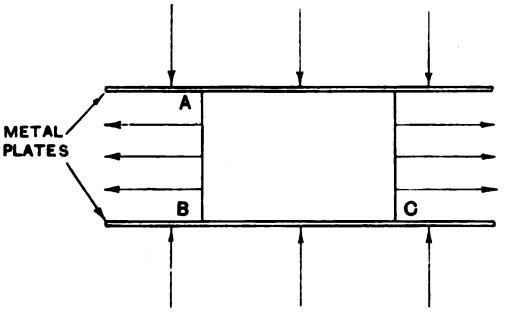

Fig. 6.

it which is tending to restore it to its original position. If the pressure is suddenly released, the slab will try to return to its original shape, but due to its inertia will swing past the position and oscillate until its energy is expended in an exactly similar manner to that in which a violin string, if moved from its normal position and released, will vibrate. The violin string vibrates at an audio frequency, but the quartz crystal vibrates at a radio frequency.

Therefore, if the slab of quartz is struck it will vibrate for a few moments at a definite frequency determined by its density and modulas of elasticity. But, due to the piezo-electric effect just mentioned, during the vibration (which consists of a compression and extension of the faces of the

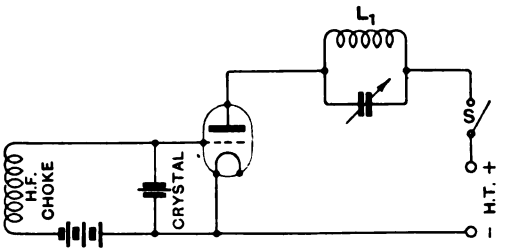

Fig. 7.

crystal), an alternating potential of a frequency, equal to that of the frequency of vibration of the crystal, will be produced on the faces. If we now maintain the mechanical vibration of the crystal we have a constant frequency alternating potential.

Digitized by Google

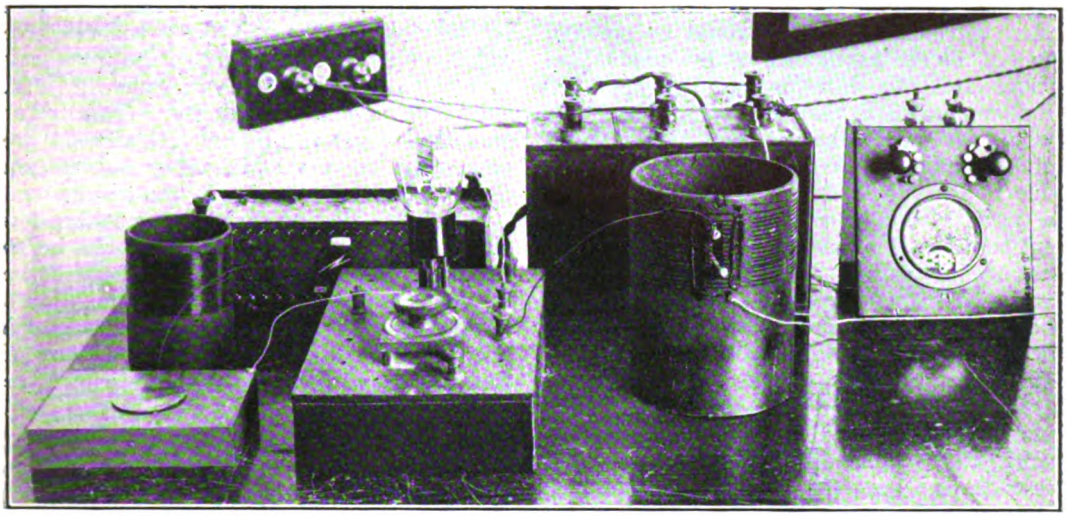

Fig. 8. *The crystal-controlled valve. The crystal is between the brass disc and steel block (left).*

Consider a quartz crystal in the circuit as shown in Fig. 7. If the switch S is closed, the first surge of current produces a potential difference across the inductance L_1. This P.D. is impressed on the crystal by the plate to grid capacity of the valve, and causes the crystal to contract. When the crystal expands, it, by virtue of its piezo-electric property, sets up a P.D. between the grid and filament of the valve, which in turn affects the plate circuit, and so the circuit oscillates. The frequency is dependent upon the mechanical vibration frequency of the crystal, which is inappreciably affected by the variation of anything external to the crystal itself.

For the short wave-lengths used in amateur radio, the frequency dependent upon the dimension "t," Fig. 4, is employed. The crystal will also oscillate at a frequency dependent upon its length and width, which is, of course, a much lower value. The constants of a quartz crystal are such that it will vibrate at a frequency corresponding to approximately 105 metres per millimetre thickness of crystal, but this is, however, quite an indefinite value. Mr. Underhill, of Adam Hilger, Ltd., who is in charge of the work there, has found crystals varying from 100 to 113 metres per millimetre thickness of crystal. The purer specimens apparently have the larger values. The crystal used by the author responded to a wave-length of 104 metres per millimetre thickness.

If a crystal 1 millimetre thick was connected in an ordinary regenerative circuit as shown in Fig. 9, a response would be expected at, say, 105 metres, and another at 52.5 metres, the second harmonic of the crystal. When the condenser is varied to

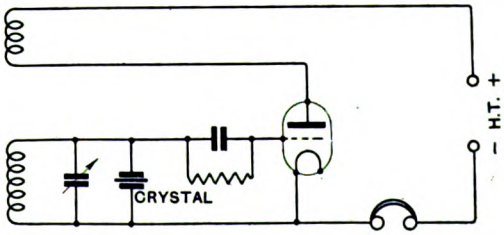

Fig. 9.

pass through 105 metres, the expected click is heard when the set stops oscillating, due to the greatly increased damping at the resonant frequency. Similarly at 52.5 metres. But, with one crystal, contrary to expectations, over 100 smaller resonances were found between these two wave-lengths! Some were very weak, others quite strong, and in a small band of two metres 28 were found packed closely together. There was apparently no symmetrical relation between the strengths or the wave-lengths of the

Digitized by Google

resonances. It is difficult to imagine where these all come from. It would be possible to get all the harmonics of the crystal and those due to interference between the fundamental and harmonics, etc., but this would not explain the unsymmetrical position of the many others. They are probably due to irregularities in the quartz, such as a partial twin formation, inaccuracies in cutting the slice from the correct axis, faces not quite parallel, or possibly a slight variation in density of the quartz. This is borne out by the fact that very pure and accurately cut specimens are almost devoid of these minor resonances.

It is obvious that a crystal such as that just mentioned would be no use for resonator work, due to the difficulty of finding true resonances, but for oscillating work it apparently is immaterial. This same crystal is now in use as the oscillator in the crystal-controlled transmitter. It oscillates at only one frequency, which may be assumed to be the fundamental, the others being too weak to produce oscillation.

Practical Application of the Quartz Crystal for Resonators.

It is very difficult to build a wavemetre which will maintain a reasonable degree of accuracy, due to the many factors which may change and vary the calibration, such as :—

(1) Variation in H.T. or L.T. voltage.

(2) Effect of damp and temperature variations on coils.

(3) Variation due to necessity of changing a burnt-out valve, or that due to sagging of the filament or other element.

(4) Slipping of dial on spindle.

(5) Variation in condenser capacitydue to inevitable warping of the plates.

Considering the effect of error (1)—The grid tuning condenser has the grid connected to one side, the filament to the other. This adds the inter-electrode capacity of the valve to that of the grid tuning condenser, and also the grid to filament resistance of the valve. Variations in the L.T. supply to the filament vary this resistance, which is in parallel with the capacity in the circuit. A resistance in parallel with a capacity increases the effective value of the capacity. Therefore variations in the internal resistance of the valve produced by varying L.T. supply vary the effective capacity in the circuit, and so the frequency is affected. Similarly, variations in H.T. vary the effective capacity. This error and those produced by (2), (3) and (4) are equivalent to the addition or subtraction of a small fixed capacity in the circuit.

The effect of this on a wavemeter calibration curve as shown in Fig. 10 (*a*) would be to cause a symmetrical movement of the curve to position (*b*) or (*c*).

What is now required is a fixed point on the wave-length scale not subject to any of these errors, so that any deviations from the original calibration curve may be detected. This is afforded by the quartz crystal.

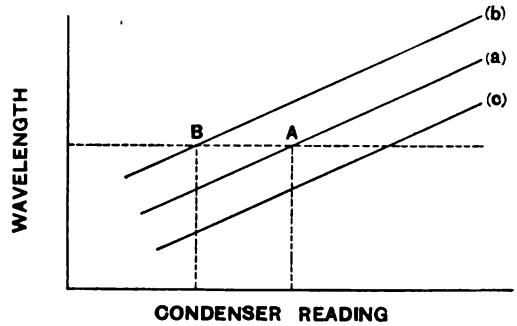

Fig. 10.

If a quartz crystal of known wave-length is included in the circuit, a resonance click will be obtained at the appropriate setting of the condenser, giving the wave-length, say at *A*. If now a reading is taken on the condenser of an unknown wave-length, before looking this up on the graph it should be seen whether the resonance click of the crystal corresponds with reading *A*. If it is found that, due to any of the first four errors, the resonance click occurs at *B*, then the difference in condenser reading represented by *AB* should be added to the condenser reading of the unknown wave-length to give the true condenser reading, from which the correct wave-length may be found.

The resonance click will always correspond to the true natural period of the quartz crystal, independent of the variations in the external circuit. Variations due to errors (1) to (4) will cause the response to occur at different condenser readings, but by inspection of Fig. 10 it is evident that if a

Digitized by Google

certain wave-length is ten condenser divisions above the resonant point of the crystal in curve (*a*) it will still be ten degrees above in curve (*b*) or (*c*), even though errors due to (1), (2), (3) and (4) have been introduced.

The author has found it better to calibrate the wavemeter in terms of wave-lengths per condenser scale divisions on either side of the crystal resonance point. If this is done, errors due to the dial slipping, etc., do not come into question, as any wave-length is a definite number of scale divisions above or below the resonance point, immaterial of the initial position of the dial.

In the case of a particular wavemeter for the 44-46 metre band it was found that the heterodyne note of the wavemeter in the receiver or that of the transmitter in the wavemeter was so strong that a considerable error was introduced, due to the difficulty of getting an accurate zero beat position, and to the tendency of the oscillations to draw each other in step. In the end it was found better to calibrate the wavemeter from 88-92 metres and use the harmonic. In order to minimise the error due to the assumption that a small added capacity produces a symmetrical movement of the calibration curve, the minimum capacity in the circuit should be large. This was afforded by a .000 1μF fixed condenser which was connected across the inductance. The inductance was arranged so that the minimum wave-length was 70 metres. The variable tuning condenser was connected in series with another fixed condenser so arranged that the variable condenser gave a variation from 70 to 92 metres, thus covering on harmonics the most used amateur band from 35-46, 18-23, and also 23-30.

The errors in a wavemeter of this type are very small. There is the 100 cycle error stated on the N.P.L. certificate, if the crystal is calibrated by them. An error of 100 cycles may be allowed in the measurement of the resonance click. Then, if there are 100 condenser scale divisions which may be read in tenths by means of a vernier, the scale may be read to 1 part in 2 000 by judging half a vernier division. This will give an accuracy of about one-third of 1 per cent. over any of these ranges. The accuracy may, of course, be increased by reducing the wave-length range. The main error is introduced by the difficulty of reading the dial.

In Fig. 11 is shown the connection of a wavemeter such as described above. There are several ways in which the crystal may be incorporated in the circuit, in parallel with condenser C_1 C_2 or C_3. In parallel with C_3 the crystal is across the whole coil. This causes it to give too great a response at the fundamental frequency. In parallel with C_1, the response is much weaker; just sufficient to give a well-defined click. The most convenient method was found to be to incorporate the crystal in the construction of the fixed condenser C_2. This condenser must be constructed so that the variable condenser C_4 has the required range. It may be made from two parallel

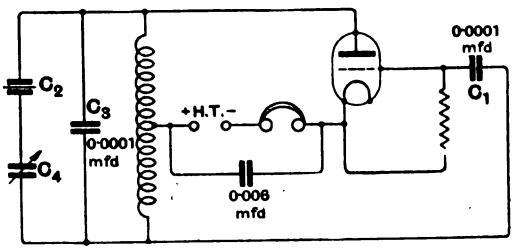

Fig. 11.

copper plates, the size to be found by experiment, and the crystal may be fixed in between the plates. The response will vary in different wavemeters, due to the various capacities in this circuit, and also, to some extent, with the quality of the crystal. This is a matter for experiment. It is quite simple to change the position of the crystal to find the best position.

With regard to the mounting of crystals for resonator work. The crystal may be placed between two plates which actually touch both surfaces of the crystal; or a clearance of a few thousandths of an inch may be allowed. On the longer wave-lengths the latter method appears to give a greater response. On the short waves the former has been found by the writer to be better. It has the advantage that the crystal may be easily held in place by the weight of the plate or by means of a light spring. It is true that the frequency of the crystal resonance is changed slightly if it is mechanically constrained, but this error is quite negligible in comparison with the other

Digitized by Google

errors present in the wavemeter. The mounting should be solidly built. When connecting the mounted crystal in the circuit it must be remembered that the parallel plates of the crystal holder act as a small condenser with the quartz crystal as dielectric, therefore removing the mounted crystal or the crystal from the holder will vary the capacity in the circuit.

Calibration of the Wavemeter.

There are two ways in which the wavemeter may be calibrated.

With the crystal in the circuit the wavemeter may be calibrated against a standard wavemeter. The resonant wave-length of the crystal may then be immediately determined from this calibration before there has been time for errors to be introduced, due to deterioration of the H.T., etc. A curve may now be made in terms of wavelength per condenser degrees on either side of the resonant point, as mentioned before, and this will be independent of the first four errors mentioned.

In the second method it is assumed that the resonant frequency of the crystal is known.

This gives one fixed point on the wavelength scale, but this is really no use unless the form of the calibration curve is known. If the curve is a straight line (*i.e.*, wavelength proportional to condenser reading), then the one fixed point allows the whole scale to be fixed. In almost every case this is not true. It then becomes necessary to calibrate the wavemeter roughly in order to obtain the form of the curve. It is usually symmetrical, but if the condenser is placed so that the moving plates come into the field of the inductance during some portion of their journey from maximum to minimum capacity, an irregular curve will result.

It would be possible to use the calibrated crystal as an oscillator and then to use the various harmonics as calibration points, but as several points are required in a range of ten or so metres the production and especially the fixing of the harmonics would entail considerable work and difficulty.

The error due to variations in condenser capacity, such as produced by warping of plates, loose bearings, etc., has not yet been considered. It is very difficult to get a suitable condenser for a wavemeter. After examining many types, the Igranic low loss was found to have the most sturdy construction. There is practically no chance of a loose bearing and the plates are unusually thick. The extremities of the movable plates are rather flexible, due to their large distance from any support. The principal error would be introduced by the movement of these ends. This was eliminated by soldering a strip of brass across the plates at the point most remote from the centre. This can be done without affecting the action of the condenser. The errors now introduced with age and use will be small. It seems impossible to correct them, as they produce no symmetrical variation on the calibration curve.

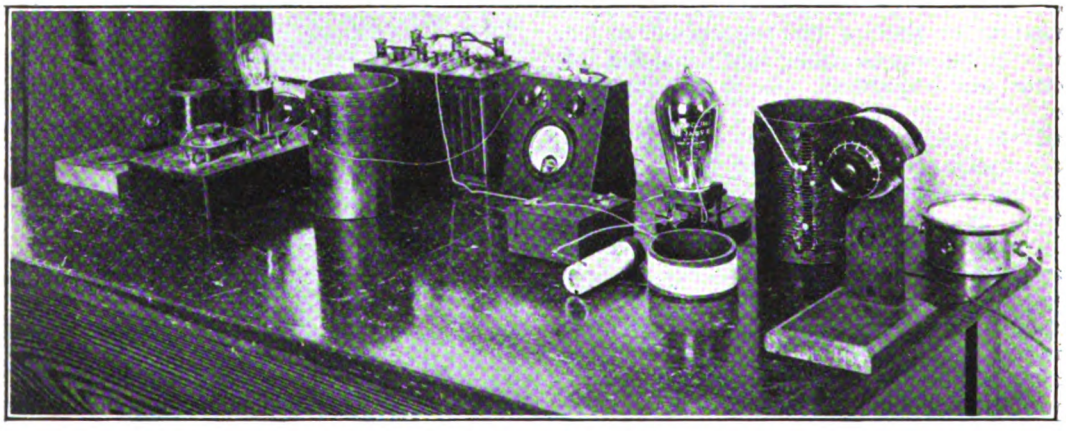

Fig. 12. *The crystal-controlled valve and first amplifier. The grid lead to the next amplifier is seen on the right.*

(To be concluded.)

Digitized by Google

Frequency Variations in Thermionic Generators. [R344·2

Paper read by Lt.-Col. K. E. EDGEWORTH, D.S.O., M.C., before the Wireless Section, I.E.E., on 6th January, 1926.

Abstract.

THE paper is divided into six parts. In Part I. is considered the mechanical analogy of maintaining a pendulum in oscillation, with especial reference to the timing of the maintaining impulses, and the effect of the timing on the rate of the clock.

Part II. considers frequency variations (in a triode oscillator) due to changes in the anode resistance occurring as the result of changes of operating conditions. The author

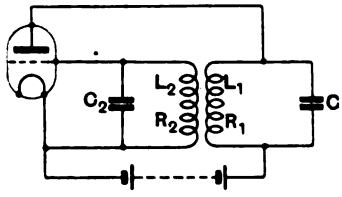

Fig. 2.

first considers the normal coupling resulting from electrode capacity, and then defines *normal* inductive coupling as that in which the coupling assists that due to the valve. The name *Orthodyne* is suggested to describe such a system. An opposite sense of inductive coupling is defined as *reversed* coupling and the name *Antidyne* is suggested. It is

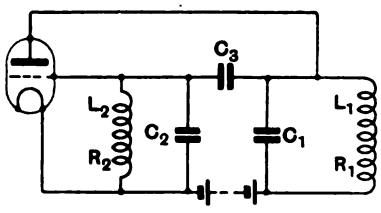

Fig. 4.

pointed out that oscillations may be generated by either normal or reversed coupling, the latter requiring a stronger coupling coefficient.

Resistance coupling between the grid and anode circuits is described as *Rheodyne*. The paper next considers inductive coupling with two tuned circuits (as in Fig. 2*) and its reduction to an equivalent network.

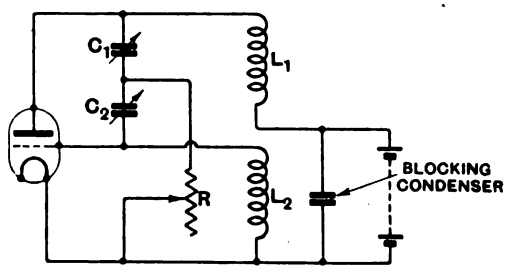

Fig. 5.

An expression is derived for the frequency. The capacity coupled system of Fig. 4 is then considered, with an equation for frequency.

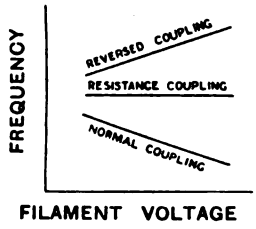

Fig. 6.

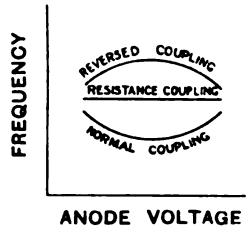

Fig. 7.

The resistance coupled circuit of Fig. 5 is then discussed, and it is pointed out that when $L_1C_1=L_2C_2$ the frequency is determined by the values of L and C, and is independent of the magnitude of the various resistances.

The effect of changes in the anode impedance (due to changes in L.T. or H.T. voltage) is then dealt with. From the expression for frequency, it is shown that an increase of anode resistance involves an increase in frequency, and Figs. 6 and 7 are given as showing the type of variation to be expected.

* The author's original figure numbers are used throughout this abstract.

Digitized by Google

The words "normal" and "reversed" apply to inductive and capacitative couplings. Variations of this kind are described

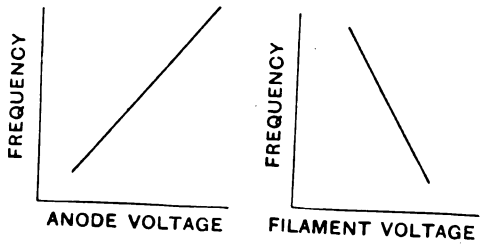

Fig. 8.

as "variations of the first type." The effect of changes in grid potential is discussed and it is concluded that under normal working conditions the damping due to grid current is usually smaller than that due to other causes, and can be kept down to a very low figure, *e.g.*, by keeping down grid current.

Part III. considers irreversible variations, such as do not depend on the nature of the coupling, but on the fact that the E.M.F.

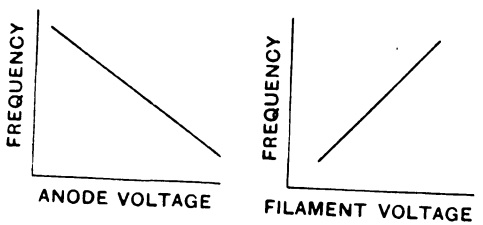

Fig. 9.

generated by the *valve itself* is not a true sine curve, approaching more or less closely to a succession of positive half cycles with the negative half cycles omitted.

An oscillator with tuned grid and untuned anode is shown to undergo further variation due to this cause, of the form shown in Fig. 8, these being called variations of the second type.

In the case of tuned anode and untuned grid, the form is as shown in Fig. 9, these being described as variations of the third type. This type is always present with tuned anode circuits, whether the grid circuit is tuned or not.

A demonstration of many of the points n the author's remarks were given here. The effect of coupling variations, and the possibility of producing oscillations with reversed coupling, were illustrated. Changes of L.T. and H.T. voltage were shown to produce variations, and it was shown that these were less pronounced with small grid damping. Resistance coupling was substituted for inductive, and it was demonstrated that this method gave much less variation of frequency on varying the voltages.

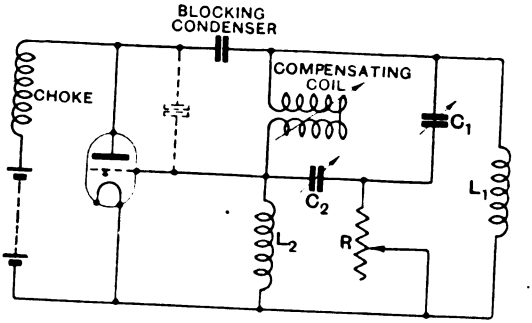

Fig. 10.

Part IV. then proceeds to discuss the design of a Rheodyne oscillator to cover a wide band of frequencies. Arrangements of resistance coupling (additional to that of Fig. 5) are shown in Figs. 10, 11 and 12.

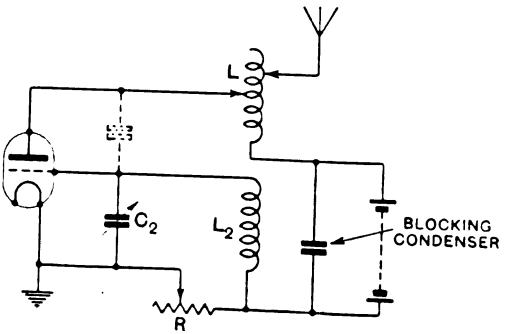

Fig. 11.

It is essential that the capacities of the two oscillatory circuits should be connected to one end of the resistance and the two inductances to the other. It is also necessary that coupling due to stray capacity should be neutralised. This may be done (1) by reversed inductive coupling as in Figs. 5 and 11; (2) by providing an inductive path between grid and anode as in Fig. 10; (3) By a neutrodyne method as in Fig. 12.

Digitized by Google

It is stated that the energy absorbed by the coupling resistance is approximately equal to that absorbed by the grid of the valve, and that the circuit generates oscillations of full amplitude and is applicable to transmitters, master oscillators and wavemeters.

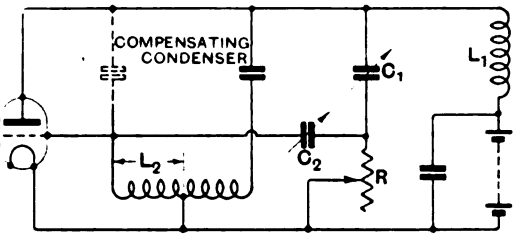

Fig. 12.

For efficiency it is necessary that (1) the grid potential should be approximately independent of frequency, and that (2) stray capacity should be correctly neutralised. Remarks follow on these points, the chief conclusions being (1) for a generator without anode tap, the same tuning method must

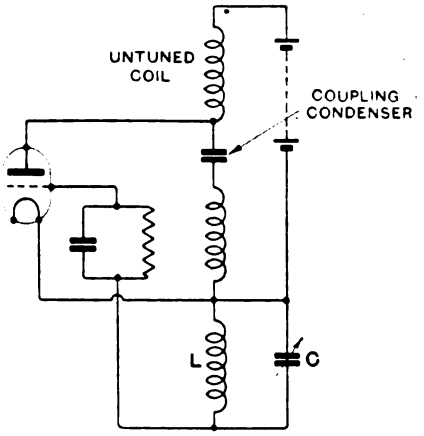

Fig. 13.

be adopted for each circuit, while for generators with anode tap it is immaterial whether the grid circuit is tuned by condenser or variometer; (2) For generator tuned by variable condenser, it is desirable to work with small coils and large condensers, while the ratio of mutual inductance to anode coil inductance must be kept constant.

In Part V. is discussed the design of an Antidyne oscillator to cover a wide band of frequencies. This should make use of a combination of reversed capacity coupling and reversed inductive coupling. The reversed capacity coupling is most effective at the higher and the reversed inductive coupling at the lower frequencies. Figs. 13 and 14 are suggested as suitable for untuned anode and untuned grid respectively.

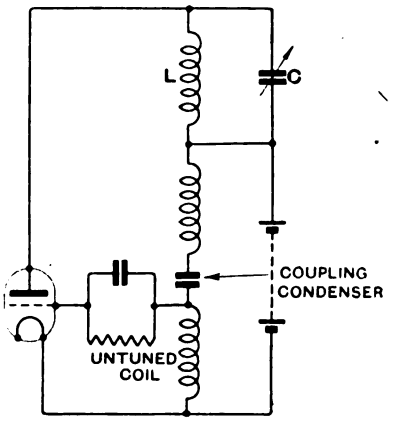

Fig. 14.

In Part VI. the author deals with experimental results and practical applications. With an oscillator of about 5×10^6 cycles, results are shown of the variations (cycles per second) against (1) anode voltage and against (2) filament voltage for various types of coupling, *i.e.*, normal, reversed, half normal, half resistance, resistance coupling, etc. The effects of grid damping are then shown in a further series of curves, where frequency variation is plotted as before for various values of grid leak and different types of oscillator, *i.e.*, Orthodyne, Antidyne, etc., with different arrangements of tuned and untuned circuits.

Lastly are considered practical applications of the results, these applications being chiefly wavemeters and transmitters, including master oscillators. Three solutions of the problem of a constant frequency generator are offered from the results; (1) Rheodyne; (2) Orthodyne, with grid bias and grid circuit untuned; (3) Antidyne, with grid bias. The relative merits of these are briefly discussed. Future possibilities are also briefly mentioned, including the possibility of a generator constant within the part in 50 000 for wave-lengths of the order of 30 metres.

Digitized by Google

An appendix deals with several of the mathematical expressions used in the text.

DISCUSSION.

The paper evoked considerable discussion which was opened by **Major A. G. Lee.** Major Lee referred to the tuning fork control as a satisfactory solution of frequency stabilisation, but thanked the author for having tackled the subject from a really fundamental basis. He considered that a physical interpretation of the circuits was helpful and illustrated his remarks more particularly with the Colpitt's circuit. He also suggested that the Dynatron circuit might be useful as a constant frequency system.

Mr. G. Shearing discussed some of the experimental results and the use of the Rheodyne as a master oscillator. He illustrated a resistance coupling method for applying a master oscillator to a power system, and referred to M. Fromy's circuit for constant frequency (see abstract in E.W. & W.E., December, 1925). Finally he took exception to some of the author's nomenclature.

Dr. R. L. Smith-Rose spoke on the subject of frequency variations in relation to interference, quoting observations made at the N.P.L. He also took exception to some of the nomenclature.

Mr. Warren criticised the author's mathematical treatment of inductive coupling, suggesting an alternative solution, which he illustrated with equations.

Mr. G. W. N. Cobbold referred to previous work on the subject by Eccles and Vincent, and suggested that apparent discrepancies between these and the results of the author were possibly due to differences of voltages according to the couplings used. He also discussed the change of frequency due to a change of valve.

Lt.-Col. H. P. T. Lefroy spoke of the importance of the subject, more especially from the point of view of small portable sets for Service purposes.

Prof. C. L. Fortescue dealt with the effect of the resistance in a resistance coupled system. He also discussed the mathematical expressions both of the author and of Mr. Warren.

Mr. Phillips spoke briefly on the practical difficulties involved in the apparatus for the 1 in 50 000 accuracy suggested by the author.

Col. Edgeworth briefly replied to the discussion, and a cordial vote of thanks to the author was accorded on the motion of the Chairman (Major Binyon).

Universal Testing Volt-Ammeter. [R260·251

THE home experimenter invariably feels the need for a testing instrument fitted with suitable interchangeable shunts and series resistances and calibrated so that the currents and potentials customarily met with can be determined with reasonable accuracy. A measuring instrument of the moving coil type can, of course, be easily fitted with shunt and series resistances to read over a wide range, but if accuracy is to be maintained, the resistances must be robustly built and a reliable form of construction adopted for attaching them to the terminals of the moving coil instrument.

Messrs. Fonteyn, Gilbert & Co., Ltd., 6, Blandford Mews, Baker Street, London, W.1, are marketing a universal continuous current meter provided with numerous terminals and shunts so that the scale, which carries three divisions, and is subdivided into tenths has maximum scale readings of 6 and 120 volts, 3, 30 and 120μA and with external shunts 1, 6 and 30 amperes.

Compared with a laboratory instrument, the scale reading can be taken as reliable within $\pm$ 5 per cent., which is a satisfactory degree of accuracy for general testing.

Digitized by Google

Rectifiers for High-Tension Supply.

By R. Mines, B.Sc. [R355·5

Part VI: Vacuum Arc Rectifiers

(*continued*).

XI.—The Use of an Independently-heated Cathode.

IT was hinted in Part IV. that independent means may be used for keeping the cathode in an arc hot enough for thermionic emission. Such a procedure adopted in the mercury arc rectifier, for example, would eliminate the difficulty of extinction of the arc and hence overcome its greatest disadvantages.

For working in a vacuum the only practicable way of producing heat at the cathode is by passing an independent electric current through it. The convenience with which this may be done is dependent upon the electrical resistivity of the cathode material as well as its thermal properties—in most cases it is necessary for the cathode to be shaped into filament form, the rise in temperature produced being uniformly distributed over the cross-section.

There are obvious difficulties in arranging a cathode of liquid mercury to fulfil these conditions. But apart from these the temperature limit renders the use of mercury impossible—for, under the conditions of the vacuum arc, mercury boils at about 70°C. (the working temperature of the mercury vapour arc), whereas a "yellow heat" at least is required for effective thermionic emission. However practicable then the attainment of such a temperature may be under the extremely localised "hot-spot" condition of the mercury arc, it is not possible to realise it with a filament of which the whole cross-section is heated.

XII.—Application to the Vacuum Arc.

If a heated filament is to be used as cathode in a "vacuum arc" it is necessary then that it shall be made of a more refractory material—this carries with it the disadvantage that there will be no "vapour of the electrode material" available to carry the discharge with a low ionisation potential, because of the temperature limit imposed on the discharge by the containing vessel.

In fact, the discharge ceases to be an *arc*, according to the definitions that we have given: it can be carried only by the residual gas in the tube.[1]

This modification, therefore, would appear at first sight to be a retrograde step in developing the utilisation of gas discharge phenomena for rectification. Actually there are some further apparently backward steps awaiting our consideration before we shall be in a position to discuss the latest improved apparatus.

XIII.—The "Metastable State."

It has been stated that normally the velocity (or rather the energy) of a bombarding electron must not be less than that corresponding to the *ionisation potential* of the atom it strikes. However, if it is less, but still does not fall short of the *resonance potential*, an internal change may take place in the atom, accompanied by absorption of the amount of energy corresponding to this potential. Further, an atom which has suffered such a change (it is said to be "excited") tends to revert to its original state, the extra energy being rejected in the form of electro-magnetic radiation.

Recent experiment[3] reveals the fact that an atom may remain in the excited state for a definite average time—hence the term "metastable." In the case of mercury, for example, the average life in this state was found to be $\frac{1}{42}$ of a second.[4]

---

[1] Incidentally it is quite feasible for experimental purposes at least to distil some mercury into the tube so that the "residual gas" is mercury vapour. Actually the later developments to be described prohibit the use of mercury vapour in this manner.

[2] See E.W. & W.E., Vol. 2, p. 844, Oct., 1925.

[3] By M. Marshall; see *Science Abstracts* "*A*," No. 641, March 1925.

[4] This corresponds to the first resonance potential at just under 5 volts; mercury also has a second resonance potential (about 6 volts) occurring before the ionisation potential of 10.4 volts is reached: the life of this second metastable state was found to be 1/170 of a second.

Digitized by Google

XIV.—"Cumulative" Ionisation.

The useful result of this state of affairs is that if an atom in a metastable state is bombarded by a second electron before it has had time to revert to its normal state, the energy this electron need possess to complete ionisation of the atom, is only that corresponding to the difference of the ionisation and resonance potentials. The ionisation of the atom is therefore accomplished virtually in *two stages*, by two electrons neither of which possesses energy as much as corresponds to the ionisation potential. In the case of mercury, having two metastable states at energy levels lower than that of the ionised atom, ionisation may be accomplished in *three* stages.

It is at this point that we see a real advantage in an independently-heated cathode—with it the supply of electrons is under control, and with a good size filament intensely heated the stage may be reached where this "cumulative" ionisation can take place: for obviously it requires the bombarding electrons to be very much more numerous than suffices for an ordinary type of arc discharge. When this occurs, the discharge can be maintained with a very much smaller P.D. than was previously necessary.

XV.—The Correct Gas Pressure.

As we have said, the type of discharge under consideration is unlike the atmospheric arc, for example, in that it is not necessarily electrode vapour that takes part in the discharge by becoming ionised. Further, so far the use of an independently-heated cathode has been postulated as an essential condition; under this circumstance, the discharge may well be called an "*assisted arc*" (in contradistinction to a *self-maintaining* arc).

Nevertheless the mechanism of the discharge is similar. The positive ions bombard the cathode (now the filament) as before; and though the electron emission may be unaffected by it, such bombardment usually causes disintegration, and with an electrode of filament shape this is particularly disastrous.

One way of reducing the amount of bombardment is to reduce the gas pressure and hence the positive ion density. This method, however, is inadvisable partly because it involves a corresponding reduction in the current carried by the discharge.

Increasing the gas pressure conversely increases the ion density and so tends to augment the intensity of bombardment to which the cathode is subjected. On the other hand, the increased density of the gas reduces the mobility of the ions (by reducing their mean free path) and hence their destructiveness.

This reduction, however, is not a linear relation, and it has been shown as a result of painstaking investigations that by a proper adjustment of the gas pressure disintegration can be almost eliminated—it appears that the product of the average destructiveness of each ion and their total number, representing the total destructive effect on the cathode, passes through a minimum value as the gas pressure is varied. This optimum point occurs at rather less than $\frac{1}{10}$ of an atmosphere (in the case of argon).

XVI.—Choice of Working Gas.

A reason is now apparent why mercury vapour is unsuitable if the conditions described above are to be established. The pressure stated is about one thousand times that at which the mercury vapour arc operates; and at this higher pressure the boiling point of mercury, and hence the *minimum* operating temperature in the arc, is about 240°C.

Unfortunately most gases exert a deleterious effect on the electron emission from a hot cathode, some (for example, oxygen, either alone or in combination) almost inhibit it. Of the gases that have been tried in developing gas conduction rectifiers, *Argon* has proved the most successful, largely because it does not lower the emission from a tungsten filament. (Probably other gases from the "inert" group would answer; but argon is the most suitable).

XVII.—Purity Essential.

The effect of certain gases on thermionic emission is sufficient reason that every effort should be made in constructing an apparatus to operate on this principle that the working gas should be kept in as pure a state as possible—if necessary means of purification must be provided that shall remain in the

Digitized by Google

apparatus after manufacture and account for any impurities that may appear during its operation.

In addition to the above effect there is the effect on the discharge itself to be guarded against. Unless the gas is pure it is not possible fully to realise the condition

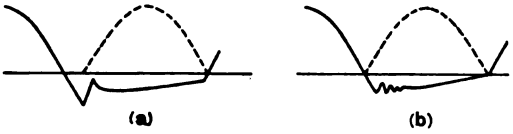

Fig. 1. *Oscillograms of "Tungar," rectifier on A.C. supply (a) without purifier, (b) containing an active purifying agent. The full line curve represents the P.D. across the arc and the dotted line the current.*

of low arc drop that ensues from the cumulative ionisation of atoms in the metastable state. But more important than this is that, with the filament hot, on application of the P.D. between anode and cathode a much higher value is necessary to *start* the "assisted arc" discharge than is required even to maintain it. This introduces an undesirable factor of erratic behaviour apart from increasing the power losses in the device. (See Fig. 1.)

XVIII.—The "Tungar" Rectifier.

This rectifier is an apparatus in which the conditions whose development has been outlined above are realised as fully as is possible in a commercial production. Fig. 2 illustrates the construction. The filament is of plain tungsten (*i.e.*, the "bright emitter" type) and is made very thick, partly to withstand the residual ionic bombardment, but

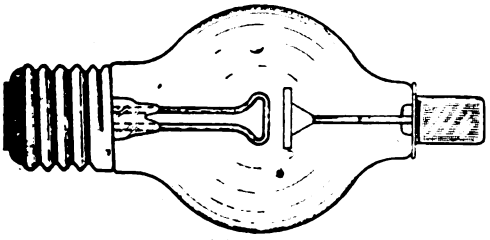

Fig. 2.
Arrangement of electrodes in the "Tungar" rectifier.

primarily to provide a sufficient thermionic emission. Connection is made to it through a standard screw lamp cap. The anode is a disc of graphite mounted in proximity to the filament.

After assembly, the containing glass bulb is exhausted as completely as possible, the process being assisted by "baling out" the bulb and both the electrodes, just as for a high-vacuum device. When this is complete, argon is introduced into the bulb at exactly the correct pressure.

In addition to this careful exhaustion and filling the early models at least were provided with an active purifying agent, which was either attached to a filament lead or incorporated in the anode material. Thus when impurities became excessive, the arc drop increased, the electrodes both rose to a temperature higher than normal—this caused some of the purifying agent to be evaporated and so to do its work by combining with the unwanted gases. Magnesium is a good purifier, owing largely to its affinity for oxygen; it is the condensation of some such material as this that causes the mirror-like deposit on the inner surface of the glass of many of these rectifiers. (The same appearance is commonly found in "dull-emitter valves," and is due to a similar cause.)

XIX.—The Rectification Action.

The manner in which rectification is effected by the "Tungar" bulb is very similar to that of the arc, either atmospheric or under reduced pressure. There is one electrode maintained hot enough to supply negative ions that ionise the residual gas, while the other remains cool enough to be unable to supply them; and in the interval between successive conducting periods, that is while the applied alternating potential is reversed in direction, the gas de-ionises by recombination of the ions and so ceases to conduct.

In this connection it is appropriate to mention some decided advantages that the Tungar rectifier has over other forms, for example, the mercury vapour rectifier. Pure argon gas it is found shows an extremely rapid recombination of its ions on withdrawal of the stream of bombarding electrons, no matter how heavy the preceding discharge may have been. This factor makes for certainty in operation and reduces the risk of "flash-over."

Further, due to the small drop of potential in the arc, the heating of the electrodes by either positive or negative ions is relatively

Digitized by Google

small. Thus, for a given construction and material for the anode, for example, the safe limit of current at which it will remain sufficiently cool is considerably higher.

XX.—Manner of Use.

This rectifier is always connected to the A.C. supply through a transformer, for two main reasons: First, the reactance of the windings (which, if necessary, may be increased above that ordinarily used in a transformer) acts as the stabiliser that is always necessary with a device not having a "rising characteristic" (see Fig. 3). Secondly, owing to the fact that the arc current is distributed over the length of the filament, it is necessary that it should be heated with A.C., to avoid unequal heating of the two ends and consequent shortening of its life.

When a rectifier is run near its full current rating it is found practicable to cut off the filament heating current, since the residual ionic bombardment is sufficient to maintain the temperature of the cathode. Under these circumstances the discharge is *self-maintaining* and is nearer to being a true arc. The "arc" usually concentrates on one part of the filament, making a "hot-spot" which moves towards the filament lead connected to the output circuit as the current is increased.

This localisation of the discharge becomes more pronounced at smaller current values, and this tends to shorten the life of the filament unduly. Further, the arc drop under the self-maintaining condition is much increased, and the larger power loss that

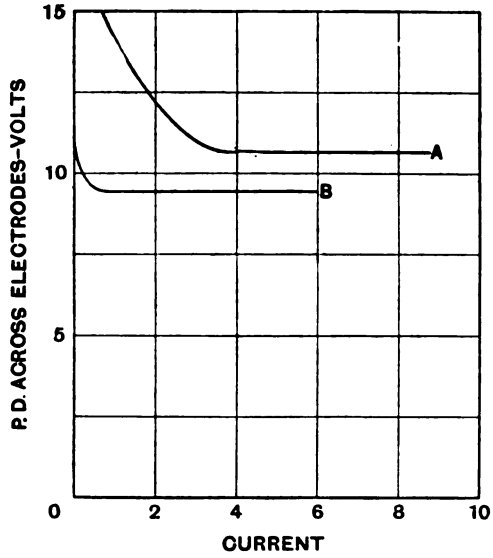

Fig. 3. *Characteristic curves of a "Tungar" rectifier showing relation between the anode current in amperes and the P.D. across the electrodes (A) without filament current and (B) with filament heated independently.*

results more than offsets the saving of filament heating power. Hence it is usually more economical to keep the filament excited continuously.

Amateur DX in South America.

By Ch9TC (Los Andes, Chile). [R545·009·2

THINGS move so fast nowadays that my note in E.W. & W.E. of November (p. 930) already needs supplementing.

Argentine. — The station BA1 (Buenos Aires) has recently come very much to the fore, having worked England, Tahiti, New Zealand, Japan, and, of course, U.S.A., etc., with 20 watts nominal.

Uruguay.—New Zealand with 10 watts and 5 watts nominal, Chile with 2 watts actual; this country seems to specialise in low-power work.

Chile.—I am glad to say this country is well to the fore. Ch1EG (now temporarily closed) claims the world record for work with China on the 40-metre band, since signals must have gone "the other way round." 2LD has now been QSO all five continents, PI1HR representing Asia; two "five-watt" tubes (60 watts actual to plates). Some interesting work has been done with U.S.A. on receiving tubes U.V. 201a, about 2 watts actual, by 2RM and 2RE.

Ecuador. — There is, at any rate, one receiving station on short waves, at Santa Elena (QRA "c/o All America Cable Co.") since tests with the writer were made.

All above are "40-metre band," except 9TC, which is on 48 metres (but works little except Tuesdays and Fridays, 21.15 to 21.45 G.M.T., to RMA1, using call CLAA.)

Digitized by Google

Long-Distance Work.

By Hugh N. Ryan (5BV). **[R545·009·2**

READERS will remember my promise to give, or at any rate to attempt to give, in this month's article, a summary of the observations made by those experimenters who are keeping records of signal strengths and weather conditions, over long periods, with a view to establishing some sort of a relation between them.

I have found, from the correspondence which I have received on the subject, a much greater degree of interest in these investigations to exist than I had thought. Quite a number of amateurs are keeping more or less systematic observations, and though I fear that the observations made by some are too random to be of any great value, a certain number have obtained a great deal of data, and three men in particular (including Mr. Lewer, whose work is already known to readers) have tackled the job in a very complete and systematic manner.

Results.

The results obtained by various observers conflict greatly on some points, but agree remarkably well in other (in fact in most) respects. This month I will just give the main points in the observations which have been brought to my notice, but before doing so I should like to make a few remarks of my own, which are suggested by the lines upon which experimenters are working.

I have heard many people say that DX conditions cannot possibly be affected by the weather, since, to quote one of them, "the ether is not dependent on the air." Other people, on the other hand, will point out that it is a matter of common experience among DX workers that an appreciable alteration in general signal strength is usually accompanied by a change, of some sort, in the weather. The point often overlooked, I think, by partisans of both sides, is that to assume a *connection* between two things is not necessarily to assume that one is *directly dependent* on the other; they may both be dependent on a third variable influence. If, therefore, observation tells us that changes in long-distance signal strength do coincide with changes in certain aspects of weather conditions (which I think is so) and other considerations tell us that the one cannot be influenced by the other (of which I am less sure), then, having established the connection beyond dispute, we shall have to assume that they are both under the control of some third influence (perhaps in this case an astronomical one).

Another, and similar, point arises from this. Many observers find that good and bad conditions recur in regular cycles. Some find that small cycles (of perhaps a few days) are superimposed on larger cycles (of perhaps a few weeks). Now it happens that some observers find that the most pronounced cycle has a length of about four weeks. The cycle of the moon's phases is of a similar length. Several have not expressed their results by saying that conditions recur in a four-week cycle, but have just said that conditions are controlled by the moon. I am not denying the *possibility* of this theory turning out to be correct, but I am pointing out that there is very little justification for it at the present stage, and that its adoption by an observer is not compatible with the open mind which he requires. The only possible test of it is to continue observations for a long time, and observe whether the "signal" and "lunar" cycles remain always in the same phase relation to each other, or whether they gradually drop out of step, as some of the curves I have seen rather seem to be doing. I have seen none which extend over more than three or four lunar months. If the curves do stay in step, then the protagonists of the theory will have a strong case.

Digitized by Google

Weather Conditions.

Most observers appear to be recording only the weather conditions at their own stations. While one appreciates the difficulty of obtaining data, over long periods, of conditions at the "other end" and in the intervening space, it does not appear likely that completely satisfactory results will be obtained until the observed as well as the observing stations keep weather records, and records of the intervening conditions are obtained. The last-mentioned records are actually being obtained and used by at least two observers, and I believe a third is arranging for observations at one distant station, but many are neglecting these points, even to the extent of plotting strength of Australian signals against barometric pressure in, say, London. The surprising thing is that their curves are extraordinarily good!

Mr. Lewer is continuing the observations which he recorded in this paper two months ago, and as his further work will probably form the subject of another article from his own very able pen in the near future, I will not detail it here. I may say, however, that his recent work is checking up very well indeed with his previous theory; so much so that he is apparently assuming the mantle of a DX-prophet, and telling the "gang" when it is worth attempting DX work. The oracle (to mix the metaphor a little) has spoken with some success up to the present.

The other two experimenters whom I mentioned as having obtained some very complete data indeed are Mr. Erith, of Sutton, and Mr. Charman (6CJ) of Bedford. Each of these gentlemen has sufficient results to make a complete and very interesting article, and I have suggested this to them. I will not, therefore, give their data here (in any case I have not the space), but will give an outline of the chief results derived from it. Readers will be able to note on what points they check up, and where they disagree. I may say that they are not in touch with each other, so the results are entirely independent, and the observations of each have extended over a period of several months, so that the element of conincidence is largely eliminated.

Mr. Erith's results, boiled down, yield mainly the fact that conditions go in cycles of six days (these cycles being, of course, superimposed on the more familiar yearly cycle, if not on others). He has given me a graph showing the "goodness" of DX reception (drawn to scale), barometric height, and temperature. He has drawn an ordinate every six days, and certainly this ordinate coincides in nearly all cases with a peak in the reception curve, there being no intermediate peaks of any size. In the few cases where the reception peak does not appear, either the temperature curve is very much above or below the average, or the barometric curve shows pressure to be very unstable, and these phenomena also do not appear anywhere in the normal part of the reception curve. Altogether, there is sufficient evidence to show clearly that some sort of connection exists, though any theory formed from these results alone will have to be modified before it will entirely fit all existing facts. The "excess temperature" idea was suggested by Mr. Lewer, but I think that while Mr. Erith's curves tend to confirm it so far, Mr. Erith himself distrusts it, and is well on the way towards getting a theory into which temperature, as such, does not enter, since it is itself bound up with pressure variations.

Graphical Records.

Mr. Charman's observations are mainly incorporated in a set of graphs which he has given me. These are very complete indeed, and I hope he will publish them and their future extensions. They cover a period of four months, but I think they will have to be carried on a good deal longer before any definite theory can be formed from them. The results for the four months, however, are extremely interesting. They comprise the usual barometric curve, several curves for the strength of a number of individual Australian and New Zealand stations in regular operation, a curve representing the strength of North American signals in general, and a very neatly made "composite curve" of two New Zealand stations whose signals have always been found to be of similar strengths, but who are not both always in operation. His own main conclusion from these observations is that a low, steady barometer is favourable

Digitized by Google

for DX. He will forgive me if I suggest that he is prejudiced in favour of a low barometer as a "DX-bringer," perhaps from previous observations, and tends to read this result into his curves; the curves do not seem, to me at any rate, to justify this, though they do suggest it in places. His other point, however, that of the barometer being steady, seems to me to be the one definite fact which emerges both from his curves and from all others. While they disagree on some points, every one of them shows that when the barometer is jumping up and down, then signal strength becomes very erratic or falls off altogether. This alone is sufficient justification for continuing observations on these lines, and perhaps curves covering longer periods will yield more consistent results on other points.

2BOW (Cheshire) sends me a graph, extending over some four months, having one curve showing strengths of North American signals, and another of signals from South of the Equator (South Americans, A's and Z's). These are plotted to a time base, on which the phases of the moon are noted, the deduction suggested being evidently that the two are related. I have already mentioned the "moon" theory near the beginning of this article, so I will only mention here what is to be seen from this graph. North American signals do undoubtedly recur in it almost exactly in step with the moon's phases, best reception occurring at full moon and worst at new moon. Signals from South America and the Antipodes do not follow the moon's phases quite so well (as, I must admit, one would expect if the lunar influence theory is correct). There are quite definite peaks in the reception curve about each last quarter, but otherwise there is little relation.

General Reports.

I have no other reports of systematic work over long periods, but a few other well-known operators have made more than casual observations, and formed opinions in their own minds. I will quote a few of these, and would point out that though they are not to be looked upon as systematic research they all come from well-known experimenters, who do not form opinions at random, and who spend so much time in successful DX work that their observations are likely to be reliable.

5QV says he has noticed that a bright moon and a clear sky usually means a good DX night. This checks up with 2BOW's lunar observations as far as U.S.A. signals are concerned. The "clear sky" part may alternatively be expressed as "absence of cloud," and thus agrees with a number of letters I have received, whose writers give as their chief observation that the appearance of heavy clouds will spoil conditions on a promising night. This is, of course, mainly a local effect and is rather to be expected. 5QV also finds that a high, steady barometer is favourable. (Compare this with Mr. Charman's "low, steady barometer," and note that while they disagree absolutely on the question of low or high, which I mentioned as the weak point in Mr. Charman's interpretation of his own curves, they agree that steadiness of pressure is favourable, which seemed to me to be the chief observation to be made from the curves).

It will be remembered that, according to Mr. Lewer, good or bad conditions affect all wave-lengths simultaneously. This is very important if it is true, as it would mean abandoning the idea of trying to change wave-length from time to time, to "get round" bad periods. It is, therefore, interesting to note what other observers find. Messrs. Studley, of Harrow, who are very consistent DX listeners, consider that wet weather favours 90-metre work, dry cold weather favours 45-metre work, and weather has no effect on 20 metres. My own recent observations, such as they are, tend to confirm this.

It will be noticed that I have neglected two important effects, atmospherics and "sunset and sunrise bands." The first is omitted because I have as yet very little data on it. Such as I have seems to have no bearing on any other effect, and the several sources of data conflict greatly with each other. I hope to deal with it in the future. The question of sunset and sunrise I have neglected because nothing new has arisen beyond what is already well known. Briefly, as sunset or sunrise passes over the transmitting or receiving station a disturbance of signal strength takes place, usually taking

Digitized by Google

the form of a considerable increase preceded and followed by a reduction below normal. In cases where sunrise passes one station at the same time as sunset passes the other, very "freak" results are to be expected, and do occur. An example of this is the recent very fine reception of Japanese 1PP's speech and music all over Britain.

I have received many other reports on these investigations, but they have either just confirmed points in those I have mentioned, or else covered such short periods or been so random as not to be of very great value by themselves. I hope those concerned will therefore forgive me for not including them in an article which has already become too long.

"DX" Reports.

The weather "effect" part of the article having taken up so much space this month, I fear the DX report will have to be very short. I will include, therefore, the more important stations only, again with apologies to those omitted.

2SZ has now a crystal-controlled transmitter in operation on 45 metres. This is believed to be the first successful crystal-controlled set in Europe. and is giving very fine results. It has been used for work with all parts of the world, and all stations report it as giving an exceptionally good signal, with a perfect note. A Canadian "Five" says it is the first British signal ever heard in his part of the country.

5QV has reached the end of his three-month schedule with C4GT, with the object of establishing touch with the Canadian fourth district. Unfortunately they had no luck whatever, the nearest they ever got to success being one morning when G2SZ heard C4GT calling 5ZV and took a message for him, though he could not raise the Canadian. This is interesting as 4GT is a good station who can work New Zealand any morning.

6LJ has worked 8QQ (Indo-China) and been heard near Calcutta.

2GO has been heard in India, with 12 watts input.

6QB has at last got his little generator going, and is reported as QSA all over Europe, but still cannot reach America with his small power. No doubt he soon will.

6VP has now changed his note to pure D.C., and though rather weaker, his signals are reaching further. He gets about 1 000 miles with 10 watts.

2BOW reports reception of two American Canal Zone stations, and of Australian 3KB, who was only using 30 watts and had been in operation less than a week.

2MA and his near neighbour 2OF are both doing excellent European work on low power, the former using a Hertz aerial.

6CI, of Coventry, has been in reliable contact over 80 miles in daylight, using 45 volts on a receiving valve.

A new station, 5WV, has started up in Essex with 6 watts, and has already covered most of Europe.

5OC (South Wales) is now on 45 metres, and worked an Australian the first night he used that wave-length.

5NJ (Ulster) now only works at week-ends, but has worked South Africa and South America, and is still in frequent contact with Australia and New Zealand.

Messrs. O'Dwyer, of Dublin, send me a very good log or reception from most parts of the world, including Japan and Hawaii.

An interesting report of low-power work comes from Australian 5BG, who has worked seven U.S.A. stations, with his inputs varying from 5½ to 7½ watts, on 35 metres.

Spain is now QSO New Zealand, EAR1 and EAR21 having worked Z2AC.

Three of the leading Belgians, P2, B7 and S2, have been out of action with blown tubes or condensers. B4YZ and B4RS are in regular touch with America. While BS4 was transmitting recently, the River Sambre suddenly rose in flood, and S4 was nearly drowned in his station. He says he thought of calling SOS, which would, I think, have been a unique event in amateur history!

Digitized by Google

Patent Infringement and Experimental Use.

By a Patent Agent. [R347

LETTERS Patent for invention confer upon the patentee, *i.e.*, the owner whose name is for the time being entered on the Register of Patents, the sole and exclusive right to make, use and sell under the patent. The patentee may share this monopoly with others in many ways. For example, he may grant licences to others to make, use or sell or to do all these things. Again he may merely manufacture and sell and a straightforward sale without restrictions is an implied licence to use. The manufacture, sale and use of a patented article, or process without the patentee's permission, however, constitutes infringement and is actionable at law. Manufacture of a single article for personal use undoubtedly constitutes infringement just as much as does manufacture in quantities for sale. It is a mistake therefore for manufacturers to imagine, as is too frequently the case, that if they buy a patented machine they are entitled to build and use replicas in their own factory. In a successful action for infringement the court grants the patentee an injunction to restrain the infringers from committing further infringement together, in the absence of peculiar circumstances, with damages. These damages are based not so much on the profit which the infringers have made but the damage which their action has done to the patentee.

To the foregoing there is, however, one notable exception. Use by way of bona fide experiment is no infringement. To quote Frost: "It is no actionable invasion of a patentee's rights for another person to use the invention, and thereby produce the finished product by way of bona fide experiment or amusement, without the intention of selling or making use of the thing so made for the purpose for which the patent was granted, but with the view merely of improving upon the invention the subject of the patent, or with the view of seeing whether an improvement can be made." The term "amusement" needs some qualification. One might build a wireless set for the enjoyment of building it, but assuming the set to be in accordance with an existing patent then the use of the set when once built for receiving broadcast programmes would unquestionably constitute infringement. The reasoning is simple. In building the set no damage or injury was done to the patentee and the set, being built merely for the fun of building it, there was no intention of selling the set and therefore no intent to evade the patent. If the set is used however, probably for amusement, the patentee's interests are injured. That is to say he has the sole right to supply sets in accordance with his patent and would presumably have made a profit on the sale. To build a set in accordance with a patent and satisfy oneself that it works does not constitute infringement, but it is the use after this satisfaction has been obtained that is an infringing action. If after the set has been made one experiments with it for the purpose of trying to improve upon it then again there is no infringement. The experiments may conceivably be quite exhaustive and extend over an appreciable period and the behaviour of different apparatus may be tested in conjunction with the set provided that the experimental work has a direct bearing upon the set itself. To build a set in accordance with a patent, however, and then use the set for testing the qualities or properties of apparatus without relation to the set cannot be regarded as experimental use under this heading. As an example, the properties of loud-speakers might be tested with a set built in accordance with an existing patent. Assuming these tests could be carried out with practically any other type of set then obviously there is no experimental use in so far as the set is concerned and the use of the set for this purpose must be regarded as infringement.

Experimental use is a term which in common with many others is inclined to have somewhat different meanings applied and a case, decided in 1885, is worthy of note. An English electrician purchased and imported certain articles made abroad in accordance with a British patent. In an action

Digitized by Google

for infringement brought by the patentees the electrician defended his action on the grounds that the articles were bought for the purpose of experiment and examination by himself and his pupils. The articles were never sold or used for any other purpose, and it was submitted that the articles produced in this country under the patent were too costly to be used for taking to pieces. The Court, however, held that the use complained of was infringement, and an injunction was granted restraining the continuance of it.

In another case, decided in 1889, a number of infringing machines were purchased on the understanding that if they were unsatisfactory or unsuccessful they were not to be paid for. These machines were installed by the purchasers in their factory and were used for a few months after which use was discontinued. In a subsequent action for infringement the Vice-Chancellor of the Court of the County Palatine of Lancaster held that such use was not experimental and granted an injunction. The case was taken to appeal when the injunction was dissolved, the ground being that even though infringement were proved the defenders were not manufacturers but only users, and the use complained of had not only been discontinued an appreciable time, but further, there was no evidence of further use or intention to continue in the act complained of.

Concerning the question of manufacture without sale, it is to be noted that this may constitute infringement. Two precedents are of interest. Firstly, if a retailer exposes for sale certain infringing articles but effects no sale, then there is no infringement. If the retailer was unaware at the time of purchasing the articles that they were infringing articles he would under no circumstances be liable provided no sale was effected, although innocence after sale is no excuse. To be a party to the manufacture, however, renders one liable, and in a case tried in 1860 infringement was held to have been committed when a defendant had manufactured articles and his traveller had offered them for sale, although none had been actually sold. A decision of the House of Lords in 1900 should, however, be considered in connection with this latter case.

Concluding, it must of course be recognised that each case is one of fact and must be treated on its merits, but in the words of Jessel M.R., "patent rights were never granted to prevent persons of ingenuity exercising their talents in a fair way. But, if there be neither using nor vending of the invention for profit, the mere making for the purpose of experiment, and not for a fraudulent purpose, ought not to be considered within the meaning of the prohibition, and, if it were, it is certainly not the subject for an injunction."

[NOTE.—The Editors do not hold themselves responsible for the views expressed above.]

The Past, Present and Future Developments of Wireless Telephony. [R550

A Lecture by CAPT. P. P. ECKERSLEY, at an Ordinary Meeting of the I.E.E., on 7th January, 1926.

THE lecture was on more or less popular lines, and was delivered in the brisk and fluent manner which broadcast listeners have come to associate with the B.B.C.'s Chief Engineer.

Capt. Eckersley first reviewed the general principles and methods of wireless communication, and of the transmission and propagation of waves, including the effects of the Heaviside layer. He then discussed methods of modulation, illustrating the well-known choke control system, as well as absorption modulation and grid modulation. Next he reviewed the work and technical policy of the B.B.C., expressing himself as an unrepentant believer in the principle of providing transmissions capable of crystal reception by a maximum of the population. Dealing with the High Power Station, indeed, he suggested 100 per cent. as the desirable goal.

The lecturer then turned to the matter of international interference, pointing out the possibility of mutual heterodyning even

Digitized by Google

though the modulation of the interfering station was not received. The allocation of wave-lengths and power was then discussed on an international, or at least Western European, basis. The matter of 200-600 metres on an "exclusive" and "non-exclusive" division was dealt with, and experiments were described with Bournemouth and London working on precisely the same wave-length. The Piezo-electric crystal oscillator was suggested as a drive control for the great accuracy required if two—even low-powered—stations were working on the same wave-length.

Lastly, the lecturer discussed the matter of quality in both transmitter and receiver, dealing with the microphone, the loud speaker and coupling transformers. The latter point was illustrated by slides of curves showing the flat output of the transformers used by the B.B.C.

A discussion followed, opened by Prof. C. L. Fortescue, and the lecturer was cordially thanked.

I.E.E. Wireless Section.

An Announcement. [R060

THE Committee of the Wireless Section of the Institution of Electrical Engineers has further carefully considered the proposal for a New Institute of Wireless Engineers and is definitely of the opinion that the interests of qualified professional wireless engineers are best served by the Institution of Electrical Engineers. The Wireless Section of the Institution has already deprecated the formation of a new Institute of Wireless Engineers, and feels confident that it is unnecessary, and will not be supported by representative and qualified professional wireless engineers.

The Institution of Electrical Engineers has already explained that an engineer with adequate wireless qualifications can become a Corporate Member of the Institution, and that other wireless engineers not reaching that standard are eligible as Graduates and as such can attend all meetings of the Wireless Section as well as those of the Institution.

The Committee has taken into consideration the suggestions arising out of the previous correspondence on this subject which appeared in the Press, and with a view to improving and extending the activities of the Wireless Section, and making it more definitely representative of professional wireless engineers, the Committee submitted the following recommendations which have been approved by the Council of the Institution :—

(1) While it is essential that the standard of qualifications for membership of the Institution should be maintained, more opportunity is to be afforded to the physicist engaged in wireless work to become a member of the Institution.

Applications for membership of the Institution based upon the usual general scientific training and wireless professional qualifications to be referred by the Secretary to a Wireless Section Membership Sub-Committee which will make reports and recommendations for the guidance of the Membership Committee of the Council.

(2) The qualifications for membership of the Wireless Section to remain as at present, viz. : "That he is a member of the Institution and is actively engaged in the study, design, manufacture, or operation of Wireless or High Frequency Engineering Apparatus," and the Wireless Section Membership Sub-Committee to scrutinise all new applications for membership of the Wireless Section and decide who shall be admitted to it.

The Sub-Committee to be authorised to call for full particulars as to the nature of the study undertaken by an applicant or for particulars of his work in design, manufacture, or operation in order to satisfy themselves that the applicant is properly qualified in wireless engineering.

(3) The fact to be emphasised and more widely published that the meetings of the Wireless Section are open to all members of the Institution.

(4) The Wireless Section Committee to get into direct touch with the Local Centre Committees for the purpose of ascertaining the possibility of :—

(*a*) Starting Local Wireless Sections.

(*b*) Stimulating efforts to produce local Wireless papers.

(*c*) Suggesting the reading of available suitable papers, or giving of lectures at Local Centres.

(5) Each Local Wireless Section, when properly constituted, to be entitled to elect or nominate one Wireless member to the Wireless Section Committee. For this purpose, a Local Wireless Section shall consist of at least 15 members, who must already be members of the main Wireless Section.

(6) The papers and the discussions of the Wireless Section and other Wireless papers, in addition to appearing in the Journal of the Institution, to be issued separately in the form of "Proceedings of the Wireless Section."

(7) The Chairman of the Wireless Committee to be an ex-officio member of Council, in the same way as are the Chairman of Local Centres, as soon as the necessary alterations to the Bye-Laws can be made, but in the meantime he will be invited to attend all meetings of the Council.

Digitized by Google

Radio Society of Great Britain.

A Review of Last Year's Activities. [R060

A HIGHLY satisfactory report of the work carried out in 1925 was read at the Annual General Meeting of the Radio Society of Great Britain, held at the Institution of Electrical Engineers on Wednesday, 16th December, under the Chairmanship of Brig.-Gen. Sir Capel Holden, K.C.B., F.R.S.

This review of the work of the Society constituted the Annual Report of the Council for the year ended 30th September, 1925.

Early in 1925 (said the Report) the Society was called upon to render valuable service in connection with the "Wireless Telegraphy and Signalling Bill, 1925," which then came before Parliament. The Society prepared a memorandum upon the clauses of the Bill incorporating proposed amendments and additions which the Council considered would be in the interests of the membership. The ultimate withdrawal of the Bill was, it is considered, largely due to the Society's efforts.

Ample evidence has been forthcoming from all parts of the country showing that the Society continues to be recognised as the most important national organisation in the amateur movement. It is also interesting to note that Societies in Africa, Belgium, France, India and Malta are now affiliated with the parent Society.

In December, 1924, arrangements were completed whereby EXPERIMENTAL WIRELESS became the official organ of the Society.

The fact that a standard specification of ebonite is now available is consequent upon the efforts of the Society in co-operation with the British Engineering Standards Association. This important achievement is being followed up by proposals for the standardisation of wireless components and apparatus.

The decision to adopt a distinctive emblem had been put into effect, and badges are now available to members.

With the formation of the International Amateur Radio Union the Society received further distinction, three of its members being appointed officers of the Union. In connection with the formation of the British Section of the Union, the Society had the honour, in April last, of entertaining Mr. Hiram P. Maxim, President of the American Radio Relay League, and several American colleagues.

The social side of the Society's activities was not neglected, and both an Annual Dinner in London and an Annual Excursion were organised. The latter took the form of a visit to the Marconi Wireless Transmitting Centre at Ongar, Essex.

The formation of a Technical Advisory Committee was also recorded in the Report. The assistance of this Committee is now available to all members desirous of help.

During the session six important lectures were delivered, the speakers being Sir Oliver Lodge, D.Sc., F.R.S., Prof. C. L. Fortescue, Mr. P. K. Turner, Mr. G. G. Blake, M.I.E.E., and Mr. F. M. Colebrook, B.Sc. In addition a number of profitable informal meetings were held.

A certain amount of difficulty was experienced in securing a sufficient number of lecturers to visit the affiliated societies, despite the fact that nearly fifty gentlemen volunteered their services. It was hoped that during the current year more members would be able to undertake this duty occasionally. In the meantime the Society thanked all those gentlemen who had so generously given their assistance.

The advantages accruing from the consolidated opinion of all the affiliated societies was shown at the meetings of the General Committee of the affiliated societies. As a testimony to the value of the considered opinion of the Society it is interesting to note that when the Imperial Communications Committee proposed the drafting of technical wireless regulations the Society was invited to send a representative.

Thanks to the courtesy of the B.B.C., fortnightly talks on behalf of the Society were given regularly from the London Broadcasting Station.

It was reported that a scheme for the registration and certification of wireless dealers was now under consideration, but that the Society recognised the inherent difficulties in working such a scheme and very careful investigations were being made.

Membership in all branches showed a decided growth during the year, notably in the Transmitter and Relay Section.

The extension of the "T. and R. Section" was remarkable. There were now members in Africa, Spain, France, Italy, America, Canada, and India, with the result that much useful co-operation had been possible in the direction of experimental tests. Informal meetings held at regular intervals proved a steady attraction, and while the lectures were mainly devoted to transmission questions, the receiving side had not been entirely neglected.

In July the important decision was made to issue a monthly publication known as *The T. and R. Bulletin* devoted entirely to the interests of transmitting amateurs. This publication, which is circulated only among members of the Section, had been well received, and was responsible for a large influx of members.

The Society's report concluded with a reference to the Schools Radio Section, which had also shown good work in the past year, notably in the organisation of a Schools Radio Exhibition in the summer, and in collaborating with the Education Department of the British Broadcasting Company.

The Treasurer's Report, which was also read at the meeting, showed a satisfactory state of affairs.

Among the interesting points raised was the expenditure on postage, which revealed an increase of £23 4s. 0½d. over the previous year. This clearly demonstrated that the Society's correspondence had expanded considerably.

The accounts showed that a satisfactory balance was carried forward.

Digitized by Google

Correspondence.

Letters of interest to experimenters are always welcome. In publishing such communications the Editors do not necessarily endorse any technical or general statements which they may contain.

Howling in Short-Wave Receivers.

The Editor, E.W. & W.E.

SIR,—I notice that one of your recent contributors has experienced the difficulty, when working on waves below about 50 metres, of the set howling when tuning down to the silent point just prior to the cessation of oscillation. He suggests connecting the grid-leak to L.T. I find that apparently this can be cured completely by shorting the L.F. transformer secondary by a grid-leak (the higher the effective resistance the better). It would therefore appear that this is a trouble caused by some sort of interference by the oscillating detector valve with the low frequency circuit.

C. R. BETTS.

Sandy Knoll,
Radlett, Herts.

The Beverage Aerial.

The Editor, E.W. & W.E.

SIR,—I am sure I am not the only wireless amateur to regret the lack of real, useful information on the Beverage aerial. What I have been able to gather is the following :—

The Beverage aerial, the invention of Mr. H. H. Beverage, of U.S.A., is a curious form of aerial, remarkable for the fact that its length is about equal to the wave-length of the signals to be received, that its height is about 6 ft., that it was used by Mr. Paul F. Godley, also of U.S.A., a few years ago, in the then remarkable feat of receiving 1kW. transatlantic signals with a supersonic receiver, using only ten " toobs." The directional effect of the Beverage aerial is stated to be very great. It is earthed at the far end, through a resistance, to get uni-directional reception. (It also appears that the Beverage aerial is unsuitable for erection in the average suburban garden !)

To save the operator the trouble of a two-λ walk, a method has lately been devised whereby the earthing resistance is moved to the receiving end of the aerial.

This information (*sic*), appropriately rearranged and polished, has from time to time adorned the pages of the " popular " periodicals. Seeing that many patent specifications are given in every number of your excellent magazine, would it not be possible to include those relating to the Beverage aerial in an early issue, giving circuits and data ?

May I say at the same time how heartily I agree with Mr. Anson in his recent remarks regarding the " R.I." amplification curves. My opinion is that the firm in question ought to leave that kind of thing to firms who have not such a good reputation to take care of. In its capacity as the leading English wireless publication, E.W. & W.E. ought to impress upon the wireless fraternity the necessity of giving amplification curves with a logarithmic frequency scale. The experiment of superimposing a piano keyboard on the frequency scale of the average transformer curve might set some people thinking. It cannot be done ! The frequencies ought to read : 16, 32, 64, 128, 256, 512, 1 024, 2 048, 4 096, 8 192, and not : 0, 500, 1 000, 1 500, 2 000, 2 500, 3 000, etc. " Truth in Advertising," please.

KAYE E. WEEDON.

21, Parkveien,
Oslo, Norway.

Screening of Small Variable Air Condensers.

The Editor, E.W. & W.E.

SIR,—With reference to the letter of Mr. R. Kay Gresswell, F.R.A.S., in the January issue of your journal, I should like to discuss briefly one or two of the interesting comments expressed.

The object of the article was to show that for *quantitative* work a screened condenser only has a strictly definite capacity between terminals, independent of the absolute potentials of the plates, when one set is connected to the screen. Thus the cases for the screen being—

(1) Separately earthed ;
(2) Left quite free and insulated ;

were dealt with in the last section (p. 971) and the first section (p. 972), but purely from the point of view of definiteness of capacity.

I quite agree with Mr. Gresswell for the circuit cited, for in the sketch one set of plates is earthed, and then to earth the screen is equivalent to connecting the screen to one set and earthing the combination.

In this condition, the capacity is independent of applied voltage and " hand effect " (as far as the terminal and leads from the insulated system will allow).

When, however, both plate systems are at potentials different from that of earth, and the screen is separately earthed, the effective capacity between terminals at a given setting is by no means necessarily constant, and although unsuitable for quantitative work, is probably quite satisfactory for ordinary tuning purposes.

D. A. OLIVER.

4, St. Dunstans Gardens, 5th January, 1926.
Acton, W.3.

Digitized by Google

Patents.

The Editor, E.W. & W.E.

SIR,—With reference to your editorial on patents, appearing on page 935 of your issue of December, 1925, the answer to the question contained in the last three lines of this paragraph is a most emphatic "No," as such an amateur would infringe our patents and we have not presented amateurs with a "free gift" up to the present.

As I think we have made clear in advertisements and otherwise, we are willing to issue a licence to all and sundry under the Supersonic Patent on receipt of the standard royalty of 30s.

H. A. DISNEY, Secretary,
Standard Telephones & Cables, Ltd.

63, Aldwich,
London, W.C.2.

4th January, 1926.

The Editor, E.W. & W.E.

SIR,—With regard to the letter by Mr. Disney —in November—and your Editorial in December:—

Firstly, a patent does not, so far as my knowledge goes, affect *use* (*vide* your Editorial) but only manufacture, and I do not think the view you take is a correct interpretation of the existing enactments.

"The principle of our patent law is that nobody is given an exclusive right to an idea but only the exclusive right to *exploit* an idea for profit and an idea is only patented as part of the machinery for accomplishing that end.

"Mere making of any object which comprises ideas covered by patents does not, therefore, constitute an infringement of the patent as long as such making is not used as a source of gain or profit."

This was my impression—and I had intended to write you in time for the December issue. However, I submitted it to legal opinion as a matter of precaution, and I have given you his own words —my only excuse for adding to the volume of letters on the subject.

Dover. C. E. B. WILKINS, B.A.(Cantab.).

Esperanto.

The Editor, E.W. & W.E.

SIR,—With reference to your note in your editorial of current issue of your journal with regard to the continuation of your Esperanto section, as a reader of your excellent journal since its first number, I would be very sorry to see you drop this section, as I am sure that you fully realise the importance of the language to Radio use, and especially in its capacity as a means of communication between the radio amateurs of different nationalities, for whom you cater so efficiently.

F. R. A. MCCORMICK.

5, Mount Eden Road,
Donnybrook, Dublin.

2nd January, 1926.

Selective Amplifiers.

The Editor, E.W. & W.E.

SIR,—I read with great interest Mr. Turner's article on Selectivity, but I should like to point out a small error, which, luckily, does not affect the value of the numerical results.

In Appendix I. he takes $\psi = \frac{R}{\omega L}$, $m = \frac{a}{\omega L}$.

Substituting these values in equation (11), we do not get equation (12). I deemed this to be a misprint at first, but noted afterwards that he says that although ψ, R both vary, ψ is the more nearly constant.

It would appear better, therefore, to take as constant ψ and L, when we have

$$\psi = \frac{R}{\omega L},\ m = \frac{R_a}{\omega_0 L},\ \frac{R_a}{\omega L} = \frac{m}{p}.$$

In this case we get for equation (11)—

$$\frac{1}{\eta^2} = \left(\frac{R_a}{R_e} + 1\right)^2 + \frac{2m\psi}{p}\left(\frac{R_a}{R_e} + 1\right) + \frac{m^2\psi^2}{p^2} + \frac{m^2}{p^2}(1-p^2)^2$$

$$= \left(\frac{R_a}{R_e} + 1 + \frac{m\psi}{p}\right)^2 + m^2\left(\frac{1}{p} - p\right)^2.$$

This is without approximating by neglecting the effect of p in the first part. Now, so long as ψ is small, the first part is small compared with the second, and the numerical results given by the two equations for η will be sensibly equal. Only if ψ is increased greatly does the effect of the p in the first part (A) become sensible.

T. IREDALE WILLIAMS.

Collinson House,
Mill Hill, N.W.7.

12th December, 1925.

The Editor, E.W. & W.E.

SIR,—I have read with interest the criticism of Mr. Williams in connection with my article on selective amplifiers.

The discrepancy which he mentions in his second paragraph is due to the fact that in Appendix I of the original article there was a misprint. In the line which reads:—

"And lastly, let $\frac{R}{\omega L} = \psi$ and $\frac{R_a}{\omega L} = m$,

ω_0 should be substituted for ω in the denominators in both cases.

Having made this correction, Mr. Williams will find that the form of equation 12 as given by me is correct.

It is obviously desirable to express the two ratios ψ and m in terms of ω_0 rather than ω, for the former is a constant (*i.e.*, the frequency of resonance), whereas the latter is not.

P. K. TURNER.

13, Norland Square,
London, W.11.

7th January, 1926.

"Wipe Out."

The Editor, E.W. & W.E.

SIR,—Replying to the letters which have appeared with reference to the oscillator phenomenon which I have previously described, it does not seem to me that either explanation covers my observations. In order to avoid possibility of error I have repeated the experiment, taking special care to observe the effect from *both* sides of the resonant frequency, and the results confirm the previous observations in every respect but one, namely, that there is a

Digitized by Google

sharp drop in voltage *just before* synchronisation. In every case, however, the curve of recorded voltage is symmetrical, and returns to zero (unlike that shown by Mr. de Burgh).

The explanation given by Mr. de Burgh describes the sequence of events which I would have expected, and it was the different result which occasioned surprise.

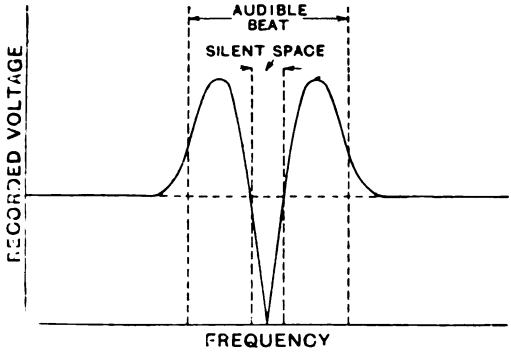

The silent space is greatly exaggerated on the diagram, as with the sets of oscillations being of equal strength it is reduced to an extremely minute band of frequency.

It will be noticed that the curve shown is similar to those obtained from quartz resonators across a tuned circuit. From what little I know of the properties of these crystals it seems to me that the action is analogous in some respects.

Referring to Mr. Browning's remarks, am I to gather that the inductance of the oscillator is affected by the distant signals (from 2LO)? It does not seem that this could be possible, as the voltage set up in the oscillator coils would be very much less than that in the receiver, which is connected to an aerial, and this again would be much less than that generated in the oscillator coils by its own action. The only appreciable effect on the oscillator from the distant transmitter would be through the medium of the receiver.

In fact, it is the interaction of *three* circuits which makes the matter so complex, as the effect of one train of oscillations on the other through the medium of the receiver circuit would appear to play an important part in the action of the experiment.

MARCUS G. SCROGGIE, B.Sc.

Lee, S.E.12.

Alignment Principle.

The Editor, E.W. & W.E.

SIR,—Mr. Barclay's article on the Alignment Principle is a most useful contribution in December number showing how Projective Geometry can be utilised.

The formula at top of column 2, p. 940, and in appendix, p. 942, should be corrected by substituting the following expression for the "I" (last term):—

$$\frac{\lambda_1^2 - \lambda_2^2}{\lambda_3^2 - \lambda^2} \cdot \frac{\lambda_1^2}{\lambda_2^2}$$

J. HART.

Harrow.

The Editor, E.W. & W.E.

SIR,—I cannot understand the significance of your correspondent, Mr. Hart's, "correction" to my formula, and for his satisfaction as well as for my own, I herewith append a simple proof of it:—

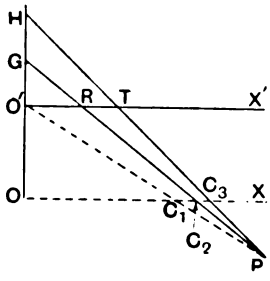

Our object is to find the points C_1 C_2 C_3 on OX such that

$$\frac{C_2C_3}{C_1C_2} = \frac{r_3 - r_2}{r_2 - r_1} \text{ and } \frac{HG}{GO^1} = \frac{\lambda_3^2 - \lambda_2^2}{\lambda_2^2 - \lambda_1^2}$$

Change now the origin to the point O^1, and let O^1X^1 be the new axis of X.

Then, y-co-ordinate of G is $\lambda_2^2 - \lambda_1^2 = a$ (say)
y-co-ordinate of H is $\lambda_3^2 - \lambda_1^2 = b$ (say).

Let PC_2, PC_3 meet O^1X^1 in R and T respectively.

Then, x-co-ordinate of R is $k(r_2 - r_1) = kc$ (say)
x-co-ordinate of T is $k(r_3 - r_1) = kd$ (say)

where k is a constant.

For the lines GR and HT we have then the equations,

$$\frac{x}{kc} + \frac{y}{a} = 1 \text{ and } \frac{x}{kd} + \frac{y}{b} = 1$$

in which, putting $y = -\lambda_1^2$, we obtain for the x-co-ordinates of C_2 and C_3,

$$OC_2 = kc\left(1 + \frac{\lambda_1^2}{a}\right) = \frac{kc\lambda_2^2}{a}$$

$$OC_3 = kd\left(1 + \frac{\lambda_1^2}{b}\right) = \frac{kd\lambda_3^2}{b}$$

Whence,

$$\frac{C_2C_3}{OC_2} = \frac{\lambda_3^2 ad}{\lambda_2^2 bc} - 1 = \frac{(r_3 - r_1)}{(r_2 - r_1)} \cdot \frac{(\lambda_2^2 - \lambda_1^2)}{(\lambda_3^2 - \lambda_1^2)} \cdot \frac{\lambda_3^2}{\lambda_2^2} - 1$$

W. A. BARCLAY.

Murtle,
Aberdeenshire.

Readers' Views.

The Editor, E.W. & W.E.

SIR,—You invite expressions of opinion from your readers as to the contents of your magazine.

Might I suggest that the best policy would be to let the contents correspond as far as possible with the title? That is to say, I think the contents should be about experimental work in wireless telegraphy and should not deal with index-making or Esperanto, useful and interesting though these subjects may be.

I should also like to enter a plea for the reader whose mathematics have not gone beyond the point of (say) the matriculation examinations at Universities. Not that I would desire to eliminate

Digitized by Google

the more highly specialised articles. Far from it. I think they seem to be very useful, though I comprehend them only in places. But surely there is room in the field of experiment for the, relatively, non-mathematical amateur. Further information as to how such an one might help to augment the general fund of knowledge would be very useful, and if the pith of the mathematical articles could be given for his benefit, I think it would be well. I am sure that this is already done to a considerable extent, but I think it might be done a little more fully.

Another point. Could not more references be given to authoritative text-books so that the relatively unmathematical reader might be put in the way of brushing up his mathematics and so, perhaps, eventually, be better able to appreciate the more highly technical articles?

Experiment and education in experiment. These should, I think, be your watchwords.

E. C. R.

West Byfleet.

Transformer Curves.

[Under correspondence in the issue of E.W. & W.E. for January, 1926, two letters were included over the initials A.B. and C.D. respectively. We have been asked to make it clear that these initials were put in substitution for the names of two firms commercially interested in the manufacture and sale of L.F. transformers.—EDITORS.]

The Editor E.W. & W.E.

SIR,—I have followed the Transformer Curve discussion with great interest. To my mind the correspondence columns are one of the most interesting features of your paper. Also I should like to congratulate you on the policy upon which you run these columns as expressed in the December editorial. May I contribute something to the discussion?

There is one fact that Mr. Appleton's critics seem to have ignored: the response of iron to a magnetic field is partly mechanical. There is an expansion of the iron, for instance.* Now in any operation into which mechanical friction enters there is a limiting value for the applied force below which there is no response at all. I don't think that there can be much doubt that the "Appleton effect" does exist, though I am rather sceptical about its importance under normal conditions. I should like to see the figures obtained in the experiments upon which Mr. Appleton's theory is based.

D. F. VINCENT.

Reading. 14th January, 1926.

The Editor, E.W. & W.E.

SIR,—I am not surprised that Mr. Appleton should devote more attention to my introductory anecdote than to the body of my letter, because he had once before proved his reluctance to facing the facts. But I am surprised that he should throw suspicion on my motives.

In these circumstances I am compelled to state that I am not connected, either directly or indirectly, with the radio industry—except as a purchaser of transformers and accessories, for my own use.

Further, like many other independent experimenters, I am constrained to inform the "powers that be" that there are limits to which the licence we readers allow advertisers can be stretched. I would sooner deny myself the undoubted benefits that I derive from subscribing to technical publications than submit uncomplainingly to an advertising campaign that gratuitously insults my intelligence each issue.

WILLIAM D. OWEN, A.M.I.E.E.

Palmer's Green, N.13.

---

* [Mechanical friction of a molecular character —and it is molecular friction which is involved here—enters into the deflection of a spring, but we have always understood that the deflection was proportional to the force, however small.—G.W.O.H.]

Digitized by Google

From the World's Wireless Journals.

Abstracts of Technical Articles.

R000.—GENERAL PRINCIPLES AND THEORY.

R060.—I.E.E. WIRELESS SECTION—CHAIRMAN'S ADDRESS.—Maj. B. Binyon, O.B.E. (*Journ. Inst. E.E.*, Dec., 1925).

Address delivered 4th November, 1925, an account having appeared in E.W. & W.E. of December, 1925. The address dealt chiefly with marine wireless, under the sectional headings: Spark Sets, Spark Gaps and Systems of Transmission, Emergency Sets, Lifeboat Installations, Ships' Aerials, Automatic Call Devices, Direction Finding, Demonstrations of an Automatic Call Device and of an Automatic Direction Finding System were given.

R111.—ETHER DRIFT.—G. W. de Tunzelman (*Electrician*, 18th Dec., 1925).

An article discussing the recent change of front on the question of the relative motion of earth and ether. Observations made by Dr. D. C. Miller at Mount Wilson Observatory, California, 6 000 feet above sea level, indicate that at this altitude the earth and the adjacent ether do not move together. By comparison with previous observations made by Miller and Morley at Cleveland, Ohio, at only slightly above sea level, this suggests a partial drag of the ether by the earth, which decreases with altitude, or in other words, with greater altitude the earth loses its grip on the ether. This article reviews classical work on the subject from the original interference experiments of Michelson up to the 1904-5 work at Cleveland, Ohio. The recent work of Miller at Mount Wilson from 1921-25 is described with some curves of results. Further work is in progress.

A short note on the same subject in the Journal of the Franklin Institute, November, 1925, quotes views of Lorentz, Einstein and Eddington on Miller's results, in so far as they are completed. The subject is of considerable importance in connection with the theory of relativity.

R113.—NOTES ON THE CONDITIONS GOVERNING TRANSATLANTIC RECEPTION.—S. K. Lewer (E.W. & W.E., Dec., 1925).

R113.6.—ON SOME DIRECT EVIDENCE FOR DOWNWARD ATMOSPHERIC REFLECTION OF ELECTRIC RAYS.—Prof. E. V. Appleton and M. A. F. Barnett (*Proc. Roy. Soc.*, A. 109, 1925).

A paper dealing both theoretically and experimentally with the effect of the upper ionised layer.

Experiments are described indicating that for short-distance transmission (*e.g.*, 100 miles) of waves of broadcasting length, the fading of signals is due to interference between two sets of waves, one the direct ray from the transmitter, and the other a ray deviated by the ionised layer. According to the instantaneous phase between these they may mutually assist or oppose. A method of estimating the height of the layer is shown, the preliminary experiments indicating a height of about 90 km. Subsequent experiments are described for the determination of the angle at which waves deviated by the upper layer reach the ground. It is shown that waves arriving at the ground from the ionised layer produce a "stationary wave" system. From considerations of the values of the electric and magnetic vectors, it is proved that, with a downward ray, greater signal variations will occur with a loop receiver than with a vertical aerial receiver, and that from the ratio of these variations the angle of arrival can be calculated. A loop receiver and a vertical aerial receiver were both adjusted for equal (galvanometer) signals for the direct ray transmission of day time. When night time fading set in the ratio of signal current variations was observed, and it was found that fading was more pronounced on the loop set. At Cambridge the ray from the London (B.B.C.) transmitter returned from the layer arrived at an angle of 60°—70° with the ground.

Examination of the stationary wave system referred to shows that the atmospheric rays are, generally, elliptically polarised, and that this may be sufficient to cause errors in direction finding systems at distances of 30 or 50 miles for overland transmissions.

Approximate values are finally deduced for the reflection co-efficient of the ionised layer for low angles of incidence, and for the inferior limit of electronic density. The reflection co-efficient is estimated at between 0.2 to 6 per cent., according to the attenuation factor assumed for the direct ray, and the electronic density is placed at a minimum of 10^6 electrons per cubic centimetre.

R113.6.—WIRELESS SIGNALS VARIATIONS.—Prof. E. V. Appleton and M. A. F. Barnett (*Electrician*, 11th Dec., 1925).

An article dealing with the same general matter as the foregoing abstract, and more especially with the measurement of the angle at which the reflected waves reach the ground. Variations with height of the three dimensional electric and magnetic vectors of the "stationary wave" system are illustrated by diagram and evaluated in a table.

R.134—THE RECTIFICATION OF SMALL RADIO FREQUENCY POTENTIAL DIFFERENCES BY MEANS OF TRIODE VALVES. PART II.—F. M. Colebrook (E.W. & W.E., Dec., 1925).

R200.—MEASUREMENTS AND STANDARDS.

R240.—RATING CIRCUIT RESISTANCE.—G. H. Browning (*Q.S.T.*, Dec., 1925.)

An attempt is made to specify a quantity "to give an easy way of rating the worth of a circuit used in the reception of radio signals." The ratio R/X is suggested as suitable, R being the *H.F.* resistance and X the inductive reactance ($2\pi fL$) of the circuit. Curves are given for this ratio against

Digitized by Google

wave-length for a number of coils of spaced and of non-spaced winding, while an extended curve for a single coil shows a considerable tuning region where the ratio is a minimum and almost constant. The article concludes with remarks on the choice and design of coils.

R261.—MESURE DE LA DIFFÉRENCE DE POTENTIEL MAXIMA AUX BORNES D'UN CIRCUIT PARCOURU PAR DU COURANT ALTERNATIF.—F. Bedeau (*Onde Elec.*, Nov., 1925).

An article dealing with the well known "slide back" method of measuring the maximum of an oscillating or alternating E.M.F. After considering the general principles and advantages of the arrangement, the author points out the disadvantage and the difficulty of obtaining an absolutely zero value of anode current due to the very slight slope of the anode current curve at the region involved. A satisfactory solution is recommended by the resistance coupled arrangement shown in Fig. 1, where V_x is the input to be measured. If the second valve be already lit, switching on the first valve will give a P.D. across R, causing a diminution of current through mA. In the absence of the input voltage V_x, the mean voltage of the first grid is made negative by the battery (and potentiometer for fine adjustment) until the reading of

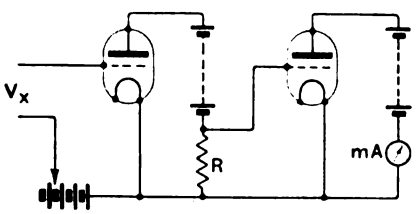

Fig. 1.

mA is again a maximum. This is repeated with V_x applied, in the usual manner of the slide-back method. The resistance R can conveniently be of the order of a megohm, on account of the high internal impedance of the valve round the region of zero current. A note follows on calculation, the choice of valves, and calibration.

A supplementary note by P. David emphasises the advantage of the arrangement in determining peak values when the positive and negative half cycles are not of equal amplitude. This is readily done by reversing the connections of V_x.

R283.—IRON CORED CIRCUITS :—

(*a*) The Inductance and Loss Resistance of an Iron-Cored Circuit.
(*b*) Damped Oscillations in an Oscillatory Circuit with Iron Core.
(*c*) Switching-in Effects in an Oscillatory Circuit with an Iron Core.
(*d*) Oscillations in Coupled Circuits when the Secondary Circuit contains an Iron Core.
—H. Plendl, F. Sammer and J. Zenneck (*Zeit. f. Hochfreq*, 26, No. 4, 1925).

Four articles on the behaviour of circuits containing an iron-cored inductance, all the measurements being made at frequencies of the order of 500.

In (*a*) measurements of the inductance and loss resistance are described. The alternating current through, and the voltage across the iron-cored coil, were measured, and a dummy circuit of a variable resistance and an air-cored inductance was substituted and adjusted to equality. Different values of steady current up to 2 amps were also sent through the iron-cored circuit with the A.C. superimposed. Result curves of the inductance and loss-resistance under the various conditions are given.

(*b*) Deals with the effect of the iron-cored circuit on oscillations set up in a secondary circuit by a freely excited primary. The effects are well illustrated by a series of oscillograms, taken with a Braun tube. A switch permitted the substitution of a dummy circuit, as in (*a*), similarly adjusted to equality with the iron-cored circuit. The primary was excited into free oscillation by switching discharge of its condenser after charging to known potentials. An extensive series of oscillograms show the comparison between the secondary oscillations with and without the iron-cored, when the primary condenser was charged to various voltages and its circuit variously coupled to the secondary.

In (*c*) are considered the effects of switching in a generator to a circuit containing a condenser and an air-cored inductance (for resonance adjustment) and the iron-cored circuit under consideration. Curves are given for the current-voltage characteristic of the circuit under different conditions, and Braun tube oscillograms show the transient effects on switching.

In (*d*) a generator of the order of 500 cycles is included in a primary circuit with a condenser and two air-cored coils, one of these being coupled to the secondary, which contains a condenser and the iron-cored circuit. Curves are given for the induced secondary voltage against the current in that circuit, and for primary and secondary current with machine voltage for various values of coupling between the circuits. Oscillograms are also given for primary and secondary currents for different couplings and machine voltages. Many of these show the beating phenomena of coupled circuits, and these are discussed with reference to the conditions.

R300.—APPARATUS AND EQUIPMENT.

R342.7.—CONSTRUCTION D'AMPLIFICATEURS DE PUISSANCE SANS DISTORTION.—E.W. Kellogg. (*Onde Elec.*, Nov. and Dec., 1925). Translation and Reprint from *Journ. Amer. I.E.E.*, May, 1925.

The paper deals with the problem of obtaining the maximum possible output from a given amplifying valve, with negligible distortion. An amplifying valve can conveniently be rated in terms of the output in watts obtainable when a sinusoidal voltage, of as great amplitude as can advantageously be utilised, is applied to the grid. This rating is much less than that of the same valve used as an oscillator.

From a set of static characteristics for a given valve, the dynamic characteristics for any load can be plotted. From this the power output and distortion can be evaluated, examples being given.

Digitized by Google

An optimum value of load resistance is given as twice the internal impedance of the valve, with the H.T. voltage limited to a certain value. An increase of this value would lead to excessive heating of the anode, and different rules apply, calling for greater grid bias and load. The symmetrical circuits of the "push-pull" system are discussed, and it is stated that while this reduces distortion, it will not make up for incorrect operation of the valves, nor will it greatly increase the output per valve.

The dynamic characteristics for a reactive load are not readily plotted. For most practical purposes of design, however, it is sufficient to determine the optimum conditions for a resistive load, and then to make the impedance of the reactive load high enough to maintain the anode current variations within the limits determined for the resistive load.

An important application of the principles dealt with is in the design of complete transmitters for telephony. Here serious distortion results from over-working the modulator valves. For moderately deep modulation it is stated that there should be from two to four modulator valves for each oscillator.

The closing paragraphs discuss certain details of design.

R342.6.—A Three-Tube Neutrodyne for Short Waves.—D. Ablowich, Jr. (*Q.S.T.*, Dec., 1925).

A description of a three-valve receiver set employing the arrangement of neutrodyne shown in Fig. 1. The anode coils have 8 turns of 22 D.C.C. wire wound on a 1¾ in. diameter tube. The grid coils have 40 turns of the same wire wound on a

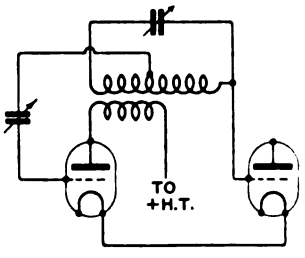

Fig. 1.

2½ in. diameter tube. The coil is tapped at 8 turns for connection to the neutralising condenser, while an auxiliary tuning tap is taken off at 25 turns. With a condenser of .000 25μF the 25 turns tune from 80 to 170 metres and the 40 turns from 145 to 235 metres.

R344.1.—Valve Maintained Tuning Forks.—T. G. Hodgkinson (*Proc. Phys. Soc.*, London, Dec., 1925).

The paper first considers the original (and more usual) case of a fork system with the magnet coils directly connected to the valve electrodes. Attention is devoted to the effect of the valve electrode conductances, and to the direction of the coil windings, with expressions for the various cases. In the second part of the paper is discussed the case of a fork system with transformers between the valve electrodes and the fork magnet coils. It is shown that this arrangement has considerable advantage—especially for low frequency forks—in that it permits more winding space for the valve coils thus letting the impedance of the anode coil be comparable to the impedance of the valve. It is also shown that it is possible to adjust the phase of the driving current in such a way as to reduce the difference between the note of the maintained system and that of the true fork to zero.

R345.—Note sur un Nouveau Procédé de Modulation des Emetteurs à Lampe.—P. David (*Onde Elec.*, Nov., 1925).

The method described is an interesting expansion of the standard "constant current" or "choke control" system of modulation.

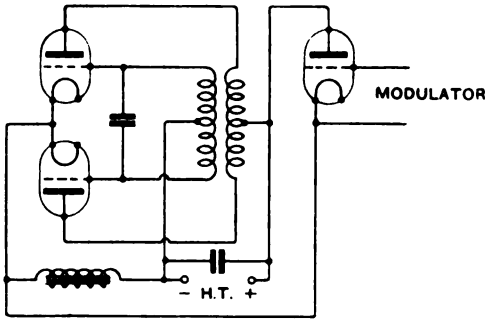

Fig. 1.

The method is primarily illustrated by Fig. 1, showing two valves employed symmetrically as oscillators. The choke is placed between the negative H.T. lead and the filament, so that, without modulation occurring, the steady drop of voltage across the ohmic resistance of the choke makes the oscillator grid negative. The incidence

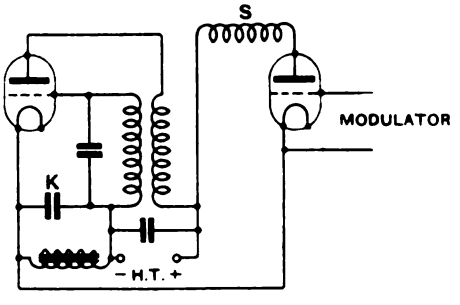

Fig. 2

of modulation causes the usual audio-frequency voltage fluctuations across the choke. These variations are applied, part to the anodes (as in

Digitized by Google

the normal method of choke control) and *part to the grids of the same valves.* The grid variation being preponderant gives a more powerful modulation.

The system is equally applicable to an oscillatory system not symmetrically disposed, as shown in Fig. 2. It is then necessary to shunt the choke by a condenser *k* by-passing for radio frequencies, and to insert an H.F. choke *s* in the modulator circuit to keep the high frequency current out of that circuit.

It is also pointed out that only part of the oscillator H.T. voltage may be applied to the modulator.

If iron cored, the choke should not be saturated by the steady anode current, and the H.T. source should be shunted by a condenser passing musical frequencies.

Several oscillograms are given showing modulation results with the arrangement of Fig. 1.

R374.5—THE NEW CARBORUNDUM DETECTOR.—M. L. Hartmann and J. R. Meagher (*Q.S.T.*, Dec., 1925).

The paper describes work in the Research Laboratory of the Carborundum Company, Niagara Falls, with a view to finding carborundum of the most efficient rectifying qualities, the best type of mounting and the correct pressure between crystal and contact. It is stated that with a particular variety of carborundum never previously used for rectification, it was found desirable to press the crystal against the hardened metal plate with a pressure of more than 5 lbs. A detector of fixed pressure contact is illustrated and described, with a diagram of its characteristic curve. The complete unit comprises crystal, potentiometer with battery, and by-pass condenser. Mechanical pressure being fixed, the only adjustment is that of the potentiometer for the position of rectifying bend.

R376.3—DEMONSTRATIONS OF THE PUBLIC ADDRESS SYSTEM IN EUROPE.—A. F. Rickard (*Elect. Communication*, Oct., 1925.)

An historical account of the progress of the Western Electric Company's public address system in Europe, more especially in Great Britain. Descriptions are given of various occasions when the system has been used since its first appearance in November, 1922. Considerable prominence is given to its use at the opening of the Wembley Exhibition by H.M. the King. Another notable occasion mentioned was the use of an extra large wooden projector in a demonstration at Southampton to show the utility of the system in directing ships into dock berths. With this projector speech could be understood up to one and a half miles from the berth. A note is given on its use at sports meetings, etc., and a short concluding section names a few of the occasions when the system has been used on the Continent.

R382.—TOROIDS.—F. J. Marco (*Q.S.T.*, Dec., 1925).

After considering the disadvantages of solenoidal pattern windings in H.F. amplifier circuits, the author points out the theoretical advantage of the torus in that it has practically no external field. He then considers the design of toroidal coils, working from the Bureau of Standards formula

$$L = .004\,606\, N^2\, H \log \frac{r_2}{r_1}.$$

Where N is number of turns, H thickness, r_2 the outer and r_1 the inner radius. Curves are given for the ratio r_2/r_1 for maximum inductance and for maximum L/R. The use of toroidally wound coils for inductively coupled H.F. transformers is then considered, the author concluding that it is desirable to wind the secondary as a complete torus with the primary inside it to about one-third of its circumference. It is pointed out that the toroid is not immune from electrostatic "pick-up," but it is claimed that this pattern of coil is more easily shielded without increase of effective resistance. Illustrations are given of several commercial forms of toroidal windings.

R386.—AMATEUR FILTER PROBLEMS.—F. S. Dellenbaugh (*Q.S.T.*, Dec., 1925).

An article dealing with the design of filter circuits for smoothing a rectified 25-60 cycle supply. An extensive table of design data for inductance coils with iron cores is given, with diagrams of suitable complete filter circuits. Instructions are also given for testing, especially with regard to the best air gap in the magnetic circuit of the iron cored coils.

R388.—A NOTE ON THE CATHODE RAY OSCILLOGRAPH.—F. Richard Terroux (*Journ. Frank. Inst.*, Dec., 1925).

The author suggests the use of a quartz window to facilitate photography of the fluorescent pattern. It is pointed out that with the fluorescent material on the inside of a glass bulb, relatively long exposure of a steady pattern is necessary, while with instruments (*e.g.*, that of Dr. A. B. Wood) photographing inside the vacuum, considerable handling and pumping are necessary. The author describes an arrangement using a quartz window, with a highly sensitised plate mounted externally to it. Exposures down to about 1/100th second are illustrated. The fluorescent material was Willemite, but it is suggested that a mixture of calcium tungstate (as in the Western Electric tube) would be superior, while the quartz sheet could be made thinner than that actually employed. It is pointed out that as the photographic plate is placed against the quartz, no lens system is necessary, and that the arrangement should prove suitable for the convenient photography of impulsive phenomena.

CORRECTION.

In the advertisement pages of the December issue an error occurred in the announcement of Messrs. A. Vandam, Caxton House, Westminster, S.W.1. The O'Keefee coil, which is referred to, is described as the smallest coil with the greatest *capacity* instead of the greatest *efficiency*.

Digitized by Google

Some Recent Patents. [R008

A CAPACITY LEAD-IN.

(*Application date, 19th November, 1924. No. 243,517.*)

An attempt to solve the lead-in problem is disclosed in the specification of British Patent No. 243,517, granted to A. H. Guiness, the accompanying diagram illustrating the idea of the invention. It is well known that it is not always easy to obtain a really efficient lead-in when the aerial has to be taken to some room in an ordinary house not provided with commercial lead-in insulators, and similar fittings. According to the invention, instead of passing the wire through the window or wall, connection between the aerial and the receiving system is capacitative. Two metal plates are used, one on either side of the glass window, which forms the dielectric. Thus, in the accompanying illustration, it will be seen that one plate *A* is provided with a terminal *T*, which is connected to the aerial lead-in, while another plate *P*, provided with another terminal *X*, is connected to the aerial terminal of the receiver. The glass window shown at *G* constitutes the dielectric. The two plates are kept in position by means of two arms *R* of insulating material which are fastened together by means of a U-shaped spring, not shown, of course, in the illustration. This spring is placed over the top of the window, which thus supports the two plates and the spring action causes the plates to keep in contact with the glass. We should imagine that a lead-in of this nature would be more useful on the shorter wave-lengths.

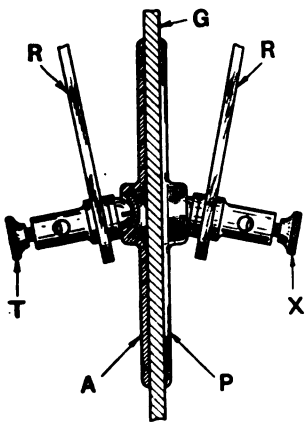

A RESISTANCE COUPLED REFLEX RECEIVER.

(*Application Date, 18th June, 1924. No. 243,039.*)

A modification of the well-known form of reflex receiver, in which the valve is made to amplify both high frequency and low frequency, is disclosed in the British Patent No. 243,039 granted to J. Scott-Taggart. The accompanying illustration indicates the broad idea of the invention. The receiver employs two valves *A* and *B*. The first valve *A* is employed as a high frequency and low frequency amplifier simultaneously, while the second valve *B* merely acts as a detector. The aerial circuit *E* consists of an ordinary inductance and variable capacity in parallel, which is virtually connected between the grid and filament of the first valve. Actually the grid-filament circuit of the first valve includes a condenser *C*1, of the order of 0.25μF, a high resistance *R*1 of the order of 70 000 ohms shunted by a condenser to act as a high frequency by-pass, and also the H.T. The anode circuit of the first valve *A* contains the primary winding of a high frequency transformer *T*, the secondary of which is shown tuned and connected between the grid and filament of the second valve *V*, a grid leak and condenser *GL* being included in order to make the second valve rectify. The anode circuit of the valve *B* contains a reaction coil *R* and also a high resistance *R*1, while the anode circuit of the first valve *A* also contains the telephones or loud-speaker. The mode of operation is briefly as follows: High frequency potentials due to incoming signals will be impressed between the grid and filament of the first valve, where they will be amplified and passed on by the high frequency transformer *T* to the grid filament circuit of the second valve. Here the amplified potentials will be detected, and the anode circuit of the second valve will then contain low

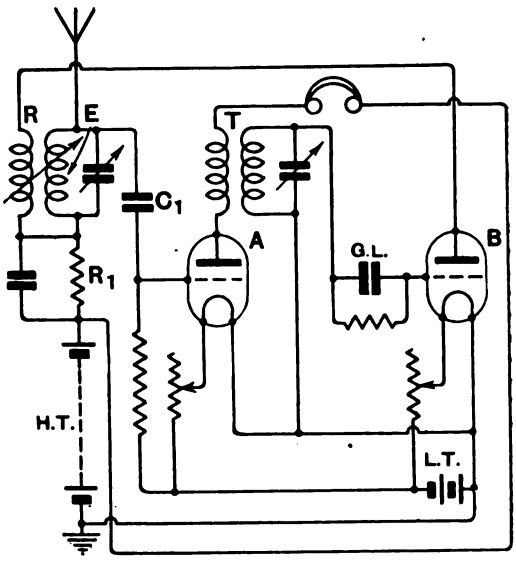

frequency components. As this anode circuit contains the high resistance *R*1, low frequency potential will be set up across it which will be passed on to the grid of the first valve, by means of the 0.25μF condenser *C*1, where they will be amplified by the valve *A*, and cause the telephones to be operated. An additional feature of the circuit, of course, is the regenerative effect of the detector valve, and the aerial circuit by means of the reaction coil connected as shown in the diagram.

Digitized by Google

The circuit is really a normal reflex arrangement in which the resistance replaces the low frequency transformer or choke.

THE "KONE" LOUD-SPEAKER.

(*Application date, 9th August,* 1924. *No.* 240,596.)

The above British Patent, No. 240,596, granted to the Western Electric Company, Limited, appears to be one of the specifications relating to the well-known "Kone" loud-speaker. The accompanying diagram illustrates the general idea and construction of the "Kone," which will be seen to comprise a metal framework *F* supported by a base *B*, the framework *F* being essentially circular in shape and carrying a truncated cone *C*. To the base of this cone is attached another complete cone *K*, the apex *A* of which communicates with the electromagnetic system. That actually used is the Baldwin or balanced type, shown at *E*, and supported by a bracket *X* attached to the framework *F*. The armature of the system is connected to the apex *A* by means of a link *L*. When the armature is caused to vibrate by the passage of speech currents the link *L* is pulled in and out, and the movement is imparted to the two cones which vibrate as a whole, and cause a similar vibration in the air. The diameter of the cone is of the order of 12 to 18 in. and is made of specially treated paper or similar material. The advantage of this type of receiver is that certain frequencies, especially the lower ones, are not likely to be cut off as is usually the case with the normal type of sound conduit and horn.

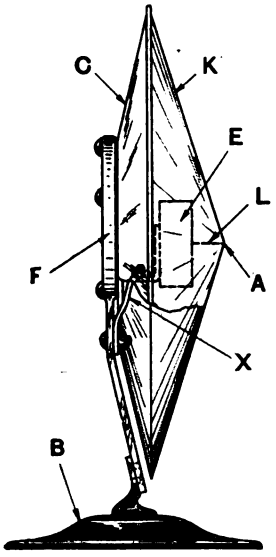

AN INTERESTING FILAMENT.

(*Convention date, France, 26th May,* 1924. *No.* 234,480.)

The above British Patent, granted to J. Hawadier, describes yet another method of dispensing with large storage batteries for filament heating of small valves. It is well known that if alternating current is used directly to heat the filament many undesirable effects are obtained. Hitherto equi-potential cathodes have been employed in which the A.C. element heats a large surface, which is used as a cathode, but this method necessitates a rather large current consumption. According to the present invention, however, a valve *V* is provided with two filaments, one filament *C* is heated by alternating current at any desired voltage, and the filament is then covered with some non-conducting substance *I*. It is pointed out in the specification that before any substantial emission is obtained it is necessary to raise the temperature

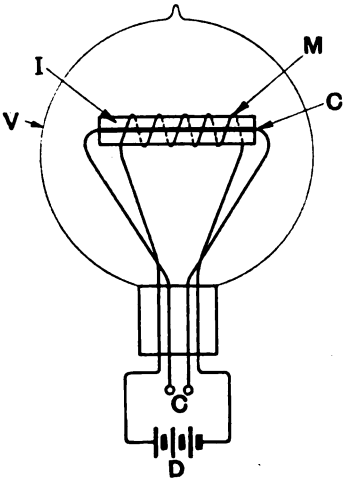

of the filament to a certain degree, dependent upon the nature of the substance. There is actually a particular value at which practically no emission takes place, and yet if increased by a few degrees immediately causes electronic emission to occur. Accordingly, the insulating material is raised to some predetermined temperature by the alternating current, and an auxiliary filament *M* is wound over the insulating material, the filament being provided with means of connection to an accumulator. The current passing through the filament from the accumulator is sufficient to raise the temperature to the desired additional number of degrees to produce sufficient emission. It is stated that it is preferable to employ for the auxiliary filament a material having a negative temperature co-efficient. Although the scheme appears to be very ingenious we do not see the advantage over the ordinary equi-potential cathode, since it would appear to be quite possible to make the insulating material a few degrees hotter by passing more alternating current through the main filament, thereby obviating the necessity of any direct current through the auxiliary filament.

AN INTERESTING RECEIVING SYSTEM.

(*Application date, 22nd July,* 1924. *No.* 243,407.)

A rather interesting method of receiving signals by stopping and starting the generation of continuous oscillations is described in the above British Patent Specification by D. B. Fletcher, D.Sc., and S. Brydon, D.Sc. It is well known that the condition of a valve determining the production of oscillation is dependent upon the grid potential and the coupling existing between the anode and grid circuits. As soon as the valve commences to oscillate there is a very considerable

Digitized by Google

change in the anode current, and consequently if incoming signals can be influenced to control the oscillation of a valve a very efficient method of detection is assured. The circuit shown in the accompanying illustration indicates one method of arranging a series of valves to act in this manner. It will be seen that the aerial circuit consists of the usual condenser $C1$ and inductance $L1$. The grid circuit of the first valve contains the tuned circuit $L2$ $C2$, and also the inductance $L3$, which is coupled to the aerial inductance $L1$. The anode circuit of the valve $V1$ contains an inductance $L4$, which is coupled to the inductance $L2$ so as to bring about a regenerative effect. The potentials produced by the anode of the valve $V1$ are communicated to the grid of the valve $V2$ by means of a condenser K, the valve $V2$ acting as a rectifier. The lower end of the inductance $L3$ in grid circuit of the

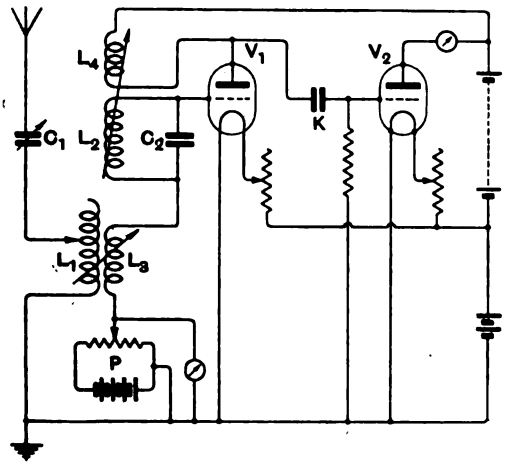

valve $V1$ is connected to the slider of a potentiometer P provided with a battery and a voltmeter. The successful operation of the scheme depends upon the correct adjustment of the grid potential and coupling existing between the grid and the anode circuits. This has to be found by a method of trial and error, so that the slightest increase due to incoming signals causes the valve to oscillate, and immediately ceases as soon as the impressed potentials are removed. The patent appears to be of rather a limited nature, and seems to be confined to the adjustment rather than the circuital arrangement, the specification containing very specific instructions as to the best manner of adjusting the first valve.

A STAMPED GRID.

(*Convention date* (*U.S.A.*), *23rd February*, 1924. *No.* 229,704.)

A stamped grid is described in the above British Patent, No. 229,704, which has been granted to the Westinghouse Lamp Company. The arrangement will be seen from the accompanying illustration, in which it will be noticed that a rectangular shaped anode A is employed (which is half cut away), H a hairpin filament, and the special grid G. This is stamped out from a sheet of rectangular metal, after which the bars B, which are thus formed are displaced first on one side and then on the other as shown at D. The sides of the metal are made of channel section X so that they can

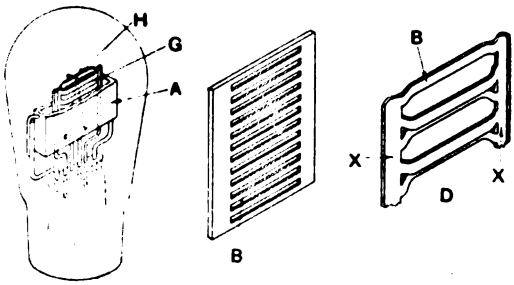

be attached to upright supports. The object of the invention is, no doubt, to provide a very rigid structure for the grid instead of the more usual helix or spiral of some description. We shouldimagine that, providing the other electrodes were suitably supported, the valve would be very non-microphonic.

AN A.C. FILAMENT SUPPLY.

(*Application date*, *19th June*, 1924. *No.* 239,939.)

Many schemes have recently been devised for utilising alternating current supply for filament heating in a valve receiver. The arrangement shown in the accompanying illustration is described in British Patent No. 239,939 by E. L. W. Bryne, which, in addition to details of the fundamental arrangement, describes several specific details and modifications of the idea. The power

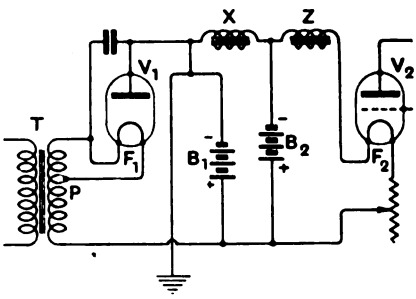

is obtained from a transformer T which is provided with a tapping on the secondary at P and heats the filament F_1 of a rectifying valve V_1. This rectifying valve charges a battery B_1, which is connected through a choke X to a battery B_2, which in turn is connected to the filament F_2 of a valve V_2 in the receiver, another reactance Z being connected between the end of the second battery and the filament. The battery B_1 is charged by pulsating currents derived from the valve V, and in turn is said to charge the battery

Digitized by Google

B_2, the object of the chokes X and Z being to eliminate any pulsating voltages from the valve filament F_2 which might be obtained from the source of supply. Floating batteries of this nature are well known, and we should imagine that the particular arrangement should prove quite successful in practice, provided that the chokes are suitably designed and constructed.

A SPACE CHARGE VALVE.

(*Convention date* (*Germany*), *27th November*, 1923. *No.* 225,541.)

A special type of valve designed to work with a very low filament consumption and also to overcome the detrimental effect of space charge is described by N. V. Philip's Gloeilampenfabrieken in British Patent No. 225,541). One form of construction is shown in the accompanying illustration, in which it will be seen that the valve comprises the usual glass envelope V and the foot P,

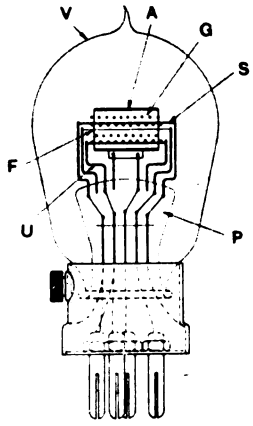

which supports an anode A of cylindrical formation and an ordinary helical grid or control electrode G, while the filament F is of the usual straight wire variety fixed to two upright supports U. The filament F is coated with some thorium or similar compound so that it works at an exceedingly low temperature. The necessary power required to operate the valve is further reduced by providing a space charge grid S arranged near the filament and intended, of course, to suppress the space charge, which thereby allows a far greater filament emission to reach the anode. The novelty of the invention seems to lie in the provision of the method of neutralising the space charge by an additional grid or other electrode, in combination with a very low temperature filament. This, of course, gives a valve which requires the very minimum amount of power in order to operate it.

DETECTION WITH A FOUR-ELECTRODE VALVE.

(*Convention date, France, 15th October*, 1923. *No.* 223,580.)

A system of detection employing a four-electrode valve is claimed in the above British Patent by Compagnie Générale de Télégraphie sans Fil. The accompanying diagram illustrates the idea, and it will be seen that an ordinary aerial system $ALCE$ is employed which is inductively coupled to a tuned circuit $L1$ $C1$. This is connected between the outer grid O and some point on the filament heating circuit, such as at F. The anode P is connected directly to the high tension battery. The inner grid I is also given a positive potential so as to reduce the effect of the space charge by means of the same high tension battery, but the inner grid circuit includes an inductance $L3$ and telephone receivers T. The inductance $L3$ is coupled directly to the aerial inductance $L1$, and is arranged so as to provide a regenerative effect when taken to the point of oscillation. The patent, to us, appears to be rather of a limited nature, as there does not appear to be anything very fundamental and novel in the circuit shown.

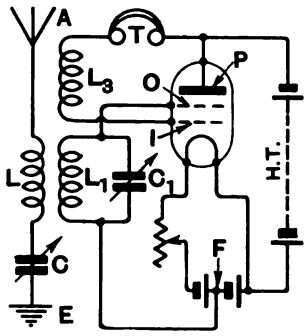

Digitized by Google

EXPERIMENTAL WIRELESS & The WIRELESS ENGINEER

VOL. III. MARCH, 1926. No. 30.

Editorials.

Who Discovered the Long Range of Short Waves?

A DISCUSSION on this subject has been going on lately in the correspondence columns of the *Electrician* between Mr. L. B. Turner and Mr. Marconi. In the issue of 8th January, Mr. Turner stated that "within the last two or three years it has been discovered that with much shorter waves the Austin-Cohen formula overstates the attenuation enormously. It is largely *this discovery, made by wireless amateurs transmitting with the pitifully useless wavelengths* (*as all thought*) allotted to them by the authorities which has stimulated renewed efforts to elucidate the behaviour of the upper atmosphere." The italics are ours in order to indicate the words to which Mr. Marconi took exception in a letter in the issue of 22nd January, in which he drew attention to papers read by Mr. C. S. Franklin and himself in 1922 dealing with experiments down to wavelengths of 2 metres carried out since 1916, and to a paper read by himself in July, 1924, in which he specifically mentions the inapplicability of the Austin-Cohen formula to short wave phenomena. In the issue of 29th January Mr. Turner points out that the 1922 papers deal entirely with short range directive work, and that the 1924 paper was published on 25th July, when the work of amateurs and others had already proved the astonishing ranges obtained with short waves. Mr. Turner gives a number of references to *The Wireless World* between April and July to prove the activities of amateurs in this sphere before Mr. Marconi's lecture. On 5th February Mr. Marconi returns to the charge, pointing out that these amateur transmissions were all with wavelengths of 100 metres or more, and could not be differentiated from the freak transmissions frequently observed at night-time. He can find no anticipation of his discovery that the daylight range increased as the wavelength was reduced from 100 metres down to 32 metres. In the current number Mr. Turner makes a brief reply, but adds nothing further of note to the discussion.

Another Question of Nomenclature.

UNDER this title we publish in this issue an interesting letter from Lieut.-Col. Edgeworth, who, while agreeing with our protest against the misapplication of the term "impedance" to what we called the "differential resistance" of a valve, makes further suggestions with which we do not entirely agree. The main points of his letter are: (1) That the impedance is the real quantity obtained by dividing the terminal P.D. by the current; (2) that in the method involving imaginary quantities, reactance is regarded as an imaginary resistance; and (3) that the quantity $R+jX$ should be called a complex resistance.

Now with regard to the first point, we do not agree that one is entitled to give this

Digitized by Google

narrow interpretation to the term "impedance." Unless two alternating quantities, such as P.D. and current, are in phase, one can only define their quotient by adopting some convention, and Col. Edgeworth adopts the usual convention of taking their R.M.S. or maximum values irrespective of their phase, but when one remembers that the current and P.D. may be in the same direction at one moment and in the opposite direction at another moment, and that one of them may be zero when the other is a maximum, it will be obvious that their quotient, although a real number, is anything but a real physical quantity. When one writes $V=I\times Z$ there is no reason why Z should be limited to giving the mere numerical relation between the voltmeter and ammeter readings when it can be made to give also the phase relations between V and I, nor why it should cease to be called the impedance when so used.

Turning to the second point of Colonel Edgeworth's letter, we doubt whether it is strictly correct to say that reactance is regarded as an imaginary resistance. In the method referred to, resistance is treated as a real quantity and reactance as an imaginary quantity, or, to be even more correct, reactance is multiplied by $j=\sqrt{-1}$ to make the combination imaginary, but that is something very different to regarding it as an imaginary resistance.

We have several reasons for disagreeing with the third suggestion. $R+jX$ is one way, and a very informative way, of stating the impedance, and therefore "impedance" it should be called. The second term jX has nothing to do with resistance, real or imaginary, and therefore the name "resistance," however qualified, should not be applied to it. We prefer to keep the term "resistance" strictly for that component of the impedance which causes a dissipation of energy, whilst the term "reactance" is applied to the other component which is associated with the storing and restoring of energy in the magnetic and electric fields. The expression $R+jX$ cannot be called a vector, but when it is multiplied by a vector, such as the current I, the product $IR+jIX$ is another vector made up of two components, one IR in phase with the current, and the other IX 90^0 ahead of I, for this is the meaning of the j placed before the I. Hence $R+jX$, whilst not a vector itself, performs an operation on a vector, producing another vector $\sqrt{R^2+X^2}$ as big as the first one and ahead of it by an angle ϕ where $tan\ \phi=X/R$.

Hence, of the names mentioned in Colonel Edgeworth's letter, "generalised or complex resistance" should be ruled out because of the misapplication of the word "resistance." "Operator" by itself is too vague, but "operator impedance" or "impedance operator" are both correct and self-explanatory. Although "impedance vector" would be incorrect, in that it is not a vector, "vector impedance" would be a good term, the word "vector" being used as an adjective to indicate that the impedance was given in a form suitable for application to vectors. But whether written $\sqrt{R^2+X^2}$ or $R+jX$ or $Z\underline{/\theta}$ the quantity is an impedance and should be so called.

Early Work of Professor A. S. Popoff.

AN interesting letter relating to the early work of Professor A. S. Popoff appears under Correspondence in the issue of *The Wireless World* for 24th February.

Readers are probably aware that there has been some controversy respecting the date when Professor Popoff first demonstrated the practical application of wireless to communication by means of the morse code. The statement had been published that Professor Popoff at a meeting of the Russian Physico-Chemical Society demonstrated the principle by transmitting by means of wireless the morse letters spelling the words "Heinrich Hertz," on the 7th May, 1895. A careful investigation has produced from Russia the correction, supported by first-hand evidence, that this particular experiment did not take place at the meeting of the Society on 7th May, 1895, but nearly a year later before the same Society at a meeting held on 24th March, 1896.

In view of the fact that a good deal of propaganda has been put out claiming for the late Professor Popoff priority in the practical demonstration of wireless telegraphy, and, since this report has been widely published, we think the matter of sufficient importance to make this special reference to the letter appearing in *The Wireless World*.

Digitized by Google

Rejectors and Absorbers.

By Professor G. W. O. Howe, D.Sc. **[R432.1**

REJECTORS and absorbers are generally regarded as two different devices for excluding from the receiving circuits unwanted oscillations of a given frequency. Such devices are often called wave-traps and are used to prevent a nearby transmitting station from interfering with the reception of a distant station. Not only is the receiving system tuned to the distant station, but a special device is introduced to discriminate very selectively against one definite interfering frequency. If there are several interfering stations of different frequencies, then several such devices may be employed, each tuned to exclude one of the interfering stations. In a draft list of definitions recently under discussion, the following descriptions were given:

Absorber.—An arrangement whereby energy received on an unwanted wave-length can be withdrawn from the receiving circuits otherwise than through the detector.

Rejector.—A combination of inductance and capacity joined in parallel, applied to a receiving circuit in such a way that it imposes the maximum possible impedance to currents of a specific frequency in the path in which the rejector is placed, its impedance to other frequencies being comparatively small.

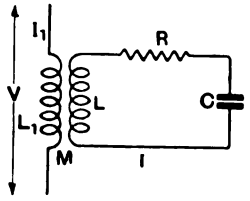

Fig. 1.

The impression given by these definitions is that in the first device the energy is side-tracked into the absorbing circuit where it is dissipated, whereas in the second device the impedance prevents the interfering induced E.M.F. from producing any appreciable current in the aerial.

We propose to show that the two devices are practically identical, not only in their results but also in their mode of operation.

In Fig. 1 an absorbing circuit is shown having inductance L, capacity C, and resistance R. This circuit is coupled to the receiving aerial by means of the two coils of self inductance L_1 and L and mutual inductance M. In vector notation we have in the aerial circuit

$$V = j\omega L_1 I_1 + j\omega M I \quad .. \quad (1)$$

and in the absorbing circuit

$$j\omega L I + IR + \frac{I}{j\omega C} + j\omega M I_1 = 0$$

$$\text{or} \quad I\,[R + j\,(\omega L - 1/\omega C)] = -j\omega M I_1$$

$$\therefore \quad I = -j\,\frac{\omega M I_1}{R + j\,(\omega L - 1/\omega C)} \quad .. \quad (2)$$

Substituting this value of I in equation (1) we have

$$V = \left[j\omega L_1 + \frac{\omega^2 M^2}{R + j(\omega L - 1/\omega C)}\right] I_1$$

$$= \left[j\omega L_1 + \frac{\omega^2 M^2 R - j\omega^2 M^2 (\omega L - 1/\omega C)}{R^2 + (\omega L - 1/\omega C)^2}\right] I_1$$

$$\therefore \quad \frac{V}{I_1} = \left[\frac{\omega^2 M^2 R}{R^2 + (\omega L - 1/\omega C)^2} + j\omega\left\{L_1 - \frac{\omega M^2 (\omega L - 1/\omega C)}{R^2 + (\omega L - 1/\omega C)^2}\right\}\right] \quad ... \quad (3)$$

The first term represents the effective resistance introduced into the aerial by the presence of the absorbing circuit; any resistance in the coil L_1 would be added to it. The second term represents the effective reactance; whether the inductance L_1 is increased or decreased by the presence of the absorbing circuit will depend on the sign of $\omega L - 1/\omega C$, *i.e.*, on whether the resonant frequency of the circuit is above or below the frequency of the current under consideration. If the absorbing circuit is tuned to the resonant frequency $\omega/2\pi$ then $\omega L = 1/\omega C$ and equation (3) becomes

$$\frac{V}{I_1} = \frac{\omega^2 M^2}{R} + j\omega L_1 \quad .. \quad .. \quad (4)$$

Digitized by Google

In this case the presence of the absorbing circuit does not affect the apparent inductance of the primary or aerial circuit, but introduces an equivalent resistance ω^2M^2/R, *which increases as R is made smaller.* Hence the presence of a low resistance tuned absorbing circuit is equivalent to inserting a high resistance in the aerial circuit. This equivalent resistance is proportional to the square of the mutual inductance. If the two coils are similar and are very tightly coupled together, $L_1 = L = M$, and the equivalent resistance becomes ω^2L^2/R.

Equation (3) can be simplified by introducing two symbols, one to represent the frequency conditions and the other to represent the damping conditions. If ω_0 is the resonant angular frequency $(2\pi f_0)$ of the absorbing circuit, then $\omega_0^2CL=1$; for any other angular frequency $\omega = 2\pi f$ we shall put $\omega^2CL = x$, so that $x = \omega^2/\omega_0^2 = f^2/f_0^2$. We shall also put $y = CR^2/L = R^2/\omega_0^2L^2$. It will be seen that $R^2/\omega^2L^2 = y/x$. If δ is the logarithmic decrement of the circuit, then $y = (\delta/\pi)^2$.

Equation (3) may now be written

$$\frac{V}{I_1} = j\omega L_1 + \omega^2M^2\left[\frac{R - j\omega L\dfrac{x-1}{x}}{R^2\left[1+\dfrac{\omega^2L^2}{R^2}\left(\dfrac{x-1}{x}\right)^2\right]}\right]$$

$$= j\omega L_1 + \omega^2M^2\left[\frac{R + j\omega L\dfrac{1-x}{x}}{R^2\left[1+\dfrac{x}{y}\left(\dfrac{1-x}{x}\right)^2\right]}\right]$$

Putting $k = \dfrac{M}{\sqrt{L_1L}}$ for the coupling co-efficient between the two coils, this may be written

$$\frac{V}{I_1} = j\omega L_1 + k^2\frac{L_1}{L}\left[\frac{R + j\omega L\dfrac{1-x}{x}}{\dfrac{xy+(1-x)^2}{x^2}}\right]$$

$$= j\omega L_1 + k^2\frac{L_1}{L}\left[R\frac{x^2}{(1-x)^2+xy} + j\omega L\frac{x(1-x)}{(1-x)^2+xy}\right]$$

$$= k^2\frac{L_1}{L}R\left(\frac{x^2}{(1-x)^2+xy}\right) + j\omega L_1\left(1+k^2\frac{x(1-x)}{(1-x)^2+xy}\right) \quad (5)$$

When tuned to resonance $x=1$ and this becomes

$$\frac{V}{I_1} = k^2\frac{L_1}{L}R\left(\frac{1}{y}\right) + j\omega L_1 = \frac{k^2\omega^2LL_1}{R} + j\omega L_1$$

$$= \frac{\omega^2M^2}{R} + j\omega L_1$$

as already found in equation (4).

The effective resistance thus introduced into the aerial circuit is proportional to the square of the coefficient of coupling between the two circuits and inversely proportional to the actual resistance of the absorbing circuit.

The power dissipated in the combination is equal to the current I_1 multiplied by the component of V in phase with it, or to I^2 multiplied by the effective resistance ω^2M^2/R. This power is all dissipated in the resistance of the absorbing circuit.

We now turn to a consideration of the so-called rejector circuit.

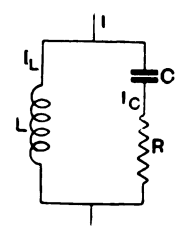

Fig. 2.

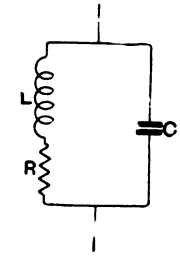

Fig. 3.

Fig. 2 shows a rejector circuit consisting of a condenser of capacity C in series with a resistance R, shunted by an inductance L.

If V is the P.D. across the combination, we have

$$V = I_c\left(R + \frac{1}{j\omega C}\right) = I_L\, jxL$$

$$\therefore\ I = I_c + I_L = V\left(\frac{1}{R+1/j\omega C} + \frac{1}{j\omega L}\right)$$

$$\therefore\ \frac{I}{V} = \frac{j\omega C}{j\omega CR+1} + \frac{1}{j\omega L} = \frac{j\omega CR + 1 - \omega^2CL}{j\omega L(j\omega CR+1)}$$

$$\therefore\ \frac{V}{I} = \frac{j\omega L - \omega^2CLR}{1 - \omega^2CL + j\omega CR}$$

$$= \frac{\omega^4C^2L^2R + j\omega\,[L - \omega^2(CL^2 - C^2R^2L)]}{(1-\omega^2CL)^2 + \omega^2C^2R^2}$$

$$= \frac{(\omega^2CL)^2R}{(1-\omega^2CL)^2 + \omega^2C^2R^2} + j\omega\left\{\frac{L - \omega^2CL\,(L - CR^2)}{(1-\omega^2CL)^2 + \omega^2C^2R^2}\right\}$$

Digitized by Google

putting $\omega^2 CL = x$ and $\frac{CR^2}{L} = y$, this may be written

$$\frac{V}{I} = R\left(\frac{x^2}{(1-x)^2 + xy}\right) + j\omega L\left(\frac{(1-x)+xy}{(1-x)^2+xy}\right) \quad .. \quad (6)$$

If $x = 1$, *i.e.*, for resonance,

$$\frac{V}{I} = \frac{R}{y} + jwL = \frac{L}{CR} + j\omega L = \frac{\omega^2 L^2}{R} + j\omega L$$

Very similar equations are obtained with the arrangement shown in Fig. 3, where the resistance R is in series with the inductance; the final equation for V/I when adjusted to resonance is exactly the same.

It is evident from the foregoing that both devices operate in exactly the same way by introducing a high effective resistance into the aerial circuit at a given frequency; other things being equal the energy absorbed by the circuit is the same in both cases. An absorber could just as correctly be called a coupled rejector, and a rejector could be regarded as a directly connected absorber. By making the two coils of the coupled absorber identical and coupling them very tightly together, one obtains a 1/1 transformer which can just as well be replaced by a single winding, and the absorber thus becomes a rejector.

NOTE.—Equation (5) can be written

$$\frac{V}{I_1} = j\omega L_1 + \omega L_1 k^2 \cdot \frac{\sqrt{x^3 y} + jx(1-x)}{(1-x)^2 + xy}$$

This is a very useful form from which to plot curves; it contains only the reactance of the primary coil and the three variables, k, x, and y. If the coupled circuit is removed, $k = O$ and we are left with the first term.

Radio Society's Annual Dinner.

Dr. W. H. Eccles presided at the Sixth Annual Dinner of the Radio Society of Great Britain held again this year at the Waldorf Hotel, where the dining hall was filled to its maximum capacity.

The speakers included Mr. Reith, Earl Russell and Commander Carter, of the B.B.C., who, in responding to the toasts of the guests, referred to the co-operation given by members of the Society in the service of broadcasting.

Some of the company assembled at the Dinner. On the right of Dr. Eccles is Mr. Reith, Earl Russell, Mr. Klein and Mr. Fogarty. On his left can be recognised Commander Carter, Mr. McMichael and Mr. Maurice Child. Captain S. R. Mullard is seated opposite to Mr. McMichael and Mr. Elwell can be seen in the foreground seated opposite to Capt. Mullard.

Digitized by Google

In this case the presence of the absorbing circuit does not affect the apparent inductance of the primary or aerial circuit, but introduces an equivalent resistance ω^2M^2/R, *which increases as R is made smaller.* Hence the presence of a low resistance tuned absorbing circuit is equivalent to inserting a high resistance in the aerial circuit. This equivalent resistance is proportional to the square of the mutual inductance. If the two coils are similar and are very tightly coupled together, $L_1 = L = M$, and the equivalent resistance becomes ω^2L^2/R.

Equation (3) can be simplified by introducing two symbols, one to represent the frequency conditions and the other to represent the damping conditions. If ω_0 is the resonant angular frequency $(2\pi f_0)$ of the absorbing circuit, then $\omega_0^2CL = 1$; for any other angular frequency $\omega = 2\pi f$ we shall put $\omega^2CL = x$, so that $x = \omega^2/\omega_0^2 = f^2/f_0^2$. We shall also put $y = CR^2/L = R^2/\omega_0^2L^2$. It will be seen that $R^2/\omega^2L^2 = y/x$. If δ is the logarithmic decrement of the circuit, then $y = (\delta/\pi)^2$.

Equation (3) may now be written

$$\frac{V}{I_1} = j\omega L_1 + \omega^2M^2\left[\frac{R - j\omega L\frac{x-1}{x}}{R^2\left[1+\frac{\omega^2L^2}{R^2}\left(\frac{x-1}{x}\right)^2\right]}\right]$$

$$= j\omega L_1 + \omega^2M^2\left[\frac{R + j\omega L\frac{1-x}{x}}{R^2\left[1+\frac{x}{y}\left(\frac{1-x}{x}\right)^2\right]}\right]$$

Putting $k = \frac{M}{\sqrt{L_1L}}$ for the coupling co-efficient between the two coils, this may be written

$$\frac{V}{I_1} = j\omega L_1 + k^2\frac{L_1}{L}\left[\frac{R + j\omega L\frac{1-x}{x}}{\frac{xy+(1-x)^2}{x^2}}\right]$$

$$= j\omega L_1 + k^2\frac{L_1}{L}\left[R\frac{x^2}{(1-x)^2+xy} + j\omega L\frac{x(1-x)}{(1-x)^2+xy}\right]$$

$$= k^2\frac{L_1}{L}R\left(\frac{x^2}{(1-x)^2+xy}\right) + j\omega L_1\left(1+k^2\frac{x(1-x)}{(1-x)^2+xy}\right) \quad (5)$$

When tuned to resonance $x=1$ and this becomes

$$\frac{V}{I_1} = k^2\frac{L_1}{L}R\left(\frac{1}{y}\right) + j\omega L_1 = \frac{k^2\omega^2LL_1}{R} + j\omega L_1$$

$$= \frac{\omega^2M^2}{R} + j\omega L_1$$

as already found in equation (4).

The effective resistance thus introduced into the aerial circuit is proportional to the square of the coefficient of coupling between the two circuits and inversely proportional to the actual resistance of the absorbing circuit.

The power dissipated in the combination is equal to the current I_1 multiplied by the component of V in phase with it, or to I^2 multiplied by the effective resistance ω^2M^2/R. This power is all dissipated in the resistance of the absorbing circuit.

We now turn to a consideration of the so-called rejector circuit.

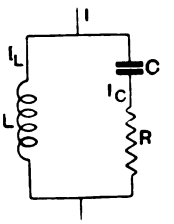

Fig. 2.

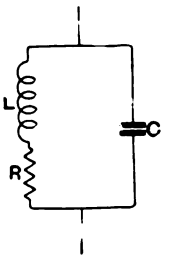

Fig. 3.

Fig. 2 shows a rejector circuit consisting of a condenser of capacity C in series with a resistance R, shunted by an inductance L.

If V is the P.D. across the combination, we have

$$V = I_c\left(R + \frac{1}{j\omega C}\right) = I_L j\omega L$$

$$\therefore\ I = I_c + I_L = V\left(\frac{1}{R+\frac{1}{j\omega C}} + \frac{1}{j\omega L}\right)$$

$$\therefore\ \frac{I}{V} = \frac{j\omega C}{j\omega CR+1} + \frac{1}{j\omega L} = \frac{j\omega CR + 1 - \omega^2CL}{j\omega L(j\omega CR+1)}$$

$$\therefore\ \frac{V}{I} = \frac{j\omega L - \omega^2CLR}{1-\omega^2CL+j\omega CR}$$

$$= \frac{\omega^4C^2L^2R + j\omega[L-\omega^2(CL^2-C^2R^2L)]}{(1-\omega^2CL)^2+\omega^2C^2R^2}$$

$$= \frac{(\omega^2CL)^2R}{(1-\omega^2CL)^2+\omega^2C^2R^2} + j\omega\left\{\frac{L-\omega^2CL(L-CR^2)}{(1-\omega^2CL)^2+\omega^2C^2R^2}\right\}$$

Digitized by Google

putting $\omega^2 CL = x$ and $\frac{CR^2}{L} = y$, this may be written

$$\frac{V}{I} = R\left(\frac{x^2}{(1-x)^2 + xy}\right) + j\omega L\left(\frac{(1-x) + xy}{(1-x)^2 + xy}\right) \quad .. \quad (6)$$

If $x = 1$, *i.e.*, for resonance,

$$\frac{V}{I} = \frac{R}{y} + jwL = \frac{L}{CR} + j\omega L = \frac{\omega^2 L^2}{R} + j\omega L$$

Very similar equations are obtained with the arrangement shown in Fig. 3, where the resistance R is in series with the inductance; the final equation for V/I when adjusted to resonance is exactly the same.

It is evident from the foregoing that both devices operate in exactly the same way by introducing a high effective resistance into the aerial circuit at a given frequency; other things being equal the energy absorbed by the circuit is the same in both cases. An absorber could just as correctly be called a coupled rejector, and a rejector could be regarded as a directly connected absorber. By making the two coils of the coupled absorber identical and coupling them very tightly together, one obtains a 1/1 transformer which can just as well be replaced by a single winding, and the absorber thus becomes a rejector.

NOTE.—Equation (5) can be written

$$\frac{V}{I_1} = j\omega L_1 + \omega L_1 k^2 \cdot \frac{\sqrt{x^3 y} + jx(1-x)}{(1-x)^2 + xy}$$

This is a very useful form from which to plot curves; it contains only the reactance of the primary coil and the three variables, k, x, and y. If the coupled circuit is removed, $k = O$ and we are left with the first term.

Radio Society's Annual Dinner.

Dr. W. H. Eccles presided at the Sixth Annual Dinner of the Radio Society of Great Britain held again this year at the Waldorf Hotel, where the dining hall was filled to its maximum capacity.

The speakers included Mr. Reith, Earl Russell and Commander Carter, of the B.B.C., who, in responding to the toasts of the guests, referred to the co-operation given by members of the Society in the service of broadcasting.

Some of the company assembled at the Dinner. On the right of Dr. Eccles is Mr. Reith, Earl Russell, Mr. Klein and Mr. Fogarty. On his left can be recognised Commander Carter, Mr. McMichael and Mr. Maurice Child. Captain S. R. Mullard is seated opposite to Mr. McMichael and Mr. Elwell can be seen in the foreground seated opposite to Capt. Mullard.

Digitized by Google

H.F. Resistance.

By P. K. Turner, A.M.I.E.E. **[R240**

The following article has been specially written as an introduction to a series of articles by S. Butterworth which are shortly to appear.

THERE will shortly appear in E.W. & W.E. one of the most important articles it has yet published: a complete account of the methods to be used in designing low-loss coils, in which the (very difficult) mathematical work has already been done and tables and curves provided by which anyone who can do simple algebra can design the best possible coil to fulfil any given conditions. This article is by one who is among the two or three specialists in the world who really know the subject inside out, and who has spent many years on the work.

But it has been thought advisable to have a preliminary article giving a general survey of the subject, in order that there may be a closer appreciation of just what is involved, and I have therefore tried in the following notes to give a clear account of what is meant by "H.F. Resistance," particularly in connection with coils.

Firstly, why has there been so much mystery about it? For the simple reason that H.F. resistance is not so easy to measure as D.C. resistance, nor is it easy to calculate.

The simplest (though not the most accurate) method of measuring D.C. resistance is as shown in Fig. 1. We apply a voltage to an ammeter in series with the resistance, and put a voltmeter across it. Say the voltmeter shows 5.5 and the ammeter .1; and suppose that we know already that the voltmeter takes .01A at 5.5V. Then the resistance takes .09A at 5.5V, and its resistance is given by

$$R = \frac{V}{I} = \frac{5.5}{.09} = 61.1 \text{ ohms.}$$

Now suppose we try to do the same thing with a coil at radio frequency. We are at once confronted with the difficulty that the coil has reactance as well as resistance. The reactance is given by

$$X = \omega L = 2\pi f L,$$

where L is the inductance in henries
f is the frequency

$$\omega = 2\pi f.$$

Suppose that L is 100μH, and (for simplicity) we test at 377 metres, where $f = 795.8$kC, which gives $\omega = 5 \times 10^6$.

Then $X = 5 \times 10^6 \times 100 \times 10^{-6}$ (since L is in microhenries)
$= 500$ ohms.

Now such a coil would have actually a resistance of about 5 ohms, and the impedance, which is what we get by dividing volts by current, is given by

$$Z = \sqrt{R^2 + X^2} = \sqrt{25 + 250\,000} = 500.25.$$

Theoretically, if we measured Z and knew L (and hence X) we could find R. In practice, quite a large R makes so little difference in Z that the method is impracticable.

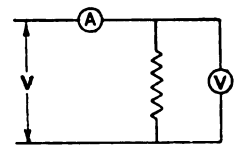

Fig. 1.

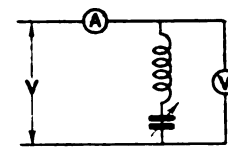

Fig. 2.

But we can avoid that difficulty. Suppose we put a condenser with the coil, as in Fig. 2, and then measure V and I when the circuit is exactly tuned. The definition of tuning is that the reactance of C is equal in amount to that of L, but *negative* in sign, so that the two cancel out and leave the resistance only. Then certainly, *if* we know what current the voltmeter takes, we can find R. But—and here comes the difficulty—we are measuring the resistance of coil plus condenser, not of the coil alone. There is also the point that in measuring this "resistance" we are actually measuring every source of power loss whatever in the coil. As will be shown later, there are several such sources of loss, and they all appear as additions to the resistance. This

Digitized by Google

should be seen clearly, and perhaps one might digress for a moment into the general idea of power loss.

If we had a perfect coil, with no resistance or other losses, and we applied to it an alternating voltage as in Fig. 3*a*, we should get in it a current as in Fig. 3*b*. The current is apparently 90° behind the voltage. Now at any instant the power being delivered to the circuit is the product of volts and current. Thus during the time 1, power is delivered, but during the time 2, there is a *negative* voltage and a *positive* current at any instant, so that negative power is being delivered to the coil, or in other words the coil itself is delivering power back to the supply. It is fairly obvious from Fig. 3 (and can easily be proved) that during time 2 the coil gives back every bit of power it took during time 1. In fact, averaged over a number of cycles, no power at all is taken, although both voltage and current are there. If, however, there is any resistance, or leakage, or dielectric loss—in fact any source of power loss at all—there will be a component of current which is not exactly 90° out of phase with the voltage, and power will be absorbed. Thus, suppose that a piece of solid matter, such as dust, was placed between the plates of a condenser, and kept charged positively, then every time the upper plate was positive this object would move towards the lower one, and *vice versa*. It takes power to move an object in this way, and if we calculate the horse-power we can convert it into watts. Now if we have a given current I passing through a resistance R, it is known that the power W expended is

$$W = I^2R,$$

so that the power used in moving our dust (being known) can be used in the equation

$$R' = \frac{W}{I^2}$$

(the inverse of the previous one), and we can say that the "equivalent resistance" thrown into the circuit by that dust is R'. In fact, any source of power absorption can be represented by some resistance in series. This equivalent resistance may not be the same for all frequencies.

As will be shown later, it is not in fact at all difficult to measure the apparent H.F. resistance of a circuit containing a coil as its main item. But to make the corrections for other losses and give a figure actually representing the resistance of the coil itself is not so easy.

It is hardly necessary for me to state that the resistance is not the same as the D.C. resistance—all my readers have got thus far; but it might be as well to state that it is not the same even as the H.F. resistance (at the same frequency) of the same wire stretched out straight.

The next question is, as to whether it is possible to calculate the difference; and the answer is; Yes—at any rate to a very close approximation, and as regards certain forms of power loss.

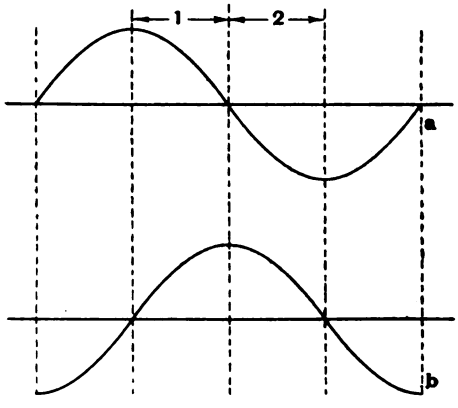

Fig. 3.

Let us try and sort out the various known losses: they are five in number, and we will deal with each of them in turn. They are:—

(A) The D.C. Resistance.
(B) The simple Skin Effect.
(C) The Proximity or Eddy Current Loss.
A, B and C together constitute the "Copper Losses."
(D) The Self-capacity Effect.
(E) The Dielectric Losses.
(These two are quite distinct.)

(A) The D.C. Resistance.

This is, as we all know, an inherent property of any wire. It is quite accurately known, may be calculated in advance by ordinary copper wire tables, and is easily measurable to high accuracy. It is independent of frequency.

Digitized by Google

(B) **The simple Skin Effect.**

This also is fairly well known by now. It may be looked at from two points of view. One is to say that alternating current in a wire is more or less forced to the surface, more and more so as the frequency goes up. Another, and in my own opinion a better way, is to say that the alternating field set up in the wire by the alternating current induces

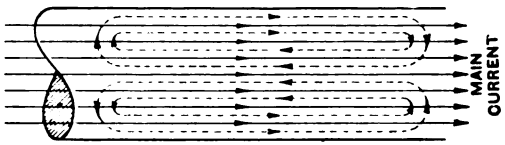

Fig. 4.

electromotive forces and sets up eddy currents in it. These are in the opposite direction to the main current in the centre of the wire, but return in the same direction at the surface, more or less as shown in Fig. 4. Hence the total current is increased at the surface and diminished at the centre. The power losses due to both currents can be added together and expressed as an increased resistance.

It will be obvious that this " Skin Effect " is itself an eddy current loss.

(C) **The Proximity Effect.**

If now we bunch several wires together, all carrying currents, then in the substance of each wire there will be, in addition to the eddy currents set up by its own field, another lot set up by the fields of the other wires. An attempt has been made in Fig. 5 to show the general sort of path followed

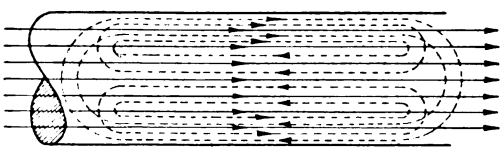

Fig. 5.

by these, and it will be seen that they are in the same direction as the main current and " skin effect " currents at one part of the surface of the wire, but in the other direction at the opposite part of the surface. In fact, when several wires carrying current act on one another, the currents flow, not only on the surface, but actually in one part of the surface only.

Again, it is found that the power losses due to these new eddy currents due to the proximity of other wires (hence " Proximity Effect ") can be calculated separately and added on.

(D) **The Self-Capacity Effect.**

As is well-known, every coil in practice has a certain capacity from turn to turn. In other words, some of the current going from one end of the coil to the other goes *via* the series of condensers formed by each turn and its neighbour. For most purposes it has been found permissible to represent this by saying that the coil behaves just as if it had a small condenser permanently connected across it as in Fig. 6. Obviously if such a coil is supplied with current from without, it is of the nature of a rejector circuit, and will offer an increased resistance on this account. What is not so clear is that this effect exists also if the coil itself is the source of voltage. The writer admits freely that he himself did not realise this till he went into the subject seriously.

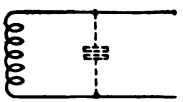

Fig. 6.

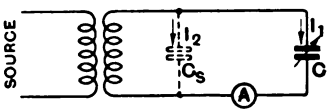

Fig. 7.

Suppose that the coil is coupled to a source, as in Fig. 7, and is tuned by C. Then the voltage set up in L sends current into C and C_s. But we can only get at and measure the current in C, so that for all practical purposes we must add to the actual resistance of L enough to bring the current down from $I_2 + I_1$ to I_1 only. Calculation shows that the correction is just the same for Figs. 6 and 7.

(E) **The Dielectric Loss.**

Further, the " condenser " C_s is not a perfect condenser. Instead of air dielectric it may have cotton or silk or enamel and wood or ebonite. Hence there are dielectric losses, and these also are shown as an addition to the resistance of the coil.

There might be added a sixth section, " Sundry Losses." But the losses in it are not really inherent in the coil, so we will

Digitized by Google

only just mention them. They include such matters as eddy current loss in pieces of metal near the coil—screws, etc.—and possibly dielectric losses between the coil and other conductors in the neighbourhood. So long as one does not succumb to the temptation to mount variable condensers within cylindrical coils to save space, these losses are not as a rule serious.

Now, what do we know as to the relative importance of these various losses, and the way they depend on the design of the coil? Quite a lot, really; although until now, unfortunately, the work has only been published in the proceedings of learned societies, and has not been brought within the range of the amateur. How widespread is the ignorance of the work done, even amongst serious workers, was brought home to the writer a few weeks ago, when reading an article by a quite well-known technical journalist in a usually well-informed contemporary. This author thought that the skin effect was known to say 1 per cent. for straight wires; and that the proximity effect for single layers might be found to 10 per cent.; but, after all, we know very little about the actual H.F. resistance of coils.

What are the facts? The skin effect is certainly known to 1 part in 3 000, for I have a table giving it to this accuracy. It could certainly be worked out more accurately still if necessary. The proximity effect calculations are more difficult. I should estimate that the amount of the effect is known to within 1 or 2 parts in 1 000 for spaced single-layer coils, 1 in 300 to 500 for spaced multilayer, and 1 or 1½ in 100 for close-wound coils. Probably the errors are actually less than this estimate.

The other two losses, which we may call the "capacity losses," have not been worked out so accurately—or at any rate to my knowledge. They both depend on the actual self-capacity. If this is known, effect (D) —the capacity effect—is known at once with complete accuracy. Effect (E) depends on the actual material of the coil former and insulation of the wire. It could probably be estimated quite closely, but only by one used to judging the quality of material. Luckily, for most conditions (E) is not important; this may surprise some readers; but I will give just two examples:—

The first is a standard plug-in coil of well-known make. The resistance of a circuit containing coil, condenser and leads was measured at H.F. The copper losses were calculated and corrected for (D) (Capacity effect).

Result at 540 metres:—

Observed *total* loss 2.5.

Calculated copper loss 2.1, or 84 per cent. of total.

Thus the dielectric losses of the coil together with all other losses in the circuit (condenser, leads, etc.) amount to only 16 per cent. of the whole.

The second example is a "Daventry" coil of 2 400μH, wound with silk-covered wire on a wood and ebonite skeleton. Low self-capacity, but no extraordinary precautions.

Resistance measured, as in previous case, in probably the best-equipped laboratory in the country; 18 ohms for the whole circuit. Measured by the writer, after allowing for the rest of the circuit, 16 ohms. Calculated copper loss, corrected for capacity effect; 15 ohms. In this case the losses in condenser, etc., were twice the dielectric loss in the coil, which latter was only 6 per cent. of the total. As will be seen later, at shorter waves this becomes more important, but still the copper losses are the greatest except at ultra-short waves.

Now as to the effect of various points of design on these losses. The most important point is that, for constant spacing between turns, the D.C. and skin losses go down as larger wire is used, while the proximity losses rapidly go up. Hence there is one diameter of wire for each coil which gives minimum loss. But frequency is also important.

Roughly speaking, it may be said that the copper losses of a given coil go up with frequency, but more slowly than the frequency itself. But the dielectric losses go up faster than the frequency, and at very short waves may become quite important. But it is a curious point that most of the devices recently adopted to get low losses — spaced winding especially — have reduced the total loss chiefly because they have brought down the copper losses!

Taking the broadcast wave-lengths as a sort of intermediate band of frequencies, we are likely to find something like the

Digitized by Google

following for a good modern coil with a condenser of .0002 or .0003 across it :—

	Per cent. of total losses.	
D.C. Resistance	15	
Skin Effect	35	
Proximity Effect	40	
Total copper losses ..		90
Capacity Effect	5	
Dielectric Loss	5	
Total Capacity Losses ..		10
		100

Since the resistance of a coil varies with frequency, and also (as regards the Capacity effect) with the proportion between self-capacity and external tuning condenser, it is obvious that it is not a "constant" of the coil. In fact, the resistance *per se* is not a fair test, for the point that governs sharp tuning, etc., is the relation between the resistance and the reactance. For this reason it is best to judge a coil by its "power factor," which is approximately equal to the resistance divided by the reactance, in fact

$$\psi = \frac{R}{2\pi f L}$$

or if we like to put L in microhenries and substitute wave-length for frequency,

$$\psi = \frac{R\lambda}{1885 L_{(\mu H)}}.$$

However, even the power factor is not constant. As a rule there is one frequency at which the coil has a better power factor than at any other, and one might give its value at this. But, since coils for wireless work are nearly always designed to tune with a condenser, it is probably best to take, as a criterion of quality, the power factor measured at such a frequency that some definite tuning capacity is required. The writer's choice is a total capacity of .0003μF, including the coil's own self-capacity.

While we are on the subject of H.F. resistance, it may be of interest to describe the actual details of measuring the H.F. resistance of a coil. As is well known, there are several methods, and the one I propose to describe is selected simply because I have found it so convenient and accurate in practice that I prefer it to the others.

I propose to describe in detail the exact way in which a measurement is made by myself, saying little about alternative methods preferred by others.

The method used is the well-known one of "Resistance Variation," and is based on the following simple theory :—

Suppose a constant voltage V to be applied to the two resistances of Fig. 8, and the resulting current to be measured. Then

$$V = I_1 (R + R_1)$$

now suppose that R_1 is short circuited.

$$V = I_0 R.$$

I_0 being naturally larger than I_1. Obviously from these two formulæ,

$$I_0 R = I_1 (R + R_1) = I_1 R + I_1 R_1$$

or

$$\frac{R}{R_1} = \frac{I_1}{I_0 - I_1}.$$

In terms of H.F. work exactly the same applies. The coil L is exactly tuned by the condenser C to the H.F. voltage induced in it by an oscillator (Fig. 9). The current is measured. Then a fixed resistance R_1 is inserted into the circuit, and the current again measured. Application of the above formula will give the resistance of the circuit.

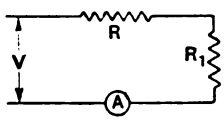

Fig. 8.

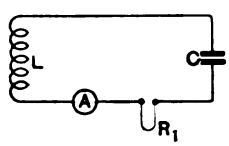

Fig. 9.

The author prefers to use a Moullin voltmeter (to measure H.F. volts across C) rather than the ammeter A. The reason is a simple one: A will actually be a thermo-junction connected to a D.C. meter. If the junction is a sensitive one, its resistance will be high: *e.g.*, a Cambridge vacuo-junction to give a visible deflection for 1mA has several ohms resistance. On the other hand, a Moullin voltmeter across C will give about ten times the sensitivity (for C = about .0003μF) and only throw in about .1 ohm of apparent series resistance. It is easy to show that for measuring small H.F. resistances the voltmeter gives much greater accuracy.

Digitized by Google

The same formula applies, as may be readily seen. Let E be the unknown E.M.F. actually set up in L, and V the volts across C.

Then

$$I_1 = \frac{E}{R + R_1}$$

$$V_1 = \frac{I_1}{\omega C}$$

so

$$E = \omega C(R + R_1)V_1$$

and with R_1 short-circuited

$$E = \omega C R V_0$$

so

$$\frac{R}{R_1} = \frac{V_1}{V_0 - V_1}.$$

Now what are the conditions for accurate measurement? We will state them first, and then discuss them.

(A) R_1 must be known accurately.
(B) V_0 and V_1 must be measured accurately.
(C) C must not vary during the test.
(D) ω (*i.e.* f) must not vary during the test.
(E) E must not vary during the test.
(F) R must not vary during the test.

(A) This sounds simpler than it is; for, of course, it is the H.F. resistance of R_1 that is required. Luckily, the values of R_1 usually needed (from 1 to 30 ohms or so) can be obtained by a short straight piece of fine wire, such as 47 S.W.G. Eureka, for which the skin effect is negligible at all ordinary radio frequencies. It is, of course, necessary that the insertion of R_1 shall not change the tuning of the circuit. For this reason one always uses a link of equal length, making it part copper and part Eureka, so that the total inductance and capacity of the circuit is not changed. One takes for R_1 the difference between the all-copper link and the Eureka one. I have already described the type I use, and reproduce the sketch herewith (Fig. 10).

(B) This involves the whole matter of the Moullin voltmeter. There is not space in this article to go into a full description of my own specimen; but in essence it is a valve biased to -4.5 volts, with 22 volts on the anode. The normal anode current is 10 micro-amps, rising to about 50 μA for 2 volts (r.m.s.) of H.F. on the grid, and to about 200 μA for 5 volts. The D.C. meter in the plate circuit gives full deflection (unshunted) for 10 μA, and shunts of 5 to 1 and 20 to 1 are provided. For reading small voltages, one dry cell is used with a potentiometer and 10 000 ohms resistance to balance out the normal 10 μA and bring the meter to zero. It then gives full deflection for about a volt; and voltages down to .2 are quite accurately readable.

(C) This is easy, provided, of course, that the insertion of R_1 does not cause any change in the total capacity of the circuit. It is most important that the tuning shall be *dead* accurate as otherwise one is inserting reactance as well as resistance.

(D) and (E) This depends on constancy of the source as a first item. If, as usual, it is a valve oscillator, try the voltage of all batteries before and after the test, for if they have fallen at all the results are not dependable.

It is important also to remember that the source must be powerful enough to give the required voltage in the coil while very weakly coupled. It must be remembered that the current in the circuit being measured changes with R_1. This change actually affects the coil of the source, and changes both its inductance and resistance: this in turn may change both the strength and the frequency of E.

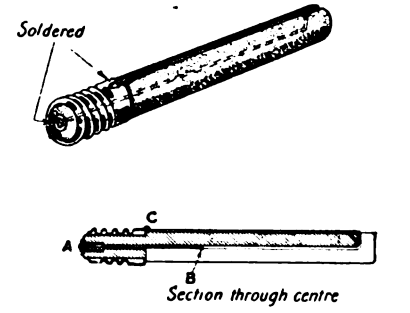

Fig. 10.

If the source coil and that being measured are never nearer than, say, three times the greatest dimension of either of them, this effect will be negligible.

(F) There are, of course, various ways in which R may change, but the most important are in the measuring instruments. If a thermo-junction is being used, its resistance will probably change as I varies. If the voltmeter is being used, its apparent resistance will change with E if the grid ever goes positive. As far as the writer's

Digitized by Google

tests have gone, his own instrument, with $4\frac{1}{2}$ volts bias, shows no change at all for less than 3 volts r.m.s. input.

Before I describe the actual routine of a test, there is one point which is very useful if much work is being done; that is the possibility of avoiding calculation by getting out a curve-sheet.

Looking at our formula for R, we have

$$R = R_1 \frac{V_1}{V_0 - V_1}$$

There are thus three variables, R_1 V_1, and Vo, which must be allowed for. But one has usually a set of fixed H.F. resistors, and for each one of these R_1 is fixed. So for each resistor there are two variables, V_1 and V_0.

But there is nothing to prevent one from starting off with a definite V_0 in every case (I use 3 volts). If we do this, then the only remaining variable is V_1, and for each resistor we can draw a curve of R against V_1. Actually, one can go farther, for every V_1 corresponds to some definite deflection of the instrument in the Moullin voltmeter, but since this might change as the valve ages, I prefer to have curves of R against V_1, which are not affected by changes in the voltmeter.

The condenser comes next—always see that there is nothing very near the coil or between it and the source, as that might set up a fictitious resistance. The condenser is a large one of good quality. The moving plates are earthed to the brass case, which is essential for any measurement work.

Close to the condenser is the valve panel of the Moullin voltmeter, the grid terminal being connected to the insulated condenser terminal by only a few inches of wire (16 S.W.G. bare wire is used). In the earthed side lead from coil to condenser is set the holder for the H.F. resistors.

The usual batteries are of course present, though not shown: the galvanometer actually in use is of the mirror type, and the scale is at the back of the bench.

The working routine is as follows: The galvanometer is shorted at the shunt box, and the voltmeter and oscillator valves switched on and left for half an hour to settle down—actually they change but little after ten minutes. Then the oscillator anode battery is disconnected while the Moullin voltmeter is "set," *i.e.*, the batteries adjusted till the deflection goes right across when unshunted. It is shunted down 20:1, and then the source is switched on and L_1

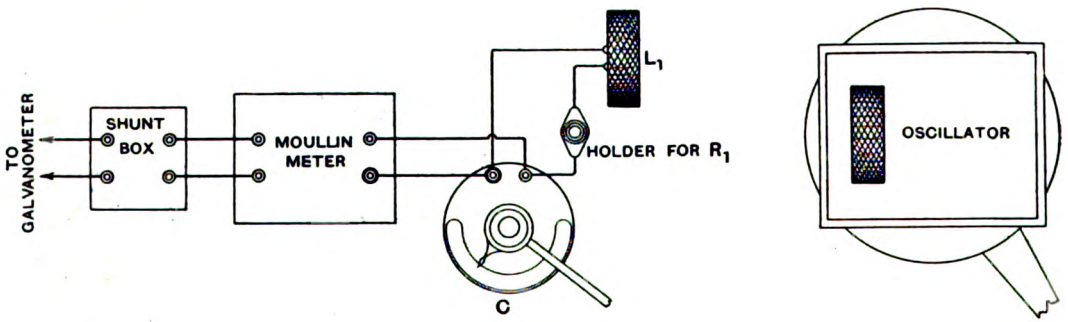

Fig. 11.

Here then in Fig. 11 is the layout used by the writer. On the right is the source, an ordinary valve wavemeter with about 60 volts on the anode. It is mounted on a wooden turntable, for reasons which will appear later.

Two or three feet from it is the coil to be tested, mounted in a single-coil holder if it is of the plug-in type. It is kept 4 to 5 inches above the bench by a block of wood or paraffin wax.

and C tuned. The value of E is adjusted till the Moullin voltmeter shows roughly 3 volts (with the copper link in at R_1). This is done by revolving the turntable: no attempt must be made to do it by adjusting the source batteries, as this would change the tuning.

Then the balancing potentiometer is adjusted till the deflection is just above zero. The galvanometer is unshunted, and C tuned very accurately. Care must be

Digitized by Google

taken here. It must be remembered that the current of say $5\mu A$ through the unshunted galvanometer is the resultant of perhaps $100\mu A$ anode current and $-95\mu A$ from the balancing battery. If the condenser is handled carelessly and the circuit put considerably out of tune, the anode current will drop perhaps to 15 or $20\mu A$, leaving an unbalanced negative current of eight times the proper load on the galvanometer, which may have distressing results.

On first trying to tune in under these conditions, the experimenter will probably be surprised at the extraordinary sharpness of tuning. Full deflection on the unshunted instrument corresponds to only a few per cent. change of anode current, and since in a good circuit 1 per cent. change of capacity will halve the anode current, it will be appreciated that one may have to adjust the condenser to a tenth of a degree to get exact tuning.

When the tuning is correct, *first shunt the galvanometer* (this rule: **shunt the galvanometer before making any change in the circuit,** *must* be observed). Then take off the balancing voltage and adjust the oscillator until the galvanometer reads the exact V_0 required. Short-circuit the galvanometer and insert an H.F. resistor instead of the copper link; bring the shunt to normal value and read V_1. Repeat with other resistors, and note against each the values of V_1. Actually, of course, one will read deflections and get the values of V_1 from the calibration curves of the Moullin voltmeter.

Then we get for each value of V_1 and R_1 a value of R, and we average them. Strictly speaking, the average is not exactly correct, and one should use the Method of Least Squares to find the best possible result; but in practice this is hardly necessary.

There are one or two alternatives to calculating the values of R in each case. One obvious one is to plot $1/V_1$ against added resistance, as in Fig. 12. Here we have taken the case of observed volts and resistances given in the table below:—

R_1 ..	0	1.20	2.13	3.73
V_1 ..	3.0	1.8	1.4	1.0

From this table we find $1/V_1$ for each value of R_1, thus:—

R_1 ..	0	1.20	2.13	3.73
$1/V_1$	0.33	0.55	0.71	1.0

and the four points of Fig. 12 are plotted. They lie well on a straight line, which, produced to cut the R scale, does so at -1.85. From this it follows that $R_0 = 1.85$.

A neater and in some ways better method, if a fair amount of work is being done, is that of Fig. 13, for the fundamental idea of which the writer is indebted to Mr. W. A. Barclay, who applied it, in E.W. & W.E. of Dec. 1925, to another purpose.

Fig. 13 should be got out permanently, on a large sheet of paper. The right-hand scale is marked in ohms, and should cover the largest R_1 in use and the largest R_0 likely to be found in the work being done. The left-hand scale is divided in reciprocals of V_1. To set it out, decide on a given

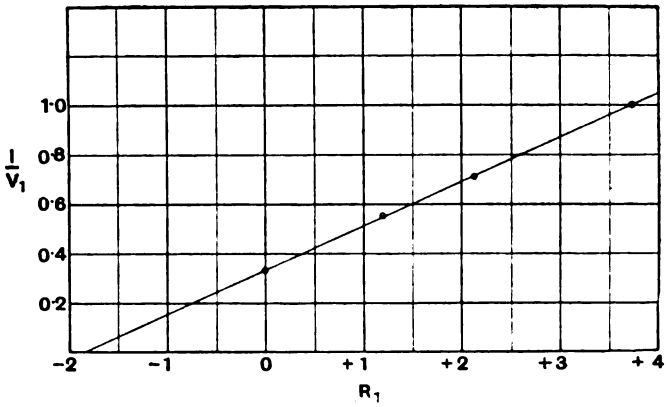

Fig. 12.

number of inches or centimetres from the point ∞ to the point 1— say Z inches. Then the point marked 2 is $Z/2$ from ∞; the point 3 is $Z/3$, etc.

This being done, take corresponding values of R_1 and V from the test results, and join the corresponding points on the diagram by light pencil lines. All these lines should cut one another at the same point, but probably (owing to experimental error) they will enclose a small polygon. Draw a line from ∞ through the centre of this, and it will cut the scale of R_0 at the value of R_0. In this case we have repeated the results

Digitized by Google

used for Fig. 12, with the same result; $R_0 = 1.85$.

If, however, a really large quantity of work is being done, it is probably best to get out a direct-reading curve for each resistor.

The following part-completed table shows how points on these curves are found: they are then plotted on the same sheet, each marked with some key-letter which is also marked on the corresponding resistor.

$$R = R_1 \frac{V_1}{V_0 - V_1}$$

$V_0 =$	3				
$V_1 =$	2.9	2.8	2.7	..	.5
$V_0 - V_1 =$	0.1	0.2	0.3	..	2.5
$\frac{V_1}{V_1 - V_1} =$	29	14	9	..	0.2
($R_1 = 1.2$)					
$R_0 =$	34.8	16.8	10.8	..	.24
($R_1 = 1.78$)					
$R_0 =$	50.8	24.9	16.0	...	.356
etc., etc.					

In this case, of course, one simply averages the results of testing a given R with several resistors. The most accurate measurements are made with a value of R_1 in the neighbourhood of half of R.

Finally, by one method or another, we get R, which is the resistance of the whole circuit. It remains to correct for incidental losses in order to get at the coil resistance.

First, as to the measuring apparatus. If this is a thermo-junction, it consists of a very fine wire, and its H.F. resistance will probably be the same as that for D.C., which is easily measured. In the case of the Moullin voltmeter, the problem is not so simple, for in its effect at various frequencies this is like a very small capacity of rather bad power factor; which means that the equivalent series resistance thrown in by it will vary as either frequency or the total capacity in circuit changes.

As far as my own tests have gone, it appears that this power factor is constant; but the resulting resistance is so small that it is not easy to measure accurately. If this is actually the case (as, in fact, one would expect) then, calling R' the equivalent series resistance added to the main circuit by the meter, we have

$$R' = \frac{M\lambda}{C^2}$$

where M is a constant of the instrument and C the total capacity of the circuit.

By rigging up two voltmeters and accurately measuring the resistance of a circuit with each while the other is first connected and then disconnected, we can find the R' of each for given values of λ and C. From this we get M, and thence can always allow for R' when making other tests.

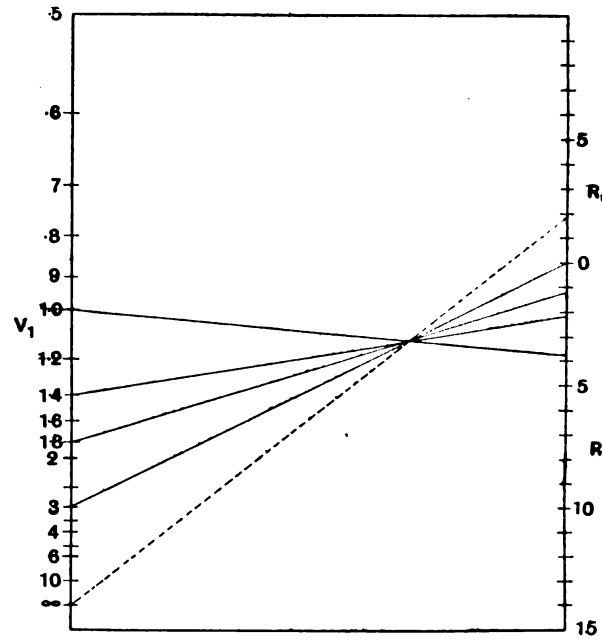

Fig. 13.

Similar allowance can be made for the loss in a coil-holder, if used. In my own case I find that at 377 metres, with the main condenser at .0003μF, the meter and the coil-holder each throw in about 0.1 ohm.

The general wiring of the test circuit can have its D.C. resistance calculated or measured, and the H.F. skin effect allowed for. In my own case the total resistance is of the order of 0.5 ohm at 377 metres (including that of the copper link used as dummy resistor). There are, of course, losses from radiation and eddy currents and dielectric loss in surrounding objects. A very rough estimate of these shows that

Digitized by Google

they should be negligible with ordinary care.

Lastly, there is the loss in the main condenser. This, unfortunately, cannot be measured in any way with the circuit as it stands. It can only be obtained (with this set-up of apparatus) by substituting for it a condenser of known loss, and measureing the resistance in each case. E.W. & W.E. possesses a condenser of which the loss has been measured at the N.P.L., and can therefore make this test on any suitable condenser. When one such test has been made on any (good) condenser, it is known that, to a first approximation, its effective series resistance is given by the same formula as above, with an experimental value for M.

Hence, if we have the "M's" for the coil-holder, voltmeter, and main condenser, we can say

$$R' = (M_1+M_2+M_3)\frac{\lambda}{C^2}.$$

If, as suggested above, all testing is done at a standard total capacity, this can be simplified still more, to

$$R' = N\lambda,$$

where

$$N = \frac{M_1+M_2+M_3}{C^2}.$$

In my own case, the complete correction in ohms, including the resistance of leads, is

$$R' = \frac{2\lambda}{1\,000} + .05 \text{ ohms},$$

which is very simple.

As we have already said, the resistance, even when corrected for the rest of the circuit, is not the pure resistance of the coil itself. Before going further, it is necessary to know the self-capacity of the coil, and its inductance will also be wanted.

If one wishes to measure the resistance at some definite capacity, one must of course know the self-capacity before measuring the resistance, so I usually begin by finding this and the inductance. This is done in the well-known way, by measuring the wave-length to which the coil tunes with various capacities, which gives both the inductance and the self-capacity. This is done with the same circuit arrangement as already shown.

If we call the *total* capacity when the resistance was measured C_T, and the self-capacity of the coil C_s, then C_v, the capacity of the condenser, is connected with the other two by

$$C_T = C_s + C_v,$$

and if the measured resistance corrected for the rest of the circuit is R', the resistance of the coil apart from self-capacity effects is

$$R_c = \left(\frac{C_v}{C_T}\right)^2 R'.$$

It is true that in any circuit in which the coil is used, this self-capacity effect will be there and must be reckoned with. But obviously it will vary with the amount of capacity in use, so we must find R_c and correct it for each case.

Finally, if we want to arrive at an opinion of the coil's merit, we should find the power factor. Assuming that we have found L, the inductance (in microhenries), and know the wave-length λ at which the resistance test was made, we have

$$\psi = \frac{R'\lambda}{1885L}.$$

Working at the wave-length given by $C_T = 0.000\,3\mu F$, a first-rate low-loss coil may give $\psi = 0.004$. A rather bad coil might have ψ as high as 0.03: the worst I have yet measured gave 0.05.

Digitized by Google

An Experimenter's Wireless Laboratory.

By Leonard A. Sayce, M.Sc., Ph.D., A.I.C., and James Taylor, M.Sc., Ph.D., A.Inst.P. **[R201**

Part II.

Alternating Current Measurements.

HITHERTO we have devoted the whole of our attention to currents which flow steadily in one direction only. When we come to apply Ohm's Law to "alternating currents" which are constantly changing their strength and direction, a number of complications arise: we must therefore consider this new aspect.

Theory.

In a circuit in which an alternating current is flowing, both the current in the circuit and the voltage across any portion of it are varying in a definite manner. Such variations may occur in an infinite number of ways, but the simplest type, and the one to which we shall confine our attention, is said to be "simple harmonic" or of "sine wave form." When the voltage across any part of a circuit carrying such a current is examined from instant to instant it is found that, at a certain time, it is zero. The voltage then increases to a maximum, or "peak" value, E_0, after which it decreases to zero again. It does not stop here, however, but increases in the opposite or negative direction, attaining a maximum negative value of E_0 and again decreasing to zero. This cycle of changes is repeated at a definite frequency, n, each repetition being of exactly the same form and executed in precisely the same time.

A simple harmonic voltage such as this can be represented very conveniently by the graph of Fig. 17 and may be expressed by the equation:—

$$V = E_0 \sin 2\pi nt \quad \ldots \quad \ldots \quad (7)$$

where V = voltage at any instant,

E_0 = maximum, or "peak," voltage (called the "amplitude" of the voltage equation),

n = number of cycles per second, or "frequency,"

and t = time that has elapsed since the commencement of the cycle.

When an alternating voltage is applied to a resistance we have, from Ohm's Law, $i = V/R$ and from equation 7—

$$i = \frac{E_0}{R} \sin 2\pi nt \quad \ldots \quad (8)$$

where i = current at any instant,
and R = resistance.

Thus the current is alternating and simple harmonic in form like the voltage.

In a general way we are not interested in the peak values of current or voltage nor in their values at any particular instant. A voltmeter or ammeter of the type we have so far considered will not give any indication when included in an alternating current circuit, because the voltage and

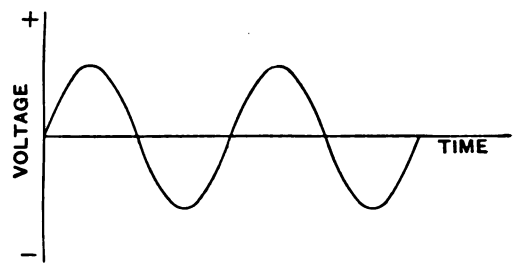

Fig. 17.

current are as often in one direction as the other, the net effect being that the instrument cannot follow the changes fast enough and, therefore, registers their algebraical mean, zero. If, however, instruments of the "hot-wire" type are used (one or two other types are also applicable), then the case is different because the heating in a wire is independent of the direction of the current in the wire and is, therefore, effected by alternating as by direct current. Since these instruments utilise the heating effect of the current, and this is proportional to the square of the current, they will measure the square root of the current squared at any time. With alternating currents, they will measure *the square root of the average*

Digitized by Google

square of the current, since the latter is constantly varying, and the same applies equally well to the measurement of alternating voltages. This measured quantity is called the "root mean square" or "virtual" value and is usually abbreviated to "R.M.S."

We may state any alternating current or voltage in three ways, for we can give either the peak, R.M.S. or the average value. In the case of the currents we are considering, however, these values are easily convertible one to the other, for—

R.M.S. value $=0.707 \times$ peak value,
Average value $=0.637 \times$ peak value.

In applying Ohm's Law to alternating currents there are several complications.

Direct currents are resisted or "impeded" only by "resistance"—the property of a conductor which results in the absorption of energy by conversion into heat. We have this property to consider in relation to alternating currents, too, and we call it "ohmic resistance." But we have two other factors which impede an alternating current.

Firstly, a coiled wire, by reason of its magnetic properties when bearing a current, opposes any change in the current through it. This opposition when defined scientifically is called the "inductance" of the wire, and at a given frequency, n, it behaves like a resistance of $2\pi nL$ ohms, where L expresses the inductance in henries.

Secondly, a condenser, of course, will not allow a direct current to pass through it, but if an alternating voltage is applied to it, the charging of one side of the condenser causes a similar charge to be repelled from the other side and a current *appears* to pass through it. Thus, in its ability virtually to conduct an alternating current, a condenser behaves like a conductor having a resistance of $1/2\pi nC$ ohms, where C expresses the capacity in farads.

When a circuit contains both inductance and capacity the two together have a combined impeding effect, or "reactance," X ohms, such that—

$$X = 2\pi nL - \frac{1}{2\pi nC} \quad \ldots \quad (9)$$

Every practical circuit, however, possesses ohmic resistance in addition, and the combined impeding effect of inductance, capacity and ohmic resistance is called the "impedance" of the circuit. If Z expresses this impedance in ohms, then :—

$$Z = \sqrt{R^2 + \left(2\pi nL - \frac{1}{2\pi nC}\right)^2} \quad (10)$$

Now, at last, we are able to apply Ohm's Law to any circuit, with the result that :—

$$I = \frac{E}{Z},$$

$$i.e., \quad I = \frac{E}{\sqrt{R^2 + \left(2\pi nL - \frac{1}{2\pi nC}\right)^2}} \quad \ldots \quad (11)$$

where I and E are expressed in R.M.S., average or peak values.

The term "alternating current" may be applied to any frequency, but is usually reserved for frequencies below about 100 cycles. A current whose frequency is between 100 cycles and 10,000 cycles is said to be of "audio" or "telephonic" frequency. A frequency greater than 10,000, or thereabouts, is said to be of "radio" or "high" frequency. For the moment, we shall confine ourselves to a consideration of the measurements associated with low frequency alternating currents and shall reserve those appertaining to the higher frequencies for subsequent treatment.

Our fundamental instrument, the microammeter, which has enabled us, so far, to make all kinds of D.C. measurements, is not applicable directly to the measurement of alternating currents. It is convenient to show, first of all, how it may be adapted to measure A.C. voltages.

Measurement of Alternating Voltages.

The Diode Voltmeter.

The following method, described more fully elsewhere,* has recently been developed for the measurement of alternating voltages over about ten volts. It can, however, be used with success down to two or three volts. Theoretically, at least, there is no upper limit to the voltages with which it will deal, and it is applicable both to low and high frequencies. The following is the general principle :—

Let us suppose that we are provided with

* Taylor, *Journ. Scientific Instruments* (1925).

Digitized by Google

a resistance R, of the order of one megohm, connected in series with the microammeter. If a direct voltage is applied to this combination the meter will show a current of about 1μA for every volt applied. If, on the other hand, the voltage is alternating the instrument will show nothing at all, for the pointer cannot respond to the rapid alternations. Let us suppose, however, that the high resistance will allow a current to pass through it *in one direction only*. If an alternating current is *now* applied to the resistance and microammeter, a current will flow only when the voltage is in the conducting direction. In other words, for exactly one-half of each cycle the resistance is infinite and for the other half it is about one megohm. Thus the meter will indicate a current of about 1μA for every two volts applied, as shown by the relation

$$\bar{I} = \tfrac{1}{2} \cdot \frac{\bar{V}}{R} \quad \ldots \quad \ldots \quad (12)$$

where $\bar{V}$ is the average voltage (arithmetical) of the A.C. applied. Further, if the A.C. voltage were replaced by a D.C. voltage applied in the conducting direction, it is obvious from Ohm's Law that the current registered would be given by the relation $I = VR$.

Thus, if our hypothetical "unilateral" resistance could be obtained, we should have a voltmeter which would measure alternating voltages as the voltmeter shown in Fig. 13 measured direct voltages. A further great advantage would be that the voltmeter could be calibrated by direct current, for, if the resistance were made so that the microammeter gave two divisions per volt on D.C., then its readings would be one division per volt (*average* volts) for A.C. Now, the R.M.S. value of an A.C. voltage bears a constant ratio to the average value for a simple harmonic wave-form, so, by suitable adjustment of R, the instrument could be made to give R.M.S. values directly.

Thanks to the thermionic valve, the "unilateral" high resistance can, to a large extent, be realised, for we can obtain our theoretical ideal fairly accurately by connecting an ordinary high resistance R in series with a diode V (*e.g.*, an ordinary triode valve with grid connected to its plate). This arrangement is shown in Fig. 18, where the voltage to be measured is applied across the terminals T_1 and T_2. As a rule, a small current is indicated even when T_1 and T_2 are short-circuited. This is due to the pressure of the electrons given off by the filament and may be suppressed entirely

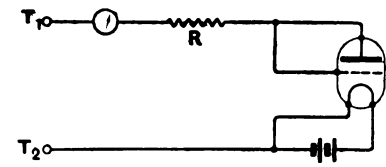

Fig. 18.

if the slight complication shown in Fig. 19(*a*) is made and the potentiometer is adjusted with T_1 and T_2 shorted until the current is reduced to zero. An even simpler method is to obtain the required potential directly from the filament lighting battery, Fig. 19(*b*).

If the resistance R is high, then the variation of the resistance of the valve is negligibly small compared with it and the instrument has a "straight-line calibration." The lower limit for linear calibration is reached when R becomes so small that the resistance of the valve which, of course,

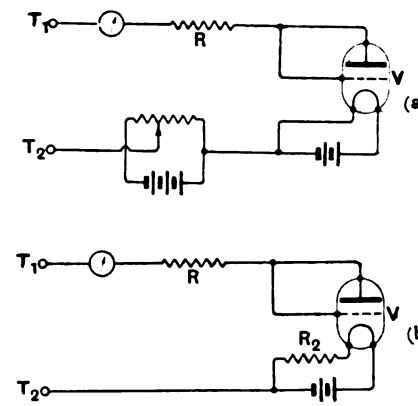

Fig. 19.

does *not* obey Ohm's Law, is no longer negligible. The A.C. voltage scale is linear, however, down to a voltage of about ten and the D.C.-to-A.C. ratio is almost constant down to as low a voltage as two or three volts.

An "A.C. Voltage Converter," made in

Digitized by Google

accordance with the above principles, is shown in the photograph of Fig. 20 and the diagram of Fig. 21. A "V-24" valve is used by reason of its compactness, but it must be emphasised that the instrument is practically independent of the type of valve used. Whether it be an "R" valve, dull-

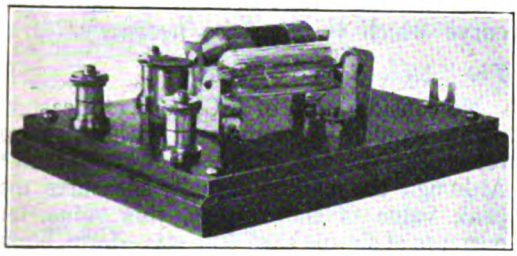

Fig. 20.

emitter or power valve makes little difference when R (Fig. 18) is a megohm or more. We recommend, however, that this and other instruments to be described be adapted for a filament voltage supply of six volts. A six-volt accumulator is to be found in the equipment of almost every experimenter and we suggest that it should be wired up to several wall-plugs on the "wireless" bench. Each of the instruments, whether voltmeter, oscillator or what not, can then be "plugged-in" without delay by equipping them with a permanent twin lead and suitable plugs.

In the present instrument, a resistance,

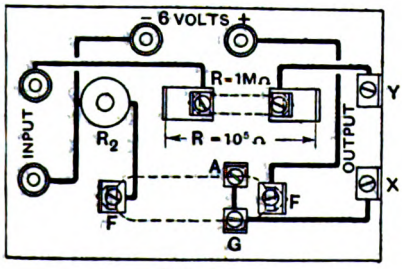

Fig. 21.

R_2, is included in the filament circuit, both to limit the current through the valve and to counteract the effect of the electron pressure. This resistance is wound with No. 26 D.C.C. Eureka wire, and is adjusted until, with the input terminals short-circuited, the reading of the microammeter connected to the "hooks" X and Y (Fig. 21) is *just* reduced to zero.

For high voltage ranges where it is a megohm or more, the high resistance, R, is rather a problem. It must be constant in value and both expense and space prohibit a wire-wound resistance. Whilst a really *constant* high resistance is difficult to make, it is still more difficult to obtain such a high resistance which shall be both constant and of an accurately pre-determined value. We have, therefore, compromised by using grid-leaks and "anode resistances" of the cartridge type and have found them fairly constant in value, for, of course, the current through them is never more than 120μA. The range of the instrument can be changed very easily by clipping-in a resistance of another value. In the instrument shown in the photograph the clips are made to take either a grid-leak or an anode resistance. The latter was in use when the photograph was taken. The nominal values of these resistances cannot be taken as correct and so it is always necessary to calibrate the instrument with its own special resistance.

μA (R)	D.C. Volts. (v)	~R.M.S. Volts. (=2.22v)
115.0	11.75	26.1
107.2	11.0	24.4
97.0	10.0	22.2
86.4	9.0	20.0
75.4	8.0	17.8
63.7	7.0	15.5
52.4	6.0	13.3
41.0	5.0	11.1
30.5	4.0	8.9
20.8	3.0	6.7
15.5	2.5	5.6
11.0	2.0	4.4
7.3	1.5	3.3
3.8	1.0	2.2
1.1	0.5	1.1

Fig. 22.

To perform this calibration, a gradually increasing D.C. voltage, in the conducting direction, is applied to the instrument from a battery whose voltage has previously been measured in the manner already described (Fig. 13). The reading, R, of the microammeter, corresponding to each voltage V, is noted and the results are tabulated as shown in the table of Fig. 22. Now, the R.M.S. A.C. voltage that produces a given current through the microammeter is 2.22 times greater than the D.C. voltage that produces this effect. Thus, the third column of Fig. 22 is obtained by multiplying the

Digitized by Google

figures in the second column by the factor 2.22. Finally, the first and third columns are plotted as a graph, as shown in Fig. 23.

It may not be out of place to mention here that in drawing graphs it is a recognised convention that the *cause* of the change be shown along the horizontal and the *effect*

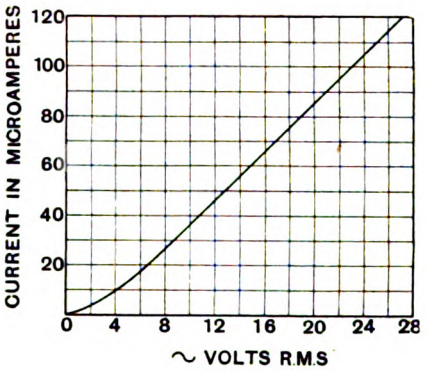

Fig. 23.

of the change along the vertical axis. Thus in this case the voltage is horizontal and the current vertical. It would save much confusion if this convention were followed invariably by all writers.

The graph of Fig. 23 is the calibration-curve of the instrument and, in the ordinary way, we should have to refer to this curve every time the voltmeter is used. This very cumbersome procedure can however be avoided by a very simple alternative, an alternative which can be adopted in any

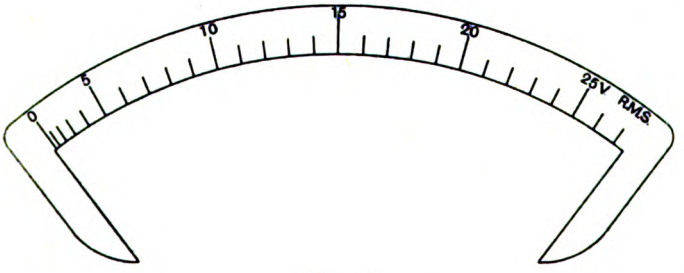

Fig. 24.

case where the microammeter scale is not "direct-reading." Cut out a piece of stout paste-board to fit the glass-covered opening of the microammeter case, shaping it so that only the scale of the instrument is covered. Then mark upon this card the A.C. voltages (column 3, Fig. 22) corresponding to the various currents (column 1) as indicated upon the instrument scale. An example of the result is shown in Fig. 24. This plan of making supplementary scales for the microammeter can be applied without loss of accuracy to any instrument having a "parallax" mirror and it avoids entirely the tiresome reference to a calibration curve which is otherwise necessary.

The "Slide-Back" Method.

No consideration of A.C. voltage measurement would be complete without some reference to the "slide-back" method.* Although the method actually measures the peak value of the voltage, this value, for currents of simple harmonic wave-form, bears a constant relationship to the R.M.S. value, and can thus readily be calculated. Further, the method can be applied both to low

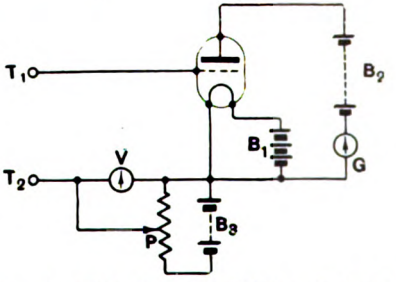

Fig. 25. *An Experimenter's Wireless Laboratory.*

frequency and to high frequency measurements. Its principle is shown in the circuit of Fig. 25.

The circuit consists simply of a triode valve, a galvanometer G, and battery B_2, in the anode circuit and a potentiometer P and battery B_3 used for varying the grid potential. The latter is measured by the voltmeter V.

The measurement of a peak voltage involves two operations: Firstly, with terminals T_1 and T_2 shorted, the negative bias upon the grid is increased by means of the potentiometer until the anode current, as shown by G, is *just* reduced to zero. The

* *Radio Review* (1921), (2303).

Digitized by Google

grid bias V_1, required to do this, is noted. Secondly, the link between T_1 and T_2 is removed and the A.C. voltage to be measured is applied to these terminals. An anode current is again indicated by the galvanometer and the potentiometer is again adjusted until the current in the anode circuit is just reduced to zero. If the reading of the voltmeter is now V_2 the peak value of the A.C. voltage is $V_2—V_1$. The R.M.S. value is, of course, $0.707 \times (V_2—V_1)$.

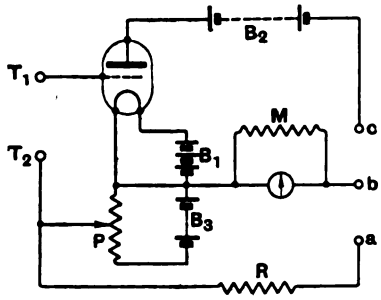

Fig. 26.

In our present position, with only one measuring instrument, we must make the latter serve both as the voltmeter V and as the galvanometer G, and this can be effected by the experimental arrangement shown in Fig. 26, where B_1 is the filament heating battery, B_2 the anode battery and B_3 the potentiometer battery across the ends of the potentiometer P. The latter may be one of the many circular potentiometers upon the market having a resistance of 300 to 400 ohms. R is the 10,000 ohm resistance (Fig. 9), and one side of the change-over switch (Fig. 7) is used as the single-pole double-throw switch, *abc*. Whether the microammeter is shunted or not depends upon the peak voltage to be measured.

The slide-back method has its limitations. It requires three batteries of which B_3 must have an E.M.F. larger than the peak voltage to be measured. Reference to the characteristic curve of a triode valve will show another disadvantage; the curve flattens out so very much as it approaches the voltage axis that it is difficult to tell the voltage at which the anode current has really been suppressed. Notwithstanding these drawbacks, however, the slide-back method can be of great service, particularly in the measurement of small voltages.

The Moullin Voltmeter.

In considering the diode voltmeter described above, we saw how the "unilateral conductivity" of the anode-filament path could be applied to measure alternating voltages. When such voltages are small, however, we can obtain very much greater sensitivity by using a *triode* valve and applying the voltages between grid and filament.

There are two ways in which alternating voltages between grid and filament may cause corresponding changes in the mean conductivity of the anode-filament circuit. These methods are known respectively as "anode rectification" and "leaky grid" rectification, and both have been applied very successfully by Moullin to our present problem.

The Leaky Grid Type.—The circuit for this form of Moullin voltmeter is shown in Fig. 27. The A.C. voltage to be measured is applied to the terminals T_1 and T_2 and, owing to the unilateral conductivity of the grid-filament circuit, the grid becomes progressively more and more negative, with the result that the plate current, as shown by the measuring instrument M, is correspondingly reduced. It is inherent in the method that a certain amount of energy

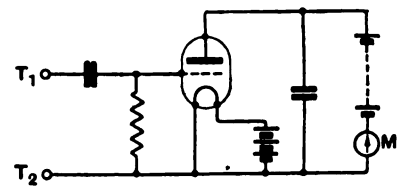

Fig. 27.

must be withdrawn from the input circuit. This method is more sensitive than that dependent upon anode rectification: sensitivity is, however, generally required when the energy abstracted can least be spared. For this reason this type of Moullin voltmeter will not be described at great length.

The Anode Rectification Type.—This type is shown in Fig. 28 and, as before, the voltage is applied between the terminals T_1 and T_2. A battery B_3 is provided, however, of such a value that, when T_1 and T_2 are short-circuited, the anode current shown by M is nearly zero. If now the link between T_1 and T_2 is withdrawn and an A.C. voltage is applied in its place, every

Digitized by Google

positive impulse upon the grid causes a big increase in the anode current through M but every negative impulse causes a comparatively small decrease in the normal current. Thus the A.C. voltage can be measured by the increase in the reading of M.

Two conditions are essential to the satisfactory application of this method:—

1. There must be a conducting path between T_1 and T_2 to convey the bias from B_3 to the grid. This condition is almost invariably complied with in wireless measurements. (When it is impossible to do this we are forced to use the "leaky grid" type).

2. The value of B_3 must be greater than the peak value of the highest voltage to be measured. If this condition is observed then the voltmeter exerts very little effect upon the circuit to which it is applied, for the grid is never allowed to become positive and grid current is never allowed to flow. The small amount of energy that is absorbed may be reduced still further by connecting a condenser C_1, of fairly large value, say, .003μF, across the battery and measuring instrument.

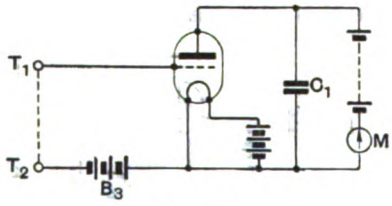

Fig. 28.

In designing a practical form of Moullin voltmeter, we shall assume that the characteristics of the valve itself remain constant. It will be observed that the instrument depends for its constancy of calibration upon the constancy of the three batteries used respectively, for biasing the grid, heating the filament and furnishing the anode current. The uncertainty due to these three variables may, however, be very largely removed by using the circuit shown in Fig. 29. Here V is a valve requiring 2 volts to heat its filament and B_1 is a 6-volt accumulator, whose voltage is not subject to considerable variations. Thus, when R is adjusted so that the filament of V is properly heated, the lower end of R is four volts more negative than the negative end of the filament. This potential is transferred as an automatic grid bias by the metallic connection between T_1 and T_2.

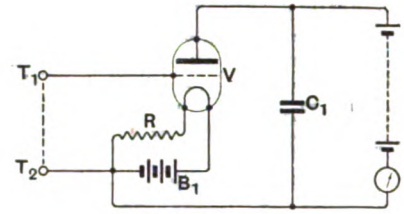

Fig. 29.

It is this grid bias that fixes the upper limit of the A.C. voltage that can be measured. Under the above circumstances, its peak value must not exceed four volts, or, in other words, its R.M.S. value must not exceed 4×0.707, say, 2.8 volts.

The only other variable quantity affecting the calibration of the voltmeter is the anode voltage. Seeing that we require the greatest possible sensitivity at low A.C. voltages, the anode potential must be so chosen that we are working from the point on the grid voltage-anode current curve at which the maximum change of curvature occurs. With a certain valve this point was found to correspond to an anode current of 8μA. The anode voltage was decided, therefore, by short-circuiting T_1 and T_2 and varying the H.T. battery until a current of 8μA was shown. Thus 8μA corresponded to zero A.C. volts and the H.T. battery was used as a kind of "zero adjustment."

The instrument may be made very conveniently as an attachment for the micro-

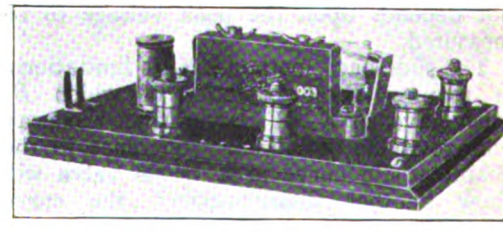

Fig. 30.

ammeter, and can then take the form shown in the photograph Fig. 30, of which Fig. 31 is the circuit diagram. The ebonite baseboard, measuring $5\frac{1}{4}$ in. $\times$ 4 in. $\times$ $\frac{3}{16}$ in.,

Digitized by Google

is provided with six terminals—for batteries and input respectively—and two slotted brass strips by which it is connected to the microammeter. The valve used in this

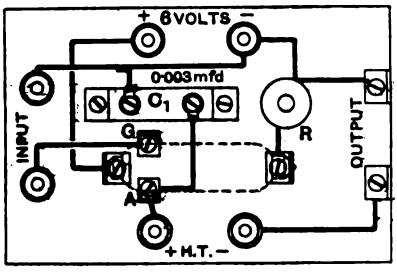

Fig. 31.

actual instrument is the "D.E.V." Although really intended for 3 volts, it works quite satisfactorily on 2 volts and is then, of course, very unlikely to change or "burn out." It is probable that the "D.E.Q." valve would be still more suitable as it is especially made for "anode rectification."

The resistance *R* is wound upon the small bobbin shown in Fig. 30. and consists of about 4 yds. of No. 30 S.W.G. D.C.C. "Eureka" wire. Its exact length is not critical and is determined in the following manner: Connect the filament of the valve in series with the microammeter, shunted for 0-1.2A, and a 2-*volt* accumulator, and measure the current. Then connect the meter in series with a 4-*volt* accumulator and about 5 yds. of the above resistance wire. Finally, shorten the resistance wire until the current through the meter is the same as before. When the resistance and valve are mounted in series in the instrument and six volts are applied to them, there will be a drop of 4 volts across the resistance and 2 volts across the filament.

The Moullin voltmeter, unlike the Taylor diode voltmeter, has no simple proportionality between its A.C. and D.C. calibration. In the next article, therefore, we shall show several methods of affecting this calibration.

BRITISH WIRELESS EXPORTS.

During 1925 the British wireless industry exported goods to the value of £1,335,087, according to interesting figures given in *The Wireless Trader*, which justly remarks that a total annual figure of one and a third millions is one that an industry scarcely three years old can view with satisfaction.

The highest figures relate to Japan, to which goods were exported to a value of over £200,000. Australia purchased an almost equal quantity. European countries appearing high in the list are Holland, Spain, Italy and Denmark.

BINDING CASE AND INDEX.

Binding cases and indexes are now ready for the volumes of E.W. & W.E. and *The Wireless World*, completed in December last.

For E.W. & W.E. the index (separate) is 7d. post free; binding case (separate) 3/3 post free, or together 3/9 post free.

The cost of binding case and index for *The Wireless World* is 2/10 post free. These are obtainable from the publishers, Iliffe & Sons, Ltd., Dorset House, Tudor Street, London, E.C.4.

Digitized by Google

Loud-Speakers. [R376·3

A LECTURE delivered by N. W. McLACHLAN, D.Sc., M.I.E.E., before the Radio Society of Great Britain, on 27th January, 1926.

I HAVE a very definite reason, I think, for dealing with the subject of loud-speakers. About eighteen months ago I had three loud-speakers of the horn type and their musical performance seemed so unsatisfactory that I thought it was about time we tried to get something better. In general the question of loud-speakers is more one of design and utilising known principles than of trying to get some entirely novel instrument working, say, on a new effect. You have first to get the effect before you can design the apparatus. Sometimes you are lucky and you discover a new effect and can apply it. So far as loud-speakers are concerned, up to the present there are no new effects that one can employ, so that it is necessary to exercise one's ingenuity and design something out of known principles. The subject of loud-speakers is now so wide that it would take a course of twelve lectures to cover the whole of the ground, Therefore, the only thing I can do is to touch on the more salient points.

When I say that a diaphragm loud-speaker is better than a horn loud-speaker, there are some who may not agree, but there are scientific reasons for such a statement. Apart from scientific reasons, one has only to hear the two types of loud-speaker side by side to appreciate the difference. Of course, the amplifier plays a very important part in the procedure and in designing loud-speakers I have always endeavoured to do so in such a manner that in the average broadcast transmission—I do not mean a landline transmission—the input to the loud-speaker is, as far as possible, uniform at all frequencies.

The prime mover of the diaphragm loud-speaker is in general a vibrating reed which is polarised by a permanent magnet. If we take the diaphragm type of loud-speaker and assume that a reed or something working on the same principle is used, the reed is a tuned system which has got a definite resonance frequency, and unless something is added which makes the system aperiodic there is going to be resonance, and in general, if sufficient damping is added to get aperiodicity, the result is a loss in intensity. In fact, the intensity is so weak that the loud-speaker is of little account.

It is not possible to eliminate entirely the resonance of the reed, and a certain amount of acoustic colouration must be tolerated.

Now we come to the diaphragm. It does not matter what diaphragm is used, there will be resonance. It will have, in general, a fundamental frequency of vibration, although it may not necessarily be very pronounced. This will be accompanied by a series of overtones which may be two, three, four or five times the frequency. They may not be exactly three or four times, or any even number, it may be 1.78, for instance, and that makes the resonance more complicated. The diaphragm, therefore, is another resonance system and if you pitch the resonance of the diaphragm lower down than the reed another curve is obtained. (See Fig. 1.)

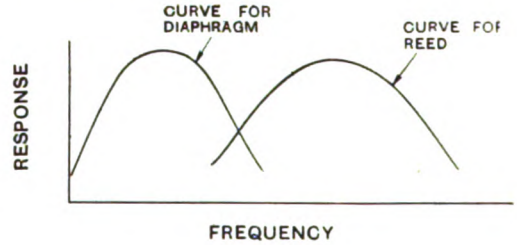

Fig. 1.

Then, if we consider the fundamental vibrations for a moment, when the diaphragm is actuated by a reed, there is a composite vibrating system as with two tuned circuits tightly coupled. When two electrical circuits are closely coupled, the resonance curve has two distinct humps, and that is approximately the condition which obtains in a loud-speaker. Taking a rough curve of response and frequency for any diaphragm

Digitized by Google

type of loud-speaker, we get the result shown in Fig. 2.

We have omitted the overtones of the diaphragm and the reed. The effect of these is to superimpose little ripples on the main curves and the result is a composite curve in which there are a series of resonances. There is no use in attempting to evade the

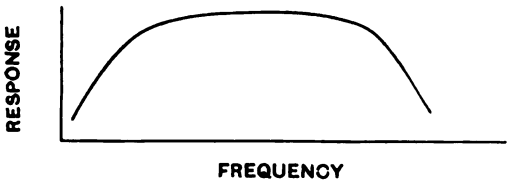

Fig. 2.

fact that the system has resonances, although some listeners will say the reproduction is perfect, we know quite well that it is not. If you listen carefully, resonances or acoustic colouration can be detected. If you cannot detect them, then make it loud enough and you will. When the resonance occurs in the bass range—70 to 200 cycles—there will be an indistinctness, since the damping of the lower frequencies is less than that of the higher frequencies.

The essence of the argument is as follows: When using tunable pieces of apparatus, such as reeds and diaphragms, the result is a composite curve with resonances and with a characteristic which shows a cut off at the bottom and at the top of the acoustic register. In other words part of the notes in the lower register and part of the notes in the upper register are cut off. If the lower register is full the upper register suffers, and vice versa. Therefore it is essential to compromise and strike the resonance in such a position that an average is secured. Although the resonance is still there it is sometimes difficult to detect unless a standard of comparison is available in which resonance is almost entirely absent.

Now let us consider the effect of the size of the diaphragm. If we imagine the diaphragm to be freely supported at the edge, as in the case of the small cone shown in Fig. 3, it is not easy to predict the performance immediately from theory, but when you have conducted a series of experiments you know exactly what will happen. There is going to be no bass, and the reason is two-fold. If there were no cone at all, the excursion of the reed would never exceed a certain amount, *i.e.*, the motion is limited. It is obviously determined by the design of the movement and the thickness of the reed. If a small cone is used the reed is underloaded, and since the excursions at low frequencies are limited and, furthermore, since the projected area is very small, the amount of air displaced is also small. Thus the low frequencies are cut off.. If the size of the cone is gradually increased there is a greater purchase on the air and a greater intensity at low frequencies. In other words the impedance of the cone is matched to the impedance of the reed, so that the low frequencies are radiated. When the vibrations of the reed are communicated to the cone, they travel down it with a definite velocity. Consider a cone 12 inches in projected diameter at a low frequency. The velocity of propagation down the cone (which is tolerably stiff), is so high compared with the frequency that practically the whole cone can be considered to move simultaneously. At high frequencies, when

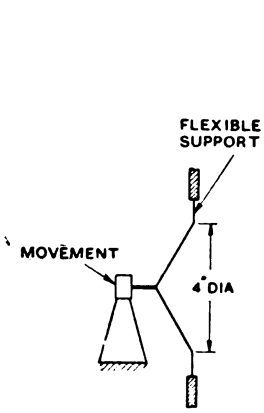

Fig. 3.

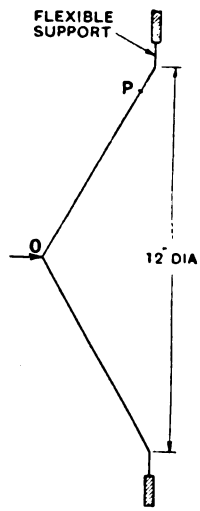

Fig. 4.

the to-and-fro motion of the reed is very rapid compared with the velocity of propagation, the disturbance travels down the cone with a definite velocity. The result is a phrase difference between the motion of the points *O* and *P* in Fig. 4. Therefore at high frequencies with a large cone, in

Digitized by Google

all probability, the vortex will be moving in one direction, whilst the periphery will be moving in the opposite direction. Work is being done on the air in two opposite directions and there is a reduction in output. Then, again, there is a transmission loss; due to the energy being transmitted down the cone; and the higher the frequency the greater the loss. There are clearly three reasons for the cut off at high frequencies, first, the tunability of the reed; second, the fact that the velocity of propagation down the cone is relatively low, and third, the large attenuation loss due to energy being propagated down the cone.

Now we come to the bass register. I have indicated that a large cone is required, but what should be the size? That can only be determined by experiment. From 12 to 18 inches is a good size. Suppose a very large cone is used it will have a large inertia and a large proportion of available energy will be expended in pushing it backwards and forwards. There will be too much energy radiated at low frequencies and too little at the high frequencies. Thus it is essential to limit the diameter of the cone in order to get an adequate upper register.

If the cone could be replaced by a disc of sufficient stiffness, *i.e.*, suppose we could find a piece of paper a thousand times as stiff as a piece of notepaper and put it into the form of a disc, 12 to 15 inches in diameter, with a reed on it, it would act quite well. It is only a question of stiffness and of obtaining a high ratio of elasticity to mass. This means a large velocity of propagation and the higher the velocity of propagation the greater the portion of the disc which moves at the high frequencies.

There is another aspect of the question relating to the lower frequencies. In 1868, the late Lord Rayleigh carried out an extremely interesting experiment in which he showed that by preventing the circulation of air between the two sides of a vibrating tuning fork the sound from the fork was increased in intensity (see Fig. 5). Professor Stokes carried out a series of mathematical researches which he applied to various problems and the late Lord Rayleigh's experiments were based on the investigations of the late Professor Stokes.

Professor Stokes calculated, in connection with middle C on the piano, that if the air in front of the wire moved in a thin strip, *i.e.*, if there was no lateral motion at all, and the motion of the air were entirely in the plane of the wire, the energy of the unaided wire would be 40,000 times as great as it actually is. That shows the great effect of preventing lateral motion of the air. You have an example of that in a bell where the inside and the outside will be at a different pressure and if the circulation of air is prevented the radiation from the bell will be increased.

Referring again to Fig. 5, suppose one prong of the fork is moving toward *B*, the pressure of the air at *B* will be increased above the normal atmospheric pressure, and clearly the pressure at *A* will be decreased. We have, therefore, at two points in the air, which are very near together, a quite definite difference of pressure, with the consequence that air flows from *B* to *A*. What Lord Rayleigh did was to put a sheet of cardboard in such a position as to prevent the circulation and he found that the intensity of the sound from the tuning fork was enhanced. This principle has been incorporated in modern loud-speakers of the diaphragm type by Siemens and Halske in Germany, the General Electric Co. in America, and I have done the same in this country.

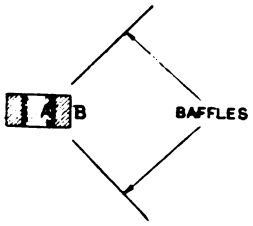

Fig. 5.

There is another way of obtaining the same result. It is not necessary to have a large baffle, since a box can be used.

Fig. 6 shows the principle of preventing lateral motion of the air between two sides of a diaphragm, applied to a cone loudspeaker. The reed is connected rigidly to the point of the cone. The cone is supported by rubber or, as I prefer, cloth. As a matter of fact, I use stockinette because it is good and stretches. It does not matter whether wood or cardboard is used for the baffle, although cardboard is useful for experimental purposes. The effect, therefore, is to enhance the amount of sound radiated, but it is most pronounced in the bass, and the reason is very simple. Consider

Digitized by Google

a pressure wave travelling round from the back to the front of a conical diaphragm (Fig. 7), it travels, of course, at the velocity of a pressure wave of air of the velocity of sound, 1,100 ft. per second. Consider the cone to be moving very rapidly. If it moves

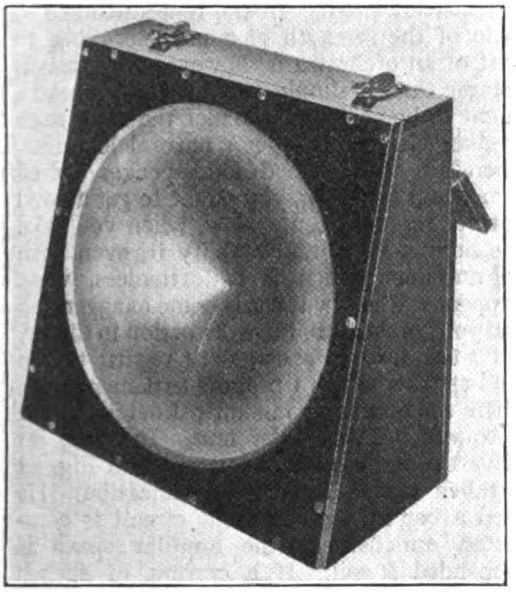

Fig. 6.

forward a positive pressure is created and, of course, the pressure wave immediately starts travelling round to the back. If the frequency is very high the cone has moved backwards and created a negative pressure wave before the pressure wave from the front has had time to get round to the back. Therefore, at high frequencies, the effect of preventing circulation of the air is small. At a low frequency of vibration you can quite see that the velocity with which the air travels round is very considerable compared with the movement of the diaphragm and therefore the prevention of lateral motion enhances the radiation in a remarkable degree. The larger the baffle the greater the radiation on the very low tones.

The next point I wish to discuss is the distribution of sound from a diaphragm. It is well known that a horn focuses sound. Take a horn loud-speaker into the open, and walk round it. The intensity is much greater in front than at the side, and very much weaker at the back. The same result is obtained in a somewhat modified degree with any cone type of loud-speaker.

Suppose we consider a cone as shown in Fig. 8 moving backwards and forwards in accordance with speech and musical frequencies. We will assume that the air cannot get round to the back. We can imagine that the cone is built into a hole in the wall, so that the radiation from the two sides are quite separate. When the cone moves forward, in the absence of lateral motion of the air, there would be a cylindrical column set into vibration. There would be a beam effect, and anyone situated at the point *P* would hear nothing, but, fortunately in practice, the air spreads out laterally. If you walk round it, when a note of 100 cycles is sounded, the intensity will be tolerably uniform all the way round, *i.e.*, if you walk round in a semi-circle. That is due to the air spreading out comparatively uniformly at low frequencies. But suppose the frequency is raised to 2,000 per second, what happens then? The cone moves backwards and forwards 2,000 times per second. There is lateral movement of the air but the motion of the cone is so rapid that the air has little time to spread out before the cone is moving in the opposite direction. Therefore the sound is projected out in the form of a beam. The radiation at various frequencies is portrayed roughly in Fig. 9. As a matter of fact, in an actual room you will find that the quality of the sound varies as you go round the loud-speaker, because

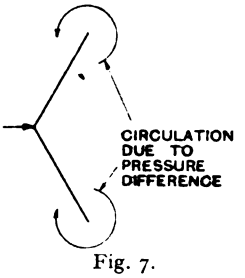

Fig. 7.

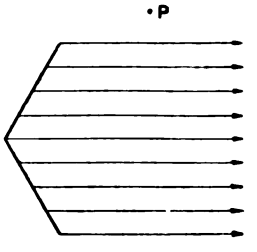

Fig. 8.

at the side very many of the high tones have disappeared, but at the front they are felt in full force. With a cone loud-speaker in the open, where there are no reflections, the beam effect is more pronounced.

The next point is the amplifier. Loud-speakers should be designed to work on a

Digitized by Google

circuit giving as far as possible uniform amplification. The audio-frequency amplifier I use has a practically uniform scale, and that, I think, is the thing to be aimed at, but there are conditions, such as distant listening, which have to be considered. If, for example, at Chelmsford three tuned anode circuits are used the effect is to cut off the high frequencies. Under this condition it is a great advantage to have a transformer in the amplifier designed to yield a rising characteristic in the upper frequencies and to that end I have utilised leakage which is sometimes regarded as an undesirable quality in a transformer.*

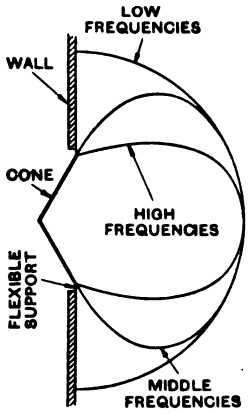

Fig. 9.

In many cases the high frequencies are not regained by the transformer and one has to be careful not to give judgment on a loud-speaker until the complete amplifier curve is known.

The next point to be considered is the loudness level. If we listen to an orchestra or a military band, and we are very near to it, the radiation is intense. One's ears get saturated; the effect is not exactly comfortable. At a short distance away one begins to resolve the band into its component instruments, so to speak, and you get a certain degree of loudness. You will notice that if you are comfortably near a band, you find the low tones are quite powerful. The energy, in music or speech, is carried in the low tones, and if you walk away from the band the low tones appear to get less and less. They get gradually less until finally, when you are 100 or 200 yards away, they are relatively weak. The human ear is more sensitive to frequencies in the upper register than in the lower register as indicated by the curve of Fig. 10. For equal threshold audibility the pressure on the ear is 50 times as great at 100 cycles as it is at 1,000 cycles, and that is a very important thing. In an ordinary household loud-speaker you have to expect a certain reduction in the bass register due to the reduction in the natural loudness of the music. On the other hand, when we come to human speech, we know that a man cannot speak as loud as an orchestra, hence the intensity is relatively small. In the reproduction the ratio of the strength of a man speaking to that of an orchestra is, however, very much greater than it should be, *i.e.*, the orchestra ought to be very much louder than the man speaking in order to get a natural loudness. Therefore, on a good loud-speaker, when someone is speaking, you ought to get a good natural reproduction. Now, when you take the human voice and amplify it, even with an amplifier which is distortionless, what happens? The low tones become exaggerated and you get pressure wave distortion in the air.

I want now to speak with regard to the loud-speaker which I propose to demonstrate. There are one or two historical details about it to which I will refer first. In 1898, Sir Oliver Lodge took out a patent and Fig. 11 is taken from his patent specification. He used a bar magnet, and the circuit is completed outside. In the annular space is suspended a coil. If a current of speech frequency traverses the coil, the latter will move up and down. Sir Oliver Lodge brought out a loud-speaker apparatus functioning in this manner. The principle has been applied to the Magnavox loud-speaker.

The photographs of Figs. 12 and 13 show my modern adaptation of that principle. It is the apparatus I have on the table. We have a magnet with a central pin, in

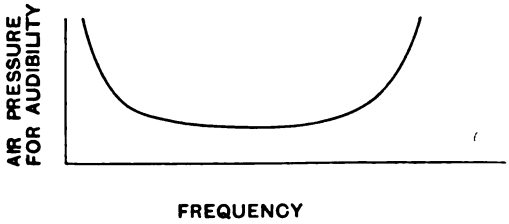

Fig. 10.

the same way as before, the magnet being energised by a coil as in the Magnavox. In this case the magnetising current is obtained from the 200-volt supply because it is more convenient. When this loud-speaker is carried about from place to place, a

* See N. W. McLachlan, *Wireless World and Radio Review*, 13th, 20th, 27th January, 1926.

Digitized by Google

magnetising coil is used which can be energised from a 6-volt battery. The moving coil is fixed to a paper cone. The paper is fairly stiff and is treated with aeroplane dope to render it weatherproof. The cone is supported at its periphery by stockinette merely to prevent it getting away. Rubber could also be used, but it is objectionable, especially in the tropics. The photographs show the operating unit of the loud-speaker.

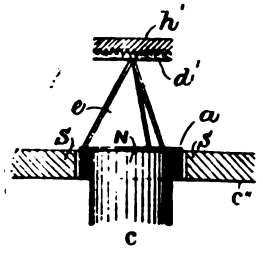

Fig. 11.

The cradle part of the apparatus which slides into the runners can clearly be seen. The box performs two functions. In the first place, it is a receptable for the cradle, and secondly, it acts as a baffle. The door at the back can be open or shut. Generally, for household work, it is necessary to have the door at the back slightly open, otherwise box resonance occurs. For public address purposes it is essential that the radiation from the diaphragm should not get back to the microphone, and therefore it is advisable to design the loud-speaker to give a partial beam effect, not a very pronounced effect, but sufficient to prevent the speaker reacting back on the microphone and causing a howl. In this case the rear of the box can be closed. A front view of the instrument is shown in Fig. 14.

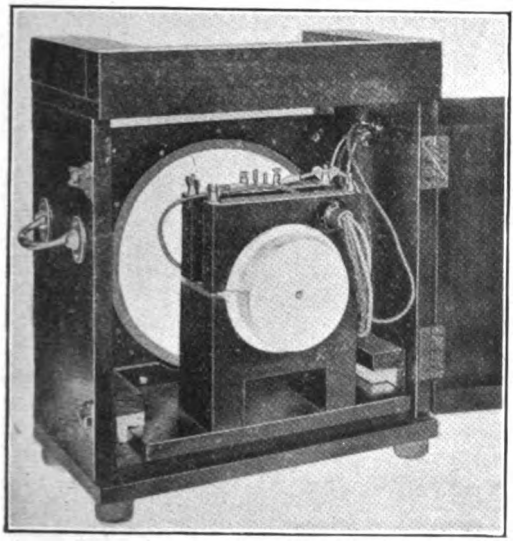
Fig. 12.

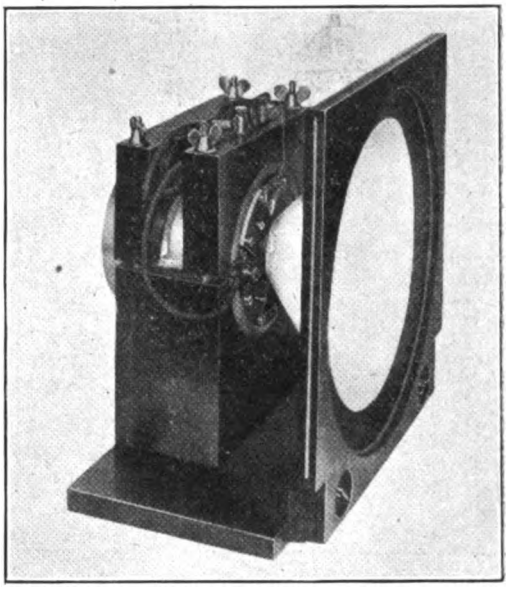
Fig. 13.

There is a hinged door with a large nickelled fine-mesh copper gauze window in front of the conical diaphragm. This serves to protect the diaphragm when the loud-speaker is used out of doors. For indoor work the cradle portion, complete with diaphragm, is removed from the box and placed in the felted runners on the top of the box. To prevent circulation of the air between the two sides of the diaphragm a large board or baffle of multi-ply wood is fixed on the four studs at the front of the box, the result being as shown in Fig. 15. This baffle is 3 ft. 6 ins. square, the hole being about 10 ins. in diameter. With this arrangement the radiation is greater since the rear of the diaphragm contributes its quota as well as the front. The distribution of the radiation at the higher frequencies is however quite different at the two sides of the diaphragm, since one side is concave whilst the other is convex. Also, the box and the magnet and cradle cause acoustic shadows. This is however of little moment since the reflections from the boundaries of

Digitized by Google

the room tend to equalise matters. In another form, the cradle and diaphragm unit of Fig. 13 can be mounted on a wall bracket (corner or otherwise) and a suitable

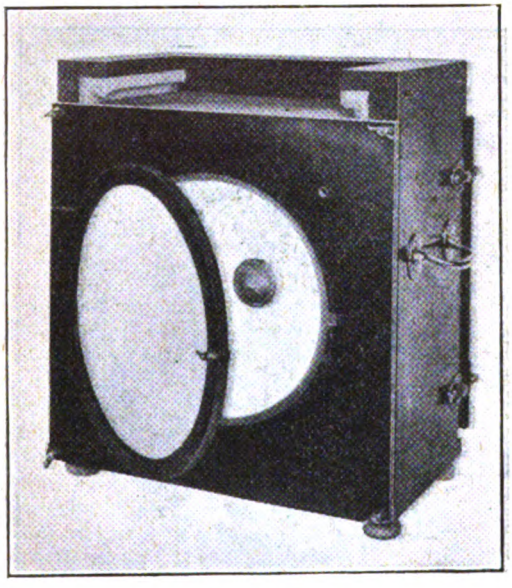

Fig. 14.

ornamental screen or baffle of curtain or other material mounted at the front.

There is no opportunity here to enter into the details of design, but it is of interest to note that the coil drive is much more amenable to calculation than the reed type. The proper proportions to secure uniform radiation at all frequencies are determined by calculation and by experiment. The mechanical and commercial aspects must of course be taken into account. For example, excessively small or excessively large diaphragms are clearly ruled out, apart from acoustic reasons. The smaller a diaphragm, the greater the amplitude and the greater the strain on the supporting ring at the edge. The larger the diaphragm, the more cumbersome is the apparatus.

The output for any given diaphragm is determined by the mass and L/R of the coil, the output transformer and the impedance of the power valve (or valves in parallel). By suitable design I have found it possible to obtain an overpowering bass or an overpowering treble register. It is desirable, of course, to work midway between these extremes. If the value of L/R is relatively large the valve impedance low, and the output transformer primary of adequate inductance (low resistance) the bass will be very pronounced. In the extreme case of zero resistance of valves transformer and coil when stationary, the only resistance would be that due to motion of the coil in the magnetic field. Since for given radiated power the amplitude increases approximately inversely as the square of the frequency, the resistance is greatest at low frequencies. In general, however, with a diaphragm of reasonable size* this resistance is of such a value that for equal grid voltages on the power valve at all frequencies the current through the moving coil decreases with increase in frequency due to the reactance ωL being greater than R (except at very low frequencies). Thus the bass register is very prominent. By inserting a suitable resistance in the coil circuit the current can be made tolerably equal at all frequencies thus giving a fairly uniform output.

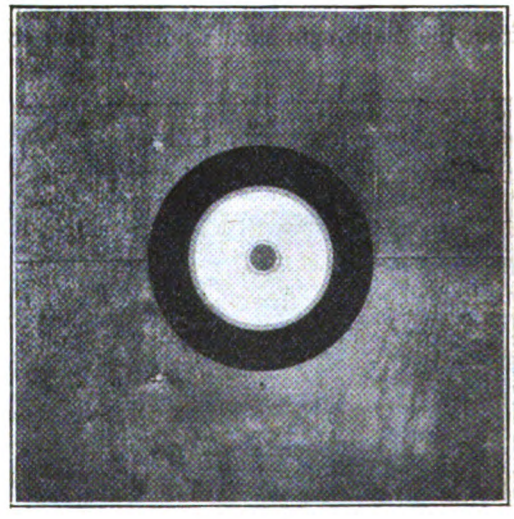

Fig. 15.

The chief feature of this instrument is the absence of resonating components. The paper cone has, naturally, a fundamental frequency with its accompanying series of

* The motional resistance obviously increases as the diameter of the diaphragm decreases, since the latter has to move farther for the same power output.

Digitized by Google

overtones. These, however, are of little account and do not detract seriously from the faithfulness of the reproduction.

Demonstration.

A demonstration was then given of the coil-driven cone loud-speaker on the table. The experiments conducted were as follows :—

(1) Orchestra at normal strength with uniform input at all frequencies.

(2) The same at an intensity greater than the original.

(3) No. 1 at reduced intensity showing the bass to be relatively weaker.

(4) The human voice at natural loudness.

(5) The human voice at the same loudness as the orchestra in No. 1, showing pressure wave distortion.

(6) The effect of cutting off the tones below 500 cycles, and for comparison the result of re-inserting them by means of a switch, thus giving a quick change over.

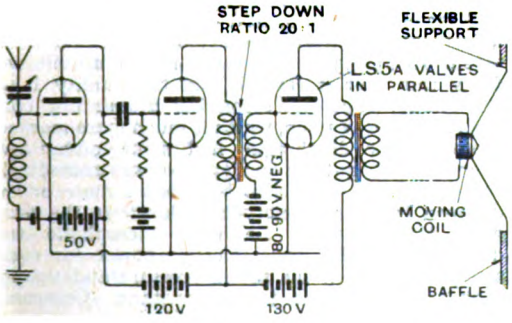

Fig. 16.

(7) The effect of reducing the high tones thus making the letter *S* sound like *F*.

(8) The effect of increasing the impedance of the power valve, thereby reducing the low tones.

(9) The partial beam effect when the diaphragm is used within the box, as in Fig. 14.

(10) The apparatus was arranged to operate under normal conditions giving natural loudness level. When the baffle was removed the low tones were reduced in a remarkable degree.

The orchestra during the test did not have any pronounced tones as in the usual studio transmissions where drums and double bass are used. The diagram of connections, minus the devices* used for items (6) and (7), is given in Fig. 16.

The lecturer stated that the intensity obtainable is well in excess of that obtained in the lecture demonstration and, using eight LS5A valves with 400 volts high tension, speech is quite distinct at 100 yards. There is no trace of resonance even with this intensity.

In conclusion, the lecturer thanked Mr. Child for assistance in erecting the apparatus; the Chloride Electrical Storage Co., for kindly supplying the accumulators; Messrs. McMichael for the detector unit; and the Marconi Co. for allowing him to demonstrate the instrument.

DISCUSSION.

Dr. R. L. Smith Rose, who opened the discussion, said : I was very pleased to come here to-night and listen to the paper, which Dr. McLachlan has delivered in his usual breezy style. He has made this popular subject very interesting, and it does seem to one who is not intimately in contact with loud-speaker development that we are getting down to an understanding of the scientific principles upon which loud-speakers should be designed and constructed; that being so, I am sure that we shall make progress much more rapidly than has hitherto been possible by the hit-and-miss methods of the past. It is interesting to learn that all the principles underlying the development of the loud-speaker were discovered and enunciated many years ago, even before the days when wireless became a practical proposition. For, as I understand it, this instrument is merely a development of a former device, patented many years ago by Sir Oliver Lodge, combined with the application of certain acoustical laws discovered even before that time. Another point that has impressed me is the question of obtaining uniform amplification. We have heard a lot about distortionless amplifiers and the construction of transformers which have uniform frequency-amplification characteristics, and the struggle there is to get a transformer which will amplify the low tones to the same extent as the high tones. In the demonstrations we have been shown an amplifier, which not only gives uniform amplification, but will also give a characteristic of practically any shape that one requires to give better reproduction, *i.e.*, either the upper or lower end of the musical scale can be exaggerated to correct for some defect elsewhere in the system. This shows that Dr. McLachlan has a very comprehensive grasp of the principles of amplification, and that he has this amplifier completely under his control throughout the whole range of audible frequency. I should like to know how these amplification characteristics are obtained at the lower end of the frequency scale, because it is so

* These are given in the *Wireless World*, 13th January, 1926, *et. seq.*

Digitized by Google

difficult to make measurements by audibility methods at the lower frequencies (*e.g.*, below 250 cycles per second).

Mr. H. Bevan Swift: I think this has been a most interesting and practical lecture, and there are one or two points which I should like to raise. The first is that Dr. McLachlan spoke about the bass tones disappearing first. I do not know whether you have ever heard a band in the distance, but I have always noticed that it is the bass drum which is heard first, which seems to show that it is the low tones which come through first. The other feature is the cone loud-speaker, and I am thoroughly in agreement with what Dr. McLachlan has said about this, because I have had one for about two years, and it has given the most wonderful results. Years ago, when broadcasting was first started, we had a great many straight-horn loud-speakers of a well-known make, but they were not designed or suitable for broadcasting reception, and I used to put mine inside a sideboard cupboard to make it bearable. This little paper cone loud-speaker, however, has been a revelation to me. It was made from the A type Brown earpiece, with a 10-in. paper cone fashioned out of ordinary cartridge drawing paper fixed by a small screw in the centre to the reed. There is one thing in the paper, however, on which I rather differ from Dr. McLachlan. In the aluminium cone used in the Brown earpiece there will be found a small ridge running all the way round the edge, and I repeated that in the paper cone because I found it was not practicable to fix the edge of the diaphragm direct to the board used, which was $\frac{3}{16}$-in. three-ply board. This little ridge gives the cone a certain amount of elasticity, enabling it to respond to the vibrations rather better. I notice that Dr. McLachlan uses an edging of stockinette, but I would be rather doubtful of the lasting quality of this material. I do not know whether the author has considered one point, and can give us his ideas on it: I mean the question of the weathering effect on the paper. I was rather interested to hear that Dr. McLachlan has used aeroplane dope on it. I tried using cellulose varnish, but it utterly spoiled the tone, and I had to take the paper cone out and put in a new one. We never got such good results as when we just left the bare cartridge paper. The usual minute screw in the Brown reed is removed and the hole tapped out for a 10 B.A. screw, and we fixed the apex of the cone over this with a little drop of Seccotine, which we found better than sealing wax, which a good many people have used and which is liable to crack.

Mr. P. G. A. H. Voigt: A little while ago I opened *The Wireless World* and observed in it some diagrams and an article by Dr. McLachlan, and now we have a lecture by the same gentleman. I had not time to read the article then, but, after what I have heard to-night, I am going to. I have been working on the subject of loud-speakers for rather longer than Dr. McLachlan, but not quite so fast. I started well over two years ago, but when one does not put in all one's time on one particular subject, one is apt to go slow, especially as the results I got at first were somewhat discouraging. I came to the conclusion, that the ordinary loud-speaker fails on low tones, for the very simple reason that the diaphragm or reed is incapable of moving over a big enough distance to reproduce these tones satisfactorily, and, like most other people at that time, I considered that the horn, with all its attendant overtones, etc., was in every way objectionable, and to be avoided at all costs. Therefore I worked on similar lines to those adopted by Dr. McLachlan, and developed a loud-speaker in which there was no reed and no horn. I used a moving coil system, without a reed, hung on bits of silk. From what I have heard of Dr. McLachlan's loud-speaker this evening, I should be inclined to think that the one he constructed does not get right down to the very lowest bass, because the diaphragm is incapable of moving freely. Dr. McLachlan did not tell us whether his moving coil is supported on some reed system or not, but I should be interested to hear. With my reproducer I could get down to such a low note that I could see the diaphragm move, and count how many times per second it moved, and I could also get well up the scale. Dr. McLachlan mentioned the time taken for a pressure to reach the edge of a diaphragm after it had started from the centre. I considered this matter, and came to the conclusion that, when a big force is applied to the point of a cone, it will crush and so I developed a new type of diaphragm which I thought would be stronger, stiffer and possibly less resonant. I calculated my resonance to be above 5,000 cycles, and made an experimental one, but a more awful noise you never heard. Its resonance came somewhere about 2,300. It was made of aluminium, fairly thin, but it rattled, and the quality I got was tinny. The corresponding aluminium cone has resonance at 1,800, which is much more marked, therefore my diaphragm had some advantages over the cone, but the quality I got was exceedingly tinny; in fact, it was so bad that I more or less dropped it. As a microphone however the thing gave good quality. Later a microphone was developed to give equal electric power for equal sound power, *i.e.*, the sound pressure and voltage output relation was to be constant. Compared with the B.B.C., it sounded as if there was a big condenser across my circuit somewhere, but I got an extraordinarily natural result. I looked for anything that might give this effect, but eventually came to the conclusion that it was the B.B.C. sending out on an "audibility" basis which tilted the whole tone scale upwards. Now to put this right, on all their outside broadcasts I use an additional note magnifier with a 250μF condenser across the primary. I now get such a natural effect from an ordinary loud-speaker that you can almost imagine someone standing and speaking where the loud-speaker is. There is a naturalness which I had never previously heard from the horn type of loud-speaker; with my own microphone, or the B.B.C. corrected, the quality I get from my experimental loud-speaker, if you ignore the rattles, is almost perfect. I should like to ask the author what is the efficiency of his loud-speaker? I have found that the fact that the air do not go off in a beam reduces the efficiency of low notes on a loud-speaker like the author's very considerably. This may be prevented by using a horn or distributor which will allow the air to expand

Digitized by Google

slightly without expanding so much that there is loss of pressure. The only thing is that a horn of that sort is extremely unwieldy. I have calculated that the efficiency of such an instrument can be made about 40 per cent. If I ever give a demonstration with it as successful as Dr. McLachlan's to-night, I shall be very pleased.

Mr. A. E. Bawtree: I should like to thank the lecturer for an exceedingly instructive and interesting address, and for the very fine demonstration which he has given us. There is one technical point which I missed, although Dr. McLachlan explained it, and that is the way he tuned in order to emphasise or reduce the S's. If he would not mind explaining that again I should be extremely obliged. I am afraid I cannot agree with Dr. McLachlan and others who have spoken with regard to the point that the cone loud-speaker is superior to the horn type. I have carried on researches in connection with the phonograph for about eight years, and with loud-speakers for three years, and my opinion is decidedly the other way: that the reproduction from the best horn loud-speakers is far and away better than any I have ever heard from a cone loud-speaker. I do not consider that the reproduction from the cone loud-speaker is by any means equal to that obtained from the horn loud-speaker which I had the honour to describe before this Society last month.* There is another point, apart from the actual quality, and that is that there is a curious psychological difference between the two types of instrument. Our ears seem to possess very minute powers for determining the distance at which a sound is from us. I have noticed that I can tell, when two children are playing on the lawn outside the house, which of the two voices is the nearer, although they may only be a yard or two apart, and we have that power of determining the distance of sound. It is all right to use a cone loud-speaker in a hall of this size, but in a private room it would produce the very unpleasant sensation of bringing the person speaking, for instance, a great deal too near. On the other hand, in the horn type of instrument which I described, you cannot possibly get within 11 feet of the source of the sound, and then you have a more correct sense of perspective, and it increases the sense of naturalness.

Captain L. F. Plugge: I think it is very interesting to watch progress; and with regard to wireless, progress in the field of loud-speaker construction has been specially interesting to follow. A couple of years ago we had a lecturer here who spoke on "Perfect Reproduction." I was looking back in my scrap-book at some of the facts mentioned during discussion at that meeting and I remember that the lecturer of that meeting uttered the following sentence:—

"A horn adds efficiency to a loud-speaker."

I took part in the discussion and expressed my disagreement with the lecturer in regard to his statement, strongly urging the necessity for investigating the diaphragm loud-speaker, which at that time had received very little attention in this country. As I mentioned, two years have elapsed, and we are now listening to a very interesting lecture entirely about the diaphragm loud-speaker, and we can realise the enormous progress that has been made during these years with regard to the type I had advocated. What is especially interesting in the lecture to-night is the very clear way in which the lecturer has shown us the fundamental points involved. From these we can now see which direction we have got to travel on for further progress.

I do not think there is anybody here who would care to say that the horn adds to efficiency. We have heard from the lecturer to-night that one of the main difficulties with the diaphragm loud-speaker he has submitted is that of the slow speed of propagation of sound along the diaphragm owing to the fact that one is obliged to communicate motion at one point only. Direction of further progress is therefore clear. We have to work in order to get a diaphragm loud-speaker to which we can communicate vibration all over the surface of the diaphragm at the same time. It may be, in this connection, interesting to mention that such a loud-speaker has been evolved in Switzerland and I had the advantage of seeing it and testing it a year ago when visiting Zurich. The rights have been sold to a British firm and it is now sold in Great Britain under the name of the Stataphone. The principle of this loud-speaker, which is also a diaphragm type, is new. The diaphragm is one side of a condenser and the sound is produced by the strain which the dielectric undergoes owing to the variation of potential on the plates. Five hundred volts were necessary on the Swiss instrument, but in the British replica this has been reduced to two hundred. It was necessary to make this reduction in order to be able to place the instrument in the hands of the public. The use of a condenser loud-speaker also enables the use of a plane diaphragm. We have heard from the lecturer to-night that a diaphragm which is a plane would be theoretically the best. With the ordinary type of diaphragm loud-speaker it is necessary to increase the moment of inertia of the section in order to make it rigid. This is done by building the diaphragm in shape of a cone or by pleating it, as in certain types of well-known diaphragm loud-speakers. In the case of the condenser loud-speaker, the dielectric which is in mica forms the vibrating diaphragm. It is of a fairly large section and consequently it is possible owing to this fact to maintain it in the shape of a plane and yet keep it rigid. It can be seen that with this type of loud-speaker, the sound vibration is communicated simultaneously to all the points of the diaphragm and furthermore the change from the electrical field into the acoustic field takes place without any mechanical device such as a reed, which we have heard to-night, introduces an independent resonance system. I feel that it is in this direction that further progress will be made and I would be pleased if the lecturer could throw some further light on this new development.

Mr. E. C. Garton: There is one question I should like to ask. When the lecturer was demonstrating the effect of unnatural loudness in the voice, it occurred to me that this was caused, not so much

* R.S.G.B. Informal Meeting.

Digitized by Google

by a general increase of the low lones, as by resonance on one particular low note, probably below the middle C. Can the author agree that that is the fact, and, if not, what is the cause? There is one other point. Will he tell us the type of valve he is using in his last stage? It struck me as being very free from grid current distortion if it is an ordinary valve.

Dr. McLachlan, replying to the discussion, said: Dr. Smith Rose has asked about variable amplifiers, but I think that matter has been discussed in the last three issues of *The Wireless World.** Mr. E. C. Cork of the Marconi Co. has taken measurements down to about 200 cycles, and there was no sign of the amplification falling off. I have made measurements of the permeability of the iron in transformers, from which it is possible to calculate the inductance, and it is a comparatively simple matter, if the inductance and the impedance of the valve are known, to find where the transformer begins seriously to cut off. With a low impedance valve like the DE5, calculation shows that the amplification begins to fall off at about 35 cycles per second. At 35 cycles it is about 95 per cent. of the value on the

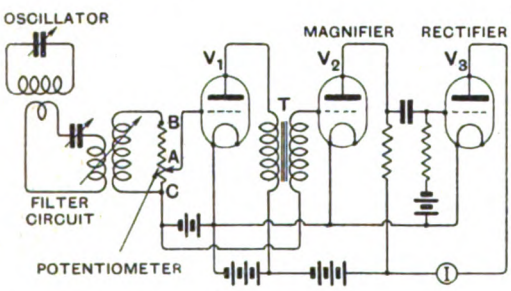

Fig. 17.

horizontal portion. If you want to cut off the high tones you can very easily do so by means of a condenser across the primary of the transformer. If you put a .003μF condenser across the primary of one of my special 2 to 1 transformers, the amplification is practically uniform throughout the scale. So far as measurement of amplification below 200 cycles is concerned the circuit shown in Fig. 17 may be useful. V_1 is associated with T, the transformer under test, whose secondary voltage is amplified by one or more valves V_2 and passed on to the rectifier V_3. By a switching arrangement the point A is connected to the grid of V_1 and then B is connected to the grid of V_2 so that V_1 is out of commission. The point A is adjusted until equal deflections are secured on I in both cases. The joint amplification of V_1 and T is clearly the ratio BC/AC. The switching must be arranged so that the filament, H.T. and grid bias conditions of the valves remain unaltered.

Mr. Bevan Swift raised the question of hearing the drum first. I quite agree with him. If you have sufficient energy on the low tones you will always hear them first, but I think you will agree that the drummer in a regimental band on the march hits the drum very hard in order that it may be heard all along the line. If you listen to a broadcast transmission, you will find that unless the amplification is uniform down to the lower frequencies the drum is not heard properly. In listening to a drum one has to be quite sure that it is the fundamental of the drum which is audible. Low tones are very often perceived by the overtones and not by the fundamental. The point is that we ought to hear the fundamental in proper proportion to the overtones.

It is easy to conduct an experiment when a band is playing by closing one's ears with the fingers. The low tone instruments will almost disappear (see Fig. 10) provided of course one is not too near the band. Mr. Bevan Swift raised the question of the edge of the diaphragm. I can quite believe what he said. The point is that if you rigidly fix it you immediately prevent free motion. By having the edge free, you immediately remove the constraint and the motion of the cone is not restricted at low frequencies (except by the reed) and you get no resonance effect from the member to which it is fixed. He will see that in all cases I have mentioned this evening the edges of the cones are "free," *i.e.*, the constraint axially is small. As to the lasting qualities of the stockinette, I cannot say, but from experience in the tropics I should say that it will last much better than rubber, but I must give rubber its due. I have had some of these rubber-edged cones a long time and they are as good as ever. How long they will last, however, I do not know. I tried celluloid amyl-acetate varnish and exposed it to snow, sleet and rain together with cones treated with aeroplane dope. The aeroplane dope seemed to be better and gave every satisfaction. Mr. Voigt has made a number of apparently contradictory statements about low tones, but I do not follow him when he says that the reed type of diaphragm cannot give low tones. It all depends how low the tones are. If you take about 30 cycles, I agree, but if you take 70 or 100, I do not agree. In general, compared with a coil drive system, which I have here, you certainly cannot get the low tones to nearly the same extent with a reed. That is obvious from what I said in the lecture. If you want the whole gamut of low tones, a coil drive is imperative. That is a theoretical deduction which has been confirmed by experiment. On the question of whether we get down to the low tones with this instrument, we get too much of them sometimes, but the orchestra during the demonstration did not have any pronounced low tones (chiefly jazz-music).

If Mr. Voigt reads the paper he will find his statement that the diaphragm cannot move freely is a pure fiction. The whole point of the design is the free motion of the diaphragm.

During the afternoon transmission of the organ from the Capitol Theatre the low tones were so powerful that the floor of the lecture theatre vibrated considerably. Mr. Voigt will perhaps appreciate that there are occasions when the very low tones are absent from the transmission, *e.g.*, certain classes of orchestra, the violin, flute, etc. I cannot quite grasp the visibility of low notes and I think Mr. Voigt has overcooked his egg. It is difficult to hear anything below 20 cycles and I believe any motion greater than 16 per second

* "Speech Amplifier Design," N. W. McLachlan, *Wireless World*, 13th, 20th, 27th January, 1926.

Digitized by Google

gives continuous vision, unless there is some irregularity superposed. This loud-speaker is just as efficient as the horn type working with the same power input. This has been tested in the open at a distance of 100 yards from each instrument. The only point is that the sound radiated from the horn type is more of a beam whereas in this loud-speaker, with the baffle, the radiation at the back is of the same order as at the front. If it does not sound so loud as the horn type at the front, one must remember that the horn type gives very little sound at the back. The basis of comparison is the mean spherical radiation. On the question of efficiency, most of the input is wasted in moving the coil and cone backwards and forwards. If the weight of the coil and the cone could be reduced to one-tenth its present value, you would probably want the instrument outside the lecture theatre, because it would be so loud. The resistances in the circuit are extremely small so that the reduction of efficiency is due to working on wattless current. Mr. Bawtree asked how the S's are reduced. This was effected by putting a condenser across the resistance in the anode circuit of V_1 of Fig. 16.

Mr. Bawtree thinks that the horn type is better than the cone type. I think this is largely a matter of listening under false conditions. Fundamentally, the horn type is bound to have resonance due to the air column and the horn itself. Then Mr. Bawtree says the cone loud-speaker sounds unpleasantly near in a private residence. All I can say is that my experience is not in accordance with his. The instrument sounds far away when the intensity is reduced, and when the intensity is increased there is nothing particularly unpleasant about it since resonance is absent and all the notes have equal prominence. Also the radiation of sound is more uniform. Captain Plugge mentioned an electrostatic loud-speaker using a plane diaphragm. Messrs. Siemens and Halske have an instrument with a flat diaphragm, about 8 inches square and it works on a principle which is similar to that used in the instrument I have here to-night, except that instead of a circular coil there are a series of straight copper strip on edge.* This gives tolerably uniform loading over the diaphragm. The strips are placed between the poles of an electromagnet, alternately north and south. It is a zigzag arrangement and the current passes through it and creates a magnetic field which reacts on the steady magnetic field of the magnets so that the plate moves in and out in the usual way. A baffle is also used. I do not think you can say that the reproduction from an instrument of this type is likely to be better than from the one I have designed. I consider that the reproduction from an instrument of the coil-drive type can only be critically judged when we have a microphone superior to those now in use. In any case, it is difficult to say which would be the better unless the two were heard side by side. According to accounts, the Siemens and Halske instrument does not reproduce the letter S; I do not think there would be any difficulty in getting the same effect on my loud-speaker if the coil was designed to have a very low resistance. In the Siemens and Halske case, I expect they had too high a value of L/R. If you have an inductance with a very low resistance, and supply an alternating current of varying frequency, it is quite obvious that the impedance of the coil is chiefly due to reactance. A current of high frequency will be choked off relatively to that at low frequencies, and I think that is what is happening in the Siemens and Halske speaker. The question of the electrostatic loud-speaker is another thing. I do not think you could theorise on it at random. It is one of those things in which you have to do experiments to find a hypothesis on which to base the theory. Apart from clearances between the plates and the relationship between force and distance it seems to me that such an instrument may have practical disadvantages, *e.g.*, high voltage. Some years ago I made an electrostatic loud-speaker and although I did not take much trouble with it, the reproduction seemed quite good.* Trouble was experienced due to rattling because I did not use a proper diaphragm. The question of stiffness is very interesting, and as stated in the lecture the cone could be replaced by a disc if you could get the ratio $\frac{\text{elasticity}}{\text{density}}$ large enough. It is another of those things in engineering in which we are limited by materials. There is, however, no trouble about the propagation of energy down the cone unless it is abnormally large. I do not think the pleated diaphragm is a good construction because it generally gives rise to a nasty resonance, but it depends on the geometrical form of the diaphragm.

Mr. Garton asked about resonance on the middle C and the unnatural loudness in the human voice. The deep tone is partly due to pressure wave distortion as explained in the lecture, but there may be a resonance. I have tested the loud-speaker and the amplifier, and there is no resonance in either. Where is it? It appears to be in the transmission! I know exactly what Mr. Garton means, because I have experienced that little trouble at various times. As to the last stage, referred to by Mr. Garton, the valves are of the LS5A type. To preserve the low tones, it is imperative to use a valve of low internal resistance, and it may be essential to connect several valves in parallel. I have four here, and if I want to get a still greater low tone effect I can double this number. There should be little grid current with 85 volts negative on the valves, unless an abnormal signal strength is applied.

Mr. G. G. Blake, proposing a vote of thanks to Dr. McLachlan, said: I feel sure I shall be voicing the feelings of everybody here when I say that we have enjoyed this evening some of the best quality reproduction with loud-speakers that many of us have ever heard. Certainly the reproduction has been very perfect indeed. Dr. McLachlan said it is hardly possible to reproduce the deep bass notes satisfactorily with the same instrument with which one can reproduce the human voice. That is only a constructional matter, and it can be done, but not very well, with the same instrument. It seems to me, therefore, that two instruments will be required, one for reproducing music, for musical people who want to get the best musical effects, and

* See N. W. McLachlan, "Loud-Speakers," *Wireless World*, 4th November, 1926.

* British Patent 206,601.

Digitized by Google

another for speech. A point which has apparently been overlooked during this discussion is the use of the board (on Dr. McLachlan's instrument), for cutting off sound-waves from the back of the cone. I was present a little while ago at the Institution of Electrical Engineers, when Captain Eckersley spoke to us on the latest developments of broadcasting, and at that meeting one of the speakers pointed out that in the studio at 2LO the microphone is somewhere near the centre of the room, or some distance from the wall, and therefore the deep notes tended to curl round rather than to play with full force upon the microphone, and it was suggested that it would be better if the microphone was let right into the wall. That would be something like the sound board which Dr. McLachlan has shown us to-night. The suggestion in question called forth a characteristic reply from Captain Eckersley, who said that it would be better, perhaps, if everybody could come up to the B.B.C. studio and listen to 2LO through a hole in the wall.

Mr. H. Bevan Swift seconded the vote of thanks, which was carried with acclamation.

Dr. McLachlan, acknowledging the vote of thanks, said: I thank you for the kind way in which my lecture has been received this evening. It has been a great pleasure to me to give a demonstration, because I think it is just as well to let people know what developments are going on, and healthy discussion does no harm. I should like to reply to Mr. Blake, who made an interesting statement with regard to the position of the microphone at 2LO. I usually put my loud-speaker on the top of the piano, and a long time ago I found that when it was moved towards the wall, the low tones disappeared. The pitch went up to a remarkable extent relatively, and, of course, the explanation was pretty obvious. Sound is radiated from both sides of the diaphragm. The sound at the back is reflected from the wall. Since the velocity of sound is great compared with the frequency of the low tones, the wave from the front interferes with the reflected wave from the wall, and the low tones are cut off. In any ordinary diaphragm loud-speaker without a baffle, I have found that by designing the diaphragm to have a definite low resonance point I can vary the tone. If the pitch is too low, I push the instrument against the wall, but one cannot always be pushing the instrument against the wall and taking it away again, although, if one is enthusiastic, one can devise a Lazy Tongs arrangement and pull it backwards and forwards from one's armchair. It all comes back to the question of the low tones. If one could always have the reproduction at its natural loudness there would be no difficulty. The loud speaker can be adjusted to the normal loudness of a man's natural voice, and then, on music, all is well. The low tones may sound rather weak, but it is possible to design the amplifier or loud-speaker to enhance the low tones, so that an adequate supply is obtained in a private residence.

Digitized by Google

The Piezo-Electric Effect and its Application to Wireless.

By C. W. Goyder (2SZ—2HM). **[R351.218**

(*Concluded from p. 100 of Feb. issue.*)

This concluding article describes the use of the Quartz Crystal in the Transmitter now in use at the Mill Hill School Station, 2SZ.

Practical Application of the Quartz Crystal to Transmitting.

THE writer found the use of the quartz crystal as an oscillator by far the most interesting. The transmitter now in use has a quartz crystal to control the frequency. As the energy obtainable from the crystal itself is very small, it is necessary to amplify considerably. In this case the final power is 250 watts.

The most noticeable advantage of using a quartz crystal as the frequency generator in a transmitter is, of course, the fact that the frequency is constant. No matter how much the aerial swings or how poor the regulation of the power supply may be, the frequency will not vary. The aerial may be disconnected, any part of the circuit may be adjusted, the valves, coils and chokes may heat up, and still the frequency will not change. The other great trouble of short wave work, keying, is also greatly simplified. The chirpy note so difficult to avoid with self-excited circuits is not possible with a crystal-controlled set.

The trouble caused by generators picking up speed between dots and dashes is, of course, also obviated.

When using a transmitter controlled by a crystal, it will be found that the quality of the note is invariably good. The extremely rough note produced if the high tension supply is not properly rectified or smoothed, when using a self-excited circuit, is due to frequency modulation of the radiated wave. This type of note, besides being difficult to read, causes undue interference. When using a crystal, frequency modulation is impossible. The ripple in the supply can only produce a slight variation in strength. It is surprising to find that full-wave rectification without any smoothing gives a pure note with only a slight modulation, produced by the variation in strength. It can be best described as a "D.C. note with a slight ripple." By using two valves in the self-rectification circuit, no rectifying valves are needed and yet a good note is possible.

Another advantage, not so obvious, is obtained. It is well known that telephony on the 45-metre band is subject to distortion which is apparently quite out of control of the transmitter or receiver. At certain times of the day or night it is possible to receive good telephony from amateurs, which at other times may be badly distorted. To illustrate the point, a test made by the writer is interesting. Four telephony transmissions, each of ten minutes duration, were made at midnight, 8.30 a.m., 3.0 p.m., and 7.0 p.m. Twelve reports were received from various parts of England from amateurs who listened to all four transmissions. The midnight transmission in all cases was subject to fading, bad distortion, and was weak; similarly the 8.30 a.m. transmission. The 7.0 p.m. test was strong and of good quality in some places, subject to fading, distortion, and weakness in others. The 3.0 p.m. transmission was reported strong and of good quality in every case, without exception. No alterations were made to the transmitter at this end during the tests. Judging from these and subsequent tests, it appears that the quality varies from time to time, depending upon the hour and atmospheric conditions.

It is usually possible to transmit good telephony all over England between 11 a.m. and 3 p.m. At other times of the day the quality may be good or bad, or vary every few minutes. In nearly all the cases mentioned above, the quality distortion occurs when fading is bad. This has been proved

Digitized by Google

time after time. The position is, therefore, that the fading of a signal introduces quality distortion.

It is interesting to try and furnish an explanation for this. It is generally accepted that one cause of fading is produced by the interference between two waves arriving at a point by two different paths of different length, so that there is a difference of phase between them. Consider the effect produced by a frequency modulation of the carrier wave by telephony—at any instant the carrier wave will have one definite frequency. The next instant it may have varied ± 100 cycles, due to frequency modulation. Now, when fading occurs, the received wave is arriving by two paths of different length, therefore the first wave travelling by the longer path, and the second wave ± 100 cycles different in frequency, travelling by the shorter path, may arrive at the same instant. This would produce a

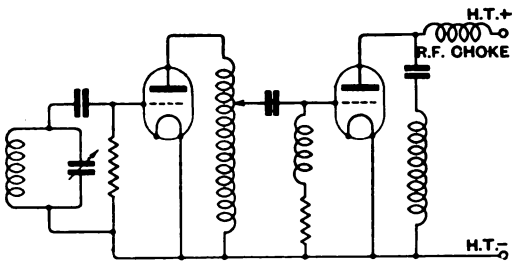

Fig. 13.

beat note of 100 cycles frequency. From instant to instant the value of this beat note would vary. The result would certainly be distortion of some kind. If this explanation is correct, it means that quality distortion on the short waves, due to fading, is caused by frequency modulation of the carrier.

It seems to the writer that it is quite impossible to modulate a set on 45 metres without getting appreciable frequency modulation. Take, for example, the set using choke control and a master oscillator as a set most unlikely to give frequency modulation. In an amateur set the H.T. supply for the drive circuit and the power amplifier is usually common, due to the expense of supplying two separate H.T. voltages. This being the case, the fluctuations of H.T. voltage on the amplifier due to modulation will affect the drive circuit. This will produce frequency modulation. Also, the method used for transferring the energy from the drive circuit to the grid of the amplifier is to take a tap on the plate coil of the drive circuit as shown in Fig. 13. The large variations in voltage on the plate of the amplifier due to modulation constantly vary the resistance of the plate-filament path, and therefore, of course, the grid-filament path. The grid-filament path is in parallel with a portion of the plate circuit of the drive valve. The variation of this resistance in parallel with the inductance varies the effective value of the inductance. This causes a direct modulation of the frequency of the drive circuit.

Using any self-excited circuit, the frequency modulation would be worse.

The above considerations prompted the writer to construct a quartz crystal-controlled transmitter as the only possible method of avoiding frequency modulation.

By using a constant frequency all distortion when fading occurs due to frequency modulation should disappear if the above reasoning is correct. Judging from the reports received, this is decidedly the case. *Not one report states any distortion taking place during fading, even at times of the day when fading is very pronounced.*

The quartz crystal controlled transmitter consists essentially of a crystal oscillator giving a maximum output of under ten watts, which is progressively amplified until the required power is obtained. This is a case of radio-frequency amplification on a very short wave-length, so some difficulty with the amplifiers and a relatively low efficiency may be expected.

There are two ways in which the problem may be solved. The crystal may be ground so that the fundamental response is on 45 metres, and this may be amplified to the required extent, or the crystal may be ground to some multiple of 45 metres, such as 90 metres. This necessitates a frequency change in one of the amplifiers.

With the first method, in which the fundamental frequency of the crystal is amplified, it is practically impossible to prevent self-oscillation in the amplifiers. If one considers the fundamental circuit shown in Fig. 14, remembering there are two or

Digitized by Google

three successive stages, it is not difficult to see the reason why this is so. Consider the first amplifier. In the plate circuit is an inductance tuned to 45 metres, and the grid circuit is tapped on to a coil in the plate circuit of the previous valve, also tuned to 45 metres. If tapped on in position "*A*" the circuit is identical to that shown in Fig. 15, which is well known as probably the best self-excited transmitting circuit for this wave-length. The plate and grid circuit are both tuned to the same wave-length, and the necessary coupling to produce oscillation is afforded by the inter-electrode capacity of the valve. The result is that the amplifier oscillates very satisfactorily without any help from the crystal. This can be prevented by placing the grid tap in some position "*B*," such that the part of the coil *BC* is well removed from 45 metres, but the writer found this reduced the coupling to a prohibitive extent. It was found necessary to abandon the idea of amplifying on the 45 metre wave-length.

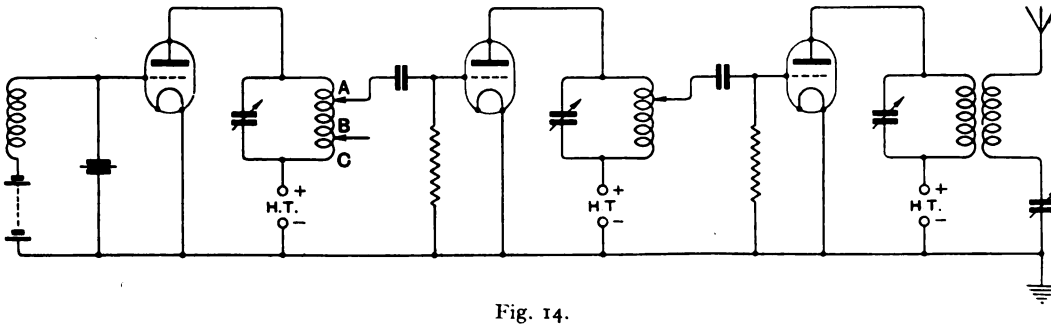

Fig. 14.

Another point against amplification on 45 metres is that the quartz crystal for this frequency would be less than half a millimetre in thickness. This would increase the difficulties of grinding, make it very fragile, and in some cases it is found that the oscillating properties of a crystal cease if it is ground to this extent.

The alternative is to grind the crystal to some multiple wave-length, in this case 90 metres, and to change the frequency in one of the amplifiers. Practically no trouble was experienced with self-oscillation on this wavelength; the amplification by each stage is greater, and the crystal is comparatively robust.

The crystal oscillator was shown in Fig. 7 (p. 96, Feb., 1926.) The plate circuit inductance can be wound with No. 22 wire on cardboard tubing. It may be tuned with a condenser, or simply by using the correct number of turns. The inductance of the grid choke should be such that its natural period is well above 90 metres. If this is not so, the circuit approximates to that shown in Fig. 15, and self-oscillation will occur. The grid bias is not critical. Any of the many types of low impedance power valves may be used in this stage, as the plate voltage should not exceed 350. The power obtainable from this stage is limited to this value, due to the fact that the crystal may crack. It must be remembered that the crystal is in mechanical vibration at a frequency of over three million cycles a second on this wave-length. An increase of plate voltage increases the amplitude of these vibrations until the elastic limit of the crystal is passed, causing it either to crack or burst into several pieces. A small crack or scratch destroys the oscillating property of a crystal.

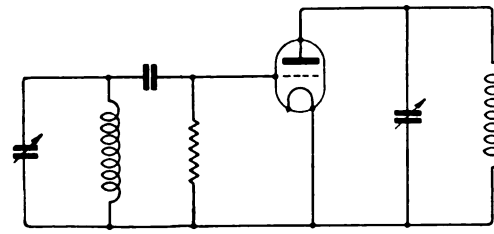

Fig. 15.

Mounting.

The mounting of a crystal used as an oscillator is very simple. The only essential

Digitized by Google

is that the surfaces should be reasonably flat. Quite an inexpensive method is to mount the crystal between two pennies which have been ground smooth on one side. A hole may then be turned in a flat piece of ebonite to take the pennies, which may be kept in place by a spring. A pressure varying from a gram to a kilogram made no apparent difference to the oscillation of the crystal.

The other method of producing oscillations with a crystal (Fig. 16) is not advisable, as there is a greater tendency for the crystal to build up to such an amplitude that it will crack.

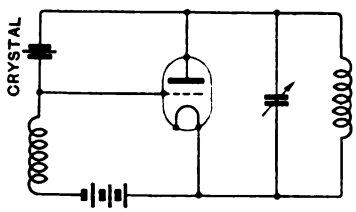

Fig. 16.

If the condenser tuning the plate inductance in the circuit shown in Fig. 7 (p. 96, Feb., 1926), is varied slowly, a position will be found where the plate current indicated by the plate milliammeter suddenly drops. The crystal is now oscillating. By tuning to approximately this frequency with a separate regenerative receiver, a beat note will be produced. If the condenser is now varied through the entire range over which the crystal will oscillate, the frequency of the crystal will vary as shown in Fig. 17. The total variation in frequency is extremely small, perhaps 100 cycles, and is only produced by a large variation in capacity of the condenser, in comparison with which all other variations due to H.T. changes, etc., are negligible. The position marked will be found best for normal working. At the true resonant frequency the crystal usually ceases to oscillate, as indicated by the break in the curve.

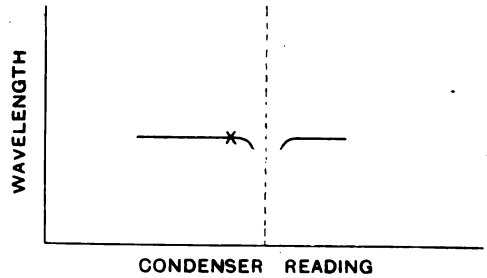

Fig. 17.

The first radio-frequency amplifier should be capable of handling 50 watts. Any valve, preferably of low impedance, capable of dissipating 20 or 30 watts at the anode, is suitable. The plate inductance can be made, as before, by winding No. 22 wire on tubing. The grid tap is gradually moved up the coil in the plate circuit of the crystal controlled valve until the maximum energy transfer, without self-oscillation, is obtained.

The second radio-frequency amplifier is essentially similar to the first. The valve should be of the 100 or 150 watt type.

In the third stage a 250-watt valve is used. The construction of the coils, etc., in these last two stages should, of course, be suitable to handle a considerable amount of high frequency energy. The adjustment of each stage should be completed before adding the next.

With such a set, using three stages of amplification, it is possible to amplify the three or four watts in the crystal stage to three or four hundred. The main losses occur in the frequency changing valve.

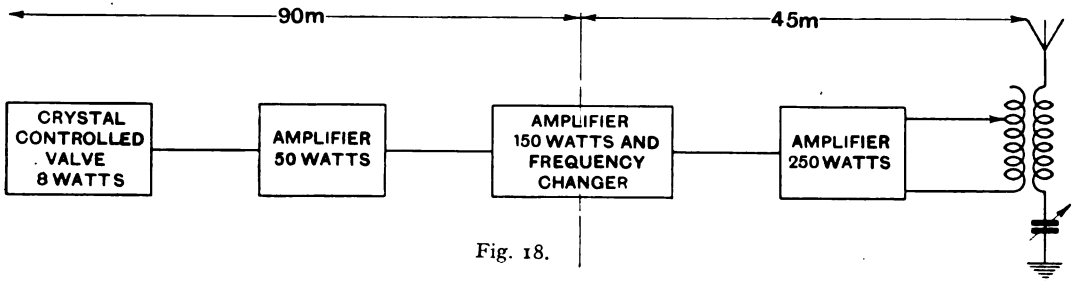

Fig. 18.

Digitized by Google

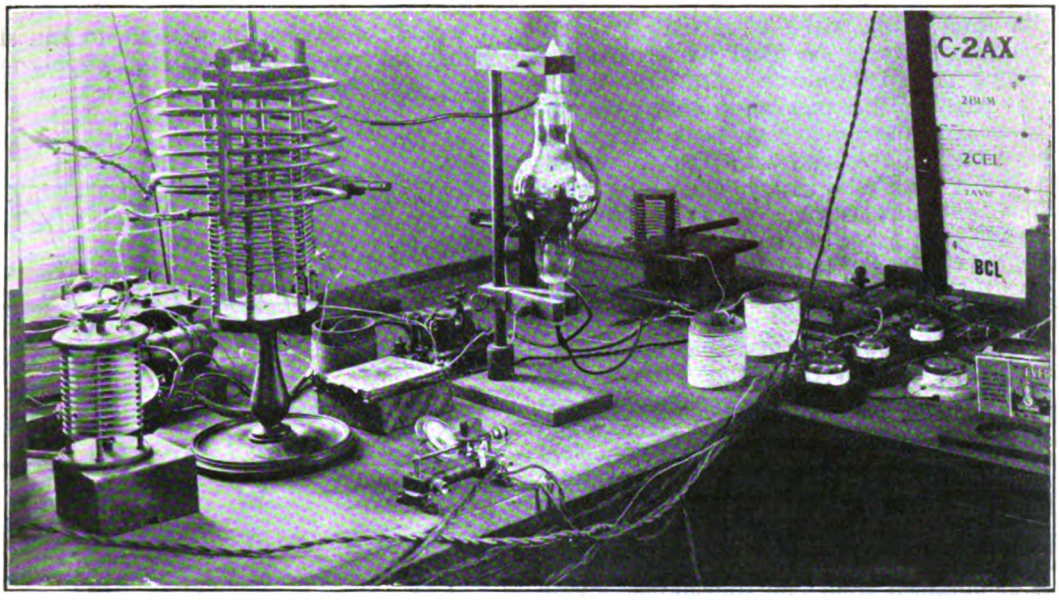

Fig. 19. *The final amplifier and frequency doubling valve. The plate inductance and aerial coupling coil are shown on the left.*

For the amateur allowed an input of 10 watts a crystal controlling a low impedance valve with 300 volts on the plate would constitute the "ideal" set. For a power input up to 100 watts, a crystal controlled valve using one stage of amplification would suffice. For the 10 or the 100 watt set, the crystal should be ground to 45 metres, and the fundamental amplified. It is comparatively simple to prevent self-oscillation if only one stage of amplification is used. It is the addition of the second and third stage necessitating a frequency change and the accompanying losses that reduces the overall efficiency of the set.

The frequency may be changed in the second amplifier, Fig. 18, or in the third amplifier, Fig. 20. Using the former method the second amplifier amplifies and changes the frequency at the same time, and the third stage then amplifies this changed frequency. In the latter method the first two stages amplify at 90 metres, while the third amplifies and changes the frequency at the same time. The plate circuit of this valve is coupled to the aerial. The second method was found to be the better. It is required to change to a frequency corresponding to 45 metres. The second harmonic of the amplifier is, therefore, required. In Fig. 21 (*a*), is represented the frequency of the original wave. In (*b*) is shown the double frequency which is required. In (*c*) is shown the form of a wave in which (*a*) (the fundamental) and (*b*) (the second harmonic) are combined. If it were possible to distort

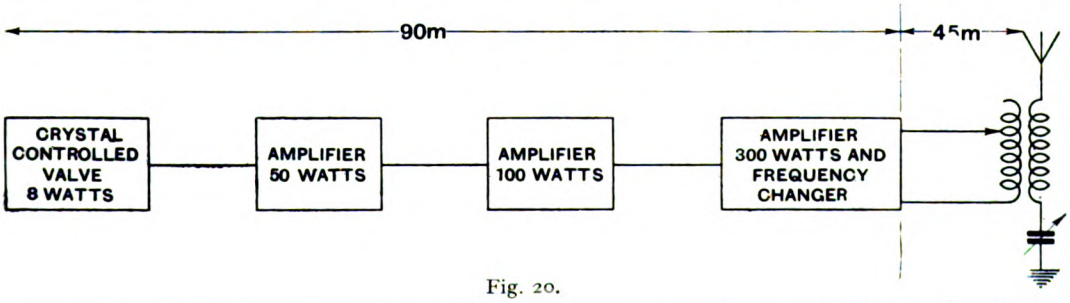

Fig. 20.

Digitized by Google

the form of the wave (*a*) to that of (*c*) the conditions would be ideal for obtaining a strong second harmonic. Although this is not possible, it is possible to distort the sine wave shown in (*a*) to some such form as (*d*) in which the second harmonic is present together with a series of higher harmonics. The second harmonic is then picked out by means of a tuned circuit. By making the grid of the frequency changing valve strongly negative, the wave form will be distorted as shown.

Fig. 22 shows the principal connections of the set used by the author. The crystal controlled valve has only 250 volts on the plate. By running this up to 400 it would be possible to do away with one stage of amplification, but in view of the scarcity and expense of crystals, it was not considered wise. The H.T. supply for the first two valves is half wave rectified and smoothed A.C. obtained from one transformer giving a maximum voltage of 1,000. The last two valves are supplied from the full wave rectifier which was used on the previous set. It would, of course, be possible to run all the valves from a common H.T. supply by using reducing resistances.

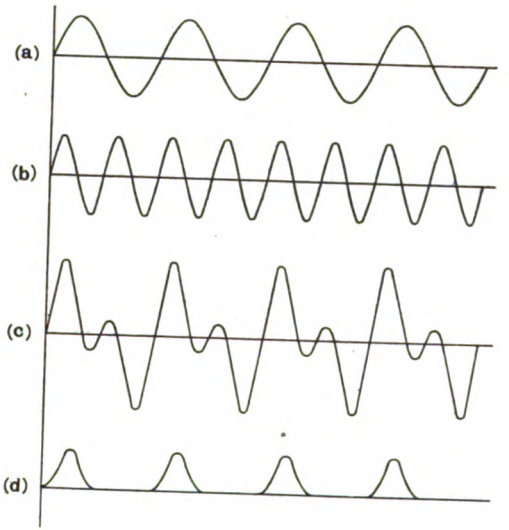

Fig. 21.

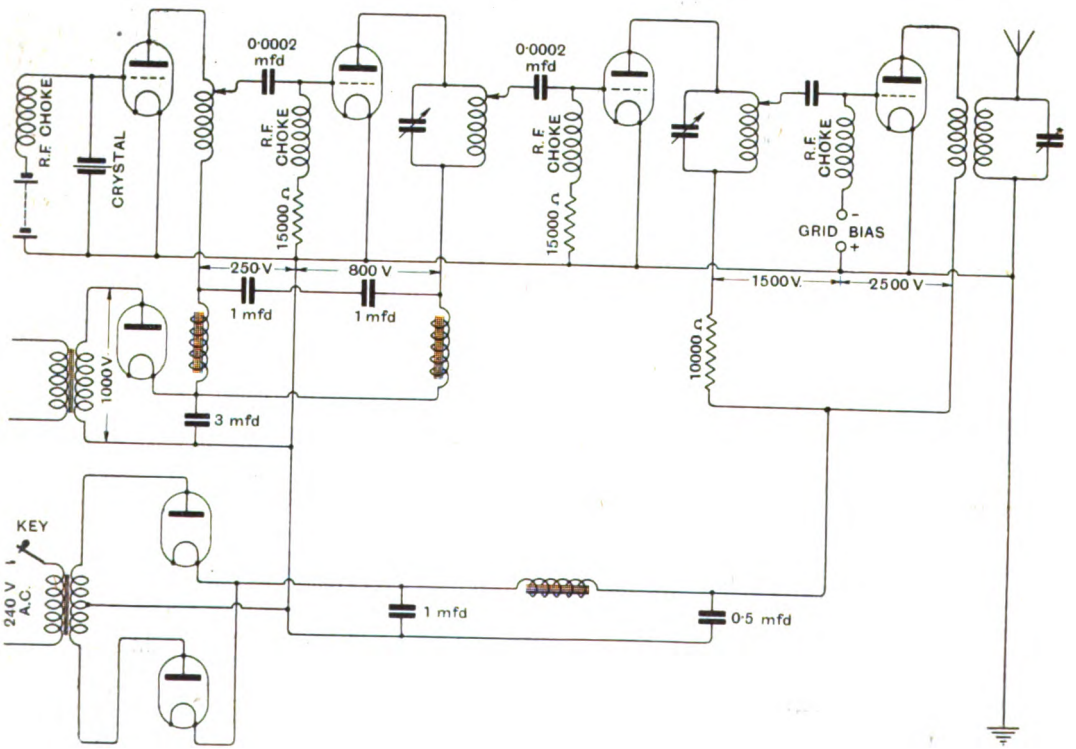

Fig. 22.

Digitized by Google

Modulation.

A set of this type may be modulated in any of the usual ways. Whichever method is used there will be no chance of frequency modulation. Modulating the grid of the last amplifier is a very simple and satisfactory method. In other circuits this usually gives so much frequency modulation that the telephony is unintelligible, but using this method with crystal control many

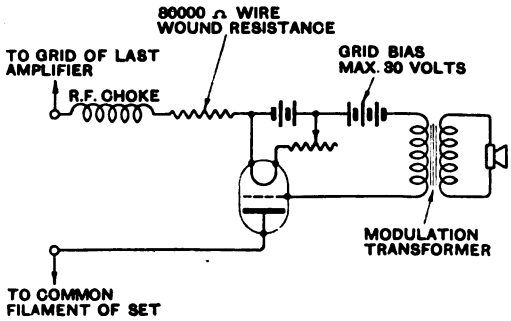

Fig. 23.

reports have been received and not one mentions any distortion. All state telephony very good and a good percentage report it the best telephony received on this wavelength.

It is very gratifying to get these results with such a simple method. The modulator valve is an ordinary general purpose receiving valve. The circuit is shown in Fig. 23. The grid of the last amplifier is connected through a choke to an 80,000 ohm leak then to the filament of the modulator valve. The plate is connected to the common filament terminal of the main set.

The large value grid leak is used to obtain the necessary grid bias. This may be replaced by a dry battery or a small transformer supplying rectified A.C. Still another method is to use a receiving valve as a grid leak, the value of resistance being governed by the filament temperature. If the filament temperature is gradually reduced the power output increases to a maximum and then drops again as the grid becomes too negative. This valve should not be used as a modulator also, as the filament temperature giving the correct resistance is not usually sufficient to give good quality telephony.

In comparing the amount of apparatus required for a crystal controlled set with that required for any other type of set for morse work where over 200 watts is required, it is rather excessive. If, however, good telephony is wanted a master oscillator and choke control must be used necessitating at least four power valves. This is as many as a crystal controlled set would require and the note and telephony of the latter would certainly be better.

Morse and telephony from the writer's set have been received in New Zealand, Australia, China, India, America, and various intermediate places.

In conclusion, it may be said that the beautiful steady note obtained and the absence of distortion when using telephony, has made the building of this set well worth while.

A New Slide Rule.

A NEW slide-rule specially designed for facilitating condenser calculations has been designed by Mr. P. R. Coursey of the Dubilier Condenser Company. The class of calculation to which it is applicable is that involving the connection between current, voltage, capacity and frequency or wavelength. It cannot be used for finding the area of plates which at a given spacing would give a required capacity, nor can it be used for calculating the capacity which, in combination with a given inductance, gives a required frequency, but it answers at once such questions as: What current will flow through a condenser of 0.001μF if λ=400 metres and V=2,000 volts? It has five scales with the following ranges:—

Frequency:	15,000 to 15 kilocycles.
Wavelength:	20 to 20,000 metres.
Capacity:	0.00005 to 0.05μF.
Current:	0.5 to 500 amperes.
Voltage:	0.1 to 100 kilovolts.

Given any three of these four magnitudes, the rule enables one to read off the fourth.

Digitized by Google

Transformer Test Set.

Determination of Phase Shift and Amplification.

[R342.7.009

THE testing equipment to be described has been devised by P. W. Willans for testing the performance of intervalve transformers by measuring their voltage amplification in conjunction with an appropriate valve. It depends for its operation on a novel bridge arrangement whereby both the phase shift and scalar amplification are given as a result of a null observation.

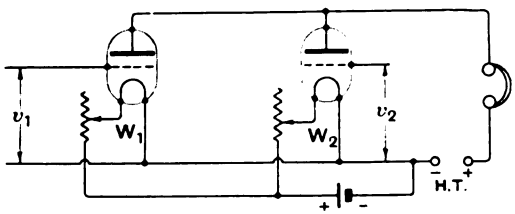

Fig. 1.

The method of making the observation may conveniently be considered in relation to Fig. 1. Here W_1 and W_2 are two valves, the filaments of which are controlled by separate rheostats. The anodes of these valves are connected in parallel through a pair of telephones and a source of H.T., and to the grids of the valves are applied alternating voltages v_1 and v_2 from any source whatever. Then it is clear that if the valves have linear characteristics and identical mutual conductances and if v_1 and v_2 are equal and in opposition of phase then no sound will be heard in the telephones.

In practice the valves can be adjusted so that their mutual conductances are equal, by first arranging that the applied voltages are exactly equal and in opposition of phase and then adjusting the filament resistance of either W_1 or W_2 until no sound is heard in the telephones. If then one of these voltages, say v_1, be replaced by a voltage which varies in conformity with the adjustments of any measuring apparatus, we can bring this voltage into equality and opposition of phase with v_2 by effecting an extinction of sound in the telephones. It is worth noting that such an extinction will in practice only be attainable with the fundamental frequency of the applied voltages if their wave-forms are not identical. This is an advantage since it helps to separate the effects of amplification on different frequencies.

The embodiment of a detecting device of this type for the purpose of measuring the voltage amplification of a valve and transformer is illustrated in Fig. 2, which is a simplified circuit diagram of the test set.

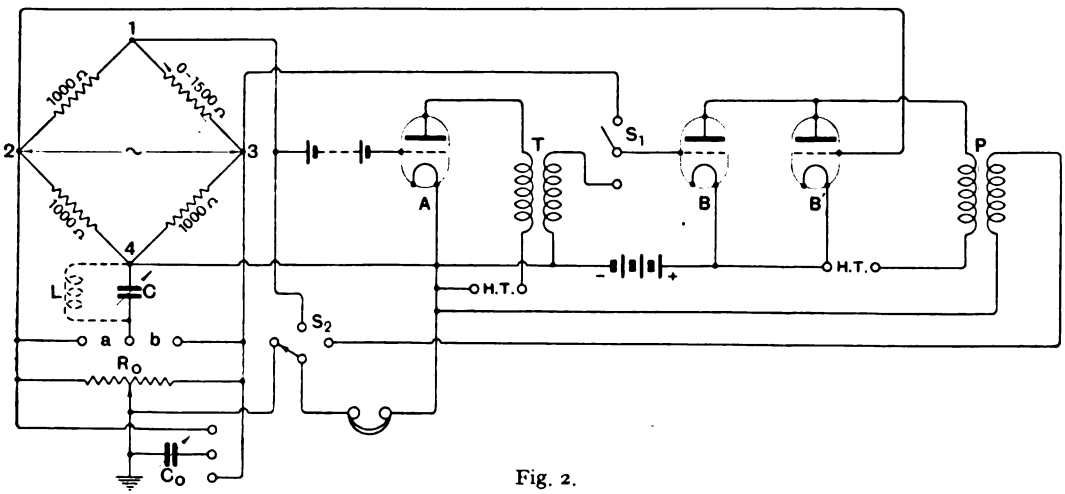

Fig. 2.

Digitized by Google

Here the valve A is followed by an inter-valve transformer T, and the object of the measurement is to ascertain the vector voltage amplification of this valve and transformer. The valves B and B' correspond to the two valves shown in Fig. 1, the anodes being connected in parallel and to the primary winding of a telephone transformer P. To the grid of the first valve is applied a fraction of the input voltage to a bridge, which consists essentially of four arms, three of 1,000 ohms resistance and one in general slightly different from that value. Further, either of the ratio arms of the bridge can be shunted by a variable condenser. Referring to the figure it will be seen that the condenser marked C can be connected either across the arm 2 4 or across 3 4; simultaneously we can throw the bridge out of balance in respect of resistance by the adjustment of the arm 1 3 which is variable from 0 to 1,500 ohms. The grid of the valve B' is permanently connected to point 2 on the bridge and the grid of B can be connected either to the output of the voltage amplifier or to the point 3 on the bridge, a switch S_1 being provided for this purpose.

In order to effect the measurement we must first ensure that the mutual conductances of the valves B and B' are the same. For this purpose we connect the grid of valve B to the point 3 on the bridge, balance the latter exactly, thus making the applied voltages equal and opposite, and by means of the filament resistances of these valves reduce the sound heard in the telephones to zero. Having made this adjustment we throw over the switch S_1 on to the output of the voltage amplifier, then displace the balance of the bridge until the output voltage is such that no sound is heard in the telephones. We then know that the output voltage of the transformer is equal and opposite to the voltage across the arm 2 4 of the bridge and the input voltage to the amplifier is equal to the voltage across the diagonal 1 4. Consequently the amplification ratio is equal and opposite to the ratio of the voltages across 2 4 and 1 4 respectively. These voltages can very readily be calculated.

The resistance R_0 and the condenser C_0 constitute a Wagner earth connection, the arrangements being such that we can reduce to zero the voltage between the point 4 of the bridge and earth under all conditions of measurement. The resistance R_0 is of a total value of about 10,000 ohms and the condenser C_0 in consequence requires to be roughly 1/10th of the value of the capacity across the ratio arms, though it will deviate slightly from this value due to the stray capacities of batteries, etc., for which it is required to compensate.

The switch S_2 enables the telephones to be connected to the bridge diagonals direct, to the earth bridge or to the output of the valves B and B'.

In Fig. 2 an inductance L is shown as a dotted line across the condenser C. This may be used for the purposes of frequency measurement, the resonant circuit L C being

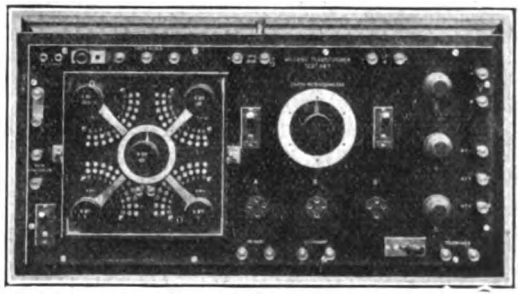

Willans' transformer test set.

shunted across either ratio arm and the condenser and variable resistance arm being adjusted for exact balance of the bridge.

It is important to note the conditions of measurement, namely that there is practically speaking no impedance either in the input grid circuit or in the output anode circuit. In the first case the total impedance of the bridge is of the order of 1,000 ohms, which is negligible in comparison with the grid filament impedance of the valve at even fairly high frequencies. In the second case, since the adjustment is made in such a way that there is zero alternating current flowing through the telephone transformer windings, there is no alternating voltage on the plates of these valves and in consequence no retroactive effect on the amplifier. This reduces the conditions of operation to the simplest possible terms, and if it is required to observe the effect of input or output impedances these can deliberately

Digitized by Google

be introduced in such a manner as not to interfere with the measuring apparatus.

The calculation of the amplification ratio differs according to the position of the condenser C. Referring to Fig. 3, which is a simplified diagram of the bridge itself, if we denote the two positions of the switch as (a) and (b) and the voltages across 2 4, 1 4, etc., by v_{24}, v_{14}, etc., the formulæ can readily be established :—

For switch in position (a) :—

$$\frac{v_{24}}{v_{14}} = \frac{R'+R}{R'-R-j\omega R^2 C}$$

For switch in position (b) :—

$$\frac{v_{24}}{v_{14}} = \frac{R'+R}{R' - \frac{R(1-\omega^2 R^2 C^2)}{1-\omega^4 R^4 C^4} + j\frac{\omega R^2 C}{1+\omega^2 R^2 C^2}}$$

ω being, of course, the angular frequency of the applied alternating voltage.

In by far the greater number of practical cases the second formula can be simplified by neglecting $\omega^4 R^4 C^4$ in comparison with unity in the real term and $\omega^2 R^2 C^2$ in comparison with unity in the imaginary term. We then have, as an approximate formula with the switch in position (b) :—

$$\frac{v_{24}}{v_{14}} = \frac{R'+R}{R'-R+\omega^2 R^3 C^2 + j\omega R^2 C}$$

For the purpose of measuring voltage amplifications of very small value means are provided (not shown on Fig. 2) for connecting the grid of B' to a tapping point in the resistance of the arm 2 4. In this way the voltage amplification is equal and opposite to 1/10th of the ratio v_{24}/v_{14}, this ratio having the values given above.

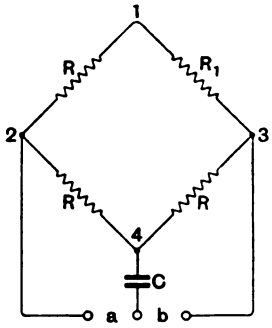

Fig. 3.

Numerous measurements have been carried out with this apparatus on intervalve transformers of all kinds and results more or less exactly in agreement with theory have been obtained. The analysis of a transformer is far more readily carried out in virtue of the fact that the vector ratio of amplification is yielded by the measurement, and it is possible to predict the amplification of the transformer at frequencies beyond the range of convenient measurement by extrapolation.

Digitized by Google

Amateur Radio Telegraphy.

By K. S. Wakefield (2AWD). **[R350**

THIS article has, it is true, only a connection with experimental radio. Its purpose is to help those who would become more proficient at the telegraphy side of it. Though people may say this has nothing to do with experiments, or research, it is a very necessary side and, from what the writer has heard of amateur telegraphy, is on the whole a much neglected one.

Before describing a useful circuit whereby amateurs may either teach themselves or each other to send well and incidentally practice receiving, the writer intends to say something about the telegraphy side.

Sending.

The spring tension on the key should be adjusted to suit the operator and the gap if possible adjusted to something between $\frac{1}{32}$ in. and $\frac{1}{16}$ in. The key should be gripped as shown in Fig. 1, with the first joints of

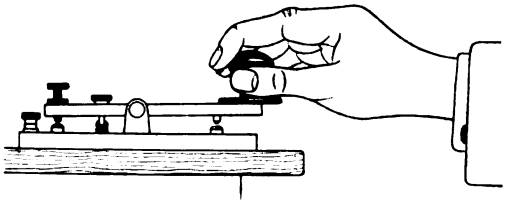

Fig. 1.

the first and second fingers just over the further edge of the key. The thumb should not touch the side of the key but during sending should slide up and down by its side. The movement of sending should be made from the wrist, which should not drop lower for a dash than for a dot, and the forearm kept in a horizontal position. The key should not be gripped but should, rather, rest lightly in the operator's hand. If the key is gripped, elbow too high, or wrist action stiff, cramp will result and the operator will begin to stumble, erase, and send badly.

It should be remembered here that an erasure should consist of eight dots but should never consist of less. If the first four letters of a word have not been sent correctly then the last word sent correctly should be repeated.

Great attention should be paid to spacing. The length, of course, depends on the speed of sending. A very good idea can be obtained of the correct time periods, for letter and word spacing, by just lifting the hand off the key between each letter and lifting it off the key on to the table, between key and sender, between each word. A great fault among amateurs is either to over or under accentuate dots or dashes.

Fig. 2.

The accompanying specimen "RADIO" (Fig. 2) shows the relative lengths of dots and dashes as it should come out on a morse recorder. A dash should be the length of three dots—the space between two beats of a letter as long as a dot, that between two letters as long as three dots, and a word space as long as either five or seven dots (authorities differing on this length).

In practising a very slow speed should first be taken to form letters correctly—this speed can soon be worked up till the operator can send well and easily at twenty words per minute.

Receiving.

As to receiving, this can soon be "speeded up" by receiving radio stations, such as ships or commercial C.W. stations working slow "auto" or hand sending. "Auto," which is to say the sending as transmitted by an automatic transmitter, can be taken as what good sending should be like (the specimen in Fig. 2 was sent by an "auto") and it will be found how easy it is to read. Practice is, of course, had when receiving or working other amateurs, but their quality is so often bad that the writer, who can receive accurately up to about twenty-five words per minute, often finds difficulty in

Digitized by Google

receiving them. It is not inferred here that there are not a great many very good senders among amateur transmitters such as . . . no! we won't give any names!

To learn to receive accurately at a good speed messages should be written. Some people find it easy enough to read plain language in their head far faster than they can write—especially at first. When practising writing, if a word or letter be missed, do not try and fill it in at the expense of losing the next word or two, but go straight on and it will be found that less and less will be lost every time till a good speed can be received accurately.

In taking a speed test, five minutes should be taken as the time. Nothing should be filled in after the word "Stop!" and all words not received wholly correctly scored out. Joining or splitting words does not matter as long as the letters are right. The words remaining should now be counted up, five letters being taken as one word and the total divided by five, giving the speed in words per minute.

Practice Circuit.

For those who are served by A.C. a very useful practice circuit can be made in the following way. There are no outside noises as with a buzzer—which usually "stays put" about five minutes—but a very good note can be heard in the phones. In sending practice the only way to know how you are sending is to hear how it sounds in the phones.

All the apparatus necessary is:—

(1) A good-sized morse key with good heavy contacts.

(2) One or more pairs of high resistance phones.

(3) A paper condenser of about .05μF and

(4) A little home-made iron-cored transformer with a step-up resistance ratio of about 20 to 1. The primary should be of about No. 22 S.W.G. D.C.C. wire and of a resistance of about 1 ohm. The secondary can be wound with the same gauge wire. These are connected as shown in Fig. 3.

The primary of the transformer is connected in series with the electric lamp in the operators' room. It will not affect its brilliancy as its resistance is so low.

Though the mains have a frequency usually of 50 cycles, a note of about 1 000 per second will be heard in the phones. This is due to the fact that the natural frequency of the circuit is now about 1,000 and so a twentieth harmonic of the A.C. is heard in the phones. The note can be altered to suit the operator merely by altering the capacity of the condenser.

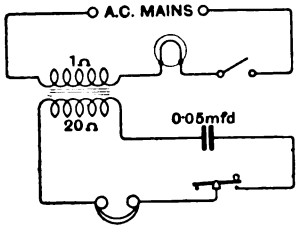

Fig. 3.

It will be seen that if frequency is to be, let us say, 1,000, then, allowing an inductance of about ½ henry, since

$$n = \frac{1}{2\pi\sqrt{LK}}$$

the capacity will be .05μF approximately.

The circuit is simple to fix up and is not at all dangerous as the P.D. across it is very small and there is no direct connection to the mains.

Assuming a 60 watt 240 volt lamp to be used the current would be 60/240 or ¼ amp and if the resistance of the primary is as much as one ohm, the P.D. across it C.R. will only be ¼ volt.

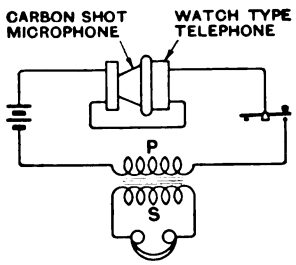

Fig. 4.

It should be added that the foregoing circuit should be successful with D.C. mains, as the commutator ripple is usually sufficient to actuate it.

Another very useful circuit which is within the reach of everyone—mains or no mains—is the following. It is cheap in

Digitized by Google

construction and gives an excellent note, but being dependent on dry batteries is not quite as reliable as the last.

For the circuit see Fig. 4.* The transformer is the same as that in Fig. 3 of last method—phones being connected to the higher resistance winding. A carbon shot microphone is connected in series with an ordinary 24 ohm watch type phone and they are clamped, as shown, with diaphragms facing each other—the key, transformer primary and one or two dry cells complete the circuit.

When the key is depressed current flows through phone and the diaphragm is attracted, thus altering the microphone resistance and hence the current. Phone and microphone continue to react as long as the key is held down varying the amplitude of the current as in Fig. 5. It will be found that the circuit works much better with the battery connected up in one direction than in the other—the correct direction is found by experiment. The amplitude of current "vibrations" depends on the current strength and sensitiveness of the microphone and telephone, and the frequency, apparently, on natural frequency of phone diaphragm. Usually a clear musical note of about 1,000 per sec. is obtained. Any number of high resistance phones can be connected across the secondary.

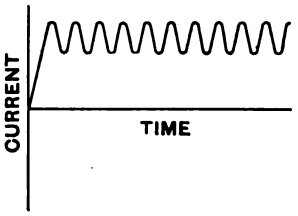

Fig. 5.

It is understood that a device of this nature is used by 2LO for his tuning note and by many tonic train stations.

It is hoped that this little article, with the help of the practice circuit described, may be of some assistance in the bettering of amateur radio telegraphy.

* This is an application of the well-known microphone hummer.—G.W.O.H.

Memorial to Hertz at Karlsruhe.

ON the 29th of last October and the following days the Technical College at Karlsruhe celebrated the centenary of its foundation. Suitable orations were delivered dealing with the history of the College, and with the part it has played in the scientific achievements of the last hundred years. Honorary degrees were conferred on a number of leading scientists; but to all of our readers the most interesting event of the celebrations took place on the 30th, when a memorial to Heinrich Hertz was unveiled. We have much pleasure in reproducing a photograph of the memorial. The inscription may be translated as follows:

IN THIS PLACE
HEINRICH HERTZ
DISCOVERED THE ELECTROMAGNETIC WAVES
DURING THE YEARS 1881-1883.

Digitized by Google

The Propagation of Radio Waves. [R113

Paper read by Mr. J. HOLLINGWORTH, M.A., B.Sc., before the Wireless Section, I.E.E., on 3rd February, 1926.

Abstract.

THE paper is communicated by the Radio Research Board, the work having been done for the Board's Committee on the Propagation of Waves.

In the introduction it is pointed out that work on signal strength measurement can be approached in two ways. The first is primarily concerned with obtaining data for reception and transmission purposes, and is mostly concerned with long distance transmission under working conditions. The second is of viewing the measurements chiefly as a convenient means of examining the electrical state of the intervening medium. The latter has been the guiding principle in the work described.

The apparatus used is not dealt with, it having been described in a previous communication.* The only notable difference is the substitution of a Dye transformer for a calibrated mutual inductance.

The features of the experiments are: (*a*) Distances are all comparatively short; (*b*) Observations have been simultaneous whenever possible; (*c*) Only daylight transmissions have been considered. This programme was adopted to reduce the number of independent and uncontrollable variables. Short distance reduces uncertainty with regard to variables, and removes the special cause of difficulty in long distance work in which the path contains both day and night sections. It also tends to higher accuracy of measurement owing to the more powerful signals in relation to disturbances.

Four receiving stations have been engaged on the work and have made routine observations since June or July, 1924. The earlier measurements were all made, on U.R.S.I. transmissions, those most used being Leafield (12.350m. at 14.00 G.M.T.), Nantes (9,000m. at 14.15), and Stavanger (12,140m. at 10.00).

The results from all stations have been reduced to a fixed aerial current, and each set averaged weekly. Daily results proved too cumbrous, while monthly averages might have obscured transient results of shorter period. The study of the curves suggests that the weekly meaning has been justified.

Fig. 1 of the paper (not reproduced here) gives the weekly averages of the observations on Nantes and Leafield at the four stations, from June, 1924, to December 1925. Several notable features appear. In the first months Nantes was stronger at Manchester (695km.) than at Slough (485km.). When variations occurred they usually appeared at all stations but not necessarily in the same direction, *i.e.*, an unusually high value at one station was generally accompanied by a low value elsewhere.

In September, 1924, day-to-day changes became much larger. In October big changes began to occur, culminating in sudden and enormous variations in the week 25th October to 1st November, the daily logs showing the majority of the changes between 27th and 30th October. Comparison is drawn between these, and results shown by Professor Mesny in *L'Onde Electrique*, and with the results shown in the Marconi Company's recent paper. (Abstracted in *E.W. & W.E.*, December, 1925.) In the following weeks, although day-to-day unsteadiness was marked, there was no definite return to summer values. In spring, 1925, signals gradually steadied down to practically the same values as in the previous summer. In autumn, 1925, the same abrupt change occurred again on practically the same days.

It is hardly possible to avoid the conclusion that these changes were due to some main cause operative over a large area; and the possibility is also suggested that all signal strength variations might be due to this cause, differing in degree rather than in kind.

Differences of land conductivity are dismissed by the fact that signals from Leafield at Glasgow, and from Stavanger at Aberdeen, were practically equal, although the former path is entirely overland and the latter over sea.

* *J.I.E.E.*, 1923; Vol 61, p. 501.

Digitized by Google

The paper then proceeds to consider the possibility of accounting for all the effects by a single cause, by considering the distribution in terms of Intensity and Distance The curves of Fig. 4 * are shown to illustrate the conditions before and after the transition period referred to. The actual intensities at each station being very different, the ordinates are given in the form of the ratio of the monthly average intensity to the mean annual intensity at that point. The relative changes at each station can thus be studied on a common scale. The characteristic features of these curves are the alternation of high and low values, and the complete reversal of form between the two months. They immediately suggest something in the nature of an interference phenomenon, and subsequent work has been chiefly to study this effect under the most favourable conditions.

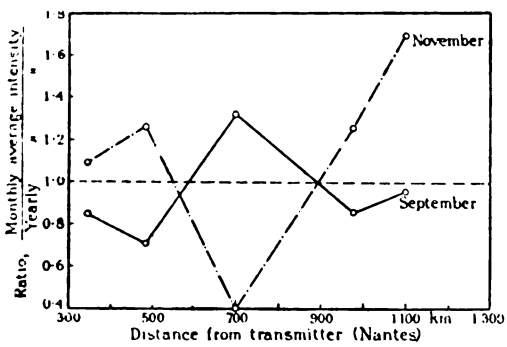

Fig. 4.

In order to make fuller investigation of the distance effect, provision was made for a portable set to provide a large number of points than can be obtained with fixed stations. As such work would necessarily occupy a few weeks, it could only be done at a time of the year when the day to day consistency was highest, *i.e.*, mid-May to mid-September. The U.R.S.I. signals not being suitable for a variable programme, the choice of a transmitting station finally fell on St. Assisse (FT., 14,350m.). Preliminary tests showed that the signals from this station usually maintained a steady value,

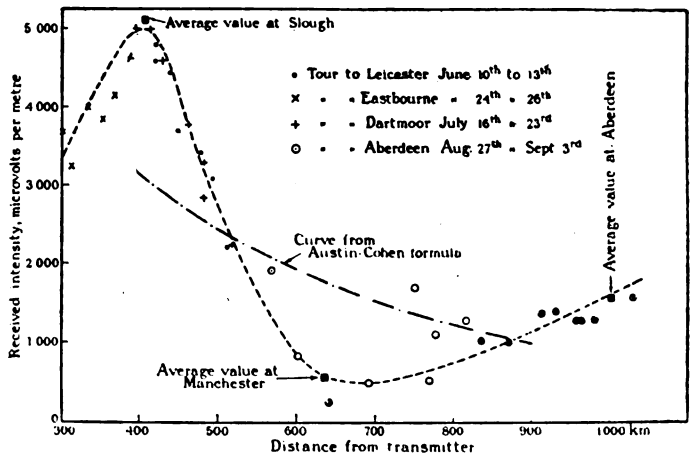

Fig. 5.

while it was also found that the strength at Manchester was only one-third of that received at Aberdeen, suggesting an interference phenomenon.

Fig. 5 gives the Intensity/Distance curve for a series of tours in the summer of last year.

In considering these results the paper briefly reviews the phenomenon of interference, and starts with the well-accepted Heaviside layer as an explanation. The simple case of a direct and indirect wave from *A* to *B* is illustrated in Fig. 7. On account of lack of knowledge as to the physical nature of the layer, it is impossible to say whether the effect is strictly one of reflection or refraction or, as seems likely, something of an intermediate nature.

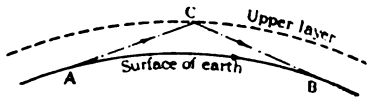

Fig. 7.

From consideration of Fig. 7, the distances at which maxima and minima should occur at various distances and for various heights of layer are plotted in Fig. 8 for the wavelength of FT.

* The author's original figure numbers are used throughout this abstract.

Digitized by Google

Although the actual intensity at any point depends on the attenuation, the positions of maxima and minima are independent of the attenuation of either of the waves. Comparison of Figs. 5 and 8 suggest that the conditions are satisfied by a height of 75km. giving a maximum at 430km. and a minimum at 640km. From Fig. 4 (corrected for the

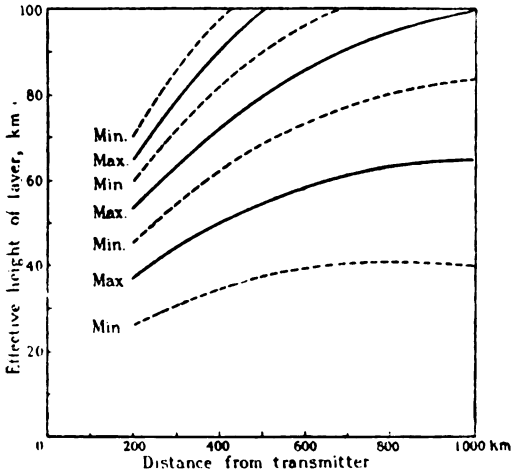

Fig. 8.

appropriate wave-length) a height of 72km. is suggested for September, and 85km. for November.

Present results are not sufficient to give details as to the physical nature of the layer, especially as to sharpness of surface, but it appears that the "effective height" would be different for different wave-lengths.

The results are then considered from the aspect of seasonal variations, *i.e.*, (i) comparison of summer and winter and (ii) comparison of the same period in successive years. The results of the four stations appear to group themselves into two sections, (A) May to September of very marked stability and (B) October to May with values differing largely from those of summer and with very marked day-to-day instability. As the marked change at the end of October seems to be consistent with a rise of layer height from 75 to 90km. it seems natural to suggest that some of the winter variations are due to the same cause. To examine this more fully a daily analysis is in progress but the preliminary arithmetical work is very heavy and it is not possible to say whether the analysis will be successful. From Fig. 8, however, it is clear that a change of height of only about 10km. may be sufficient to convert the signal at a given point from a maximum to a minimum.

Sunset effects are then considered, and illustrated by curves of intensity against time, for continuous observations over a few hours. Some results are shown in Fig. 9. Fig. 10 shows a case of remarkable consistency when two observers at stations 24km. apart, made the observations shown, each being unaware that the other was engaged on measurement. From these it is seen that the "sunset effect" cannot be classed under the general heading of "night increase." From comparison of Figs. 8 and 9, the variations are all explicable on the basis of a rise in effective layer height from 75 to 90km.

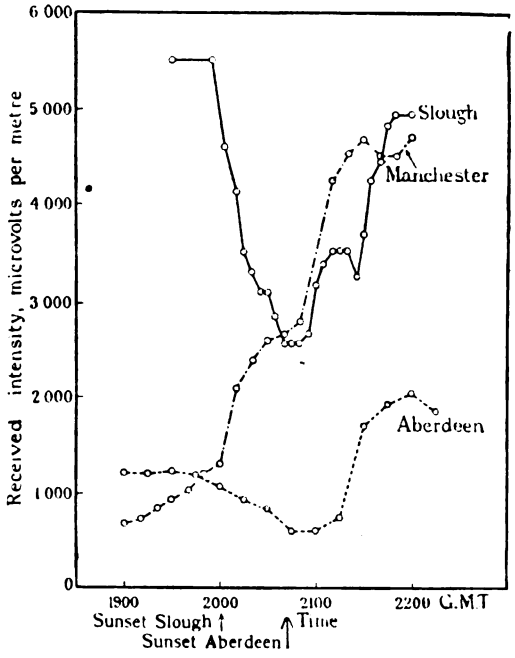

Fig. 9.

From the results it is possible to calculate the reflection co-efficient of and the angle of incidence on the layer. Results on St. Assisse, for the four stations are tabulated, showing reflection co-efficients varying from 0.16 to 0.42 at angles of incidence from 68.5° to 79.5°.

Digitized by Google

Lastly the paper considers the extension to long distances and short waves. The interference phenomenon discussed have an upper limit, but the idea of multiple reflection cannot be excluded. The signal from a distant station would thus consist of the vector sum of a series of multiple reflections, but their relative attenuations

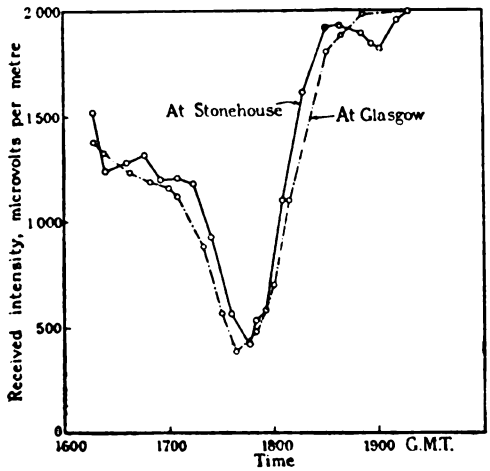

Fig. 10.

would probably allow only two or three to survive to a measurable extent.

There is danger in applying these results to wave-lengths below 1,000 metres, the difference in frequency being so great that there is no doubt but that the observed phenomena would be entirely different.

DISCUSSION.

In the discussion, **Prof. E. W. Marchant** dealt with observations made at Liverpool on Nantes and Nauen early in 1924, illustrating the measurements, and other measurements of signal strength variations by slides. He doubted the wisdom of weekly averages, and suggested that daily figures would be useful, especially in helping estimation of the height of the layer from day to day. He did not agree in attributing all the variations to interference due to reflection from the layer.

Dr. Reyner expressed appreciation of the work done under the Radio Research Board, including that of the author and his co-workers. He considered that signal strength measurements could now be made with more accuracy than could be given at the transmitting station measuring, say, 200 amperes. Increased accuracy at the transmitting end was now required.

Mr. T. L. Eckersley congratulated the author on the scientific spirit of the work. Referring to what he called the "November effect," he stated that it had been noticed by Captain Round as far back as 1911. The author by working at short distances had been able to separate different effects, *i.e.*, change of attenuation and the height of the layer. He suggested that the November effect was due to increase of both of these. He differed from the author's conclusion on the height of the layer as deduced from the maximum and minimum of the tour results. He held that it was impossible to calculate the path unless the change of phase was known. This change of phase was apparently sometimes of considerable value. From much information available he favoured a height of the order of 50km as a more likely value than the 70km. suggested by the author.

Mr. J. E. Taylor entirely disagreed from the inferences drawn from the observations, and suggested that treatment of propagations from the point of view of guided waves had received scant attention. He referred to waves along wires and their small decay after a hundred or a thousand miles. What was the difference in the case of a sheet conductor? The results observed were, he held, due to two waves, one direct and the other travelling round the earth, causing interference depending upon phase. He considered that this and all similar work was a waste of energy, time and money.

Dr. R. L. Smith Rose held that much information was now available in connection with the layer. He referred to work by Prof. E. V. Appleton and Mr. Barnett,* also by Mr. R. H. Barfield and himself, showing that waves do arrive at an angle to the earth, proving their arrival from an upper region. He dealt with separate measurements now in progress, of the electric and magnetic forces of the wave, and showed that the results could only be obtained by the arrival of the waves at an angle, and that this angle could be calculated from the results of the measurements. Curves of direction finding variations were illustrated, as were curves of d.f. variations with signal strength variations for the same period. These showed considerable correspondence. It was suggested that the variations were due to rotation of the plane of polarisation of the waves.

Mr. E. B. Moullin asked for more detail of day-to-day variation (*c.f.* Prof. Marchant), especially during the period of the "November effect." Results from a whole year might well be worth a detailed Fourier analysis, which *should* yield interesting information. He differed from Mr. Taylor as to the existence and effect of the layer.

Mr. Hollingworth briefly replied to some of the points raised in the discussion. Daily values were useful and informative, but were too bulky for publication. They were available however to anyone who wanted them. He agreed with Dr. Reyner as to the need for greater accuracy of the transmitter constants.

A cordial vote of thanks to the author was accorded on the motion of the Chairman (Major Binyon).

* See abstracts in E.W. & W.E., February, 1926.

Digitized by Google

Rectifiers for High-Tension Supply.

Part VII: High-Vacuum Rectifiers—The Two-Electrode Valve.

(*Conclusion.*)

By R. Mines, B.Sc. **[R355.5**

I.—General Survey.

WE have now covered the ground of rectification by devices using solid, liquid, and gaseous conductors (both dense and rarefied).

The first class of devices are primarily switches, which have to be operated in accordance with the control it is desired to exercise on the current flow.

In so far however as any such device can be made to operate itself automatically, by means incorporated in the complete apparatus, it may be called a valve—a valve being, in electrical parlance, a device that permits current to flow through it in one sense only when an alternating P.D. is applied to its terminals (*i.e.*, a "perfect rectifier). The two devices belonging to the last two classes however are in a different category; for once the essential asymmetry is established in them they behave after the same fashion as a valve—though many are but "imperfect" rectifiers.

II.—The Fourth Class.

There is yet another class of device that uses no material conductor at all—current flows through it solely by the passage of electrons from one electrode to the other.

Now it may be said with truth that this is just what happens in the "switch" type, the electrons flowing along whatever complete metallic path they may find; but there is this important difference, that in the new class to be considered, there is no material body present to facilitate the passage of the electrons.

On the contrary, in fact, it is found essential to get rid of all matter possible from the space where the electron flow is to take place, by exhausting it to as high a vacuum as is obtainable.

The figure usually reached commercially* gives the electron a mean free path of nearly a yard.

An alternative approach to the subject of the high-vacuum rectifier is permissible —to regard it as a development from the rarefied gas conduction types, by exhaustion far beyond the point where the quantity of gas present is sufficient for useful ionisation.

Now it has been postulated that conduction is by electron flow only—this implies the presence of some means of liberating electrons into the evacuated space.

The mere presence in this space of a body carrying free electrons—a conductor—is not sufficient because the boundary conditions (a kind of surface tension effect) prevent "evaporation" of electrons from its surface.

Some of the methods of releasing electrons from an electrode surface have already been considered; for example, the one always present in gas discharges, positive ion bombardment. Obviously this method is not available in high-vacuum apparatus.

III.—Alternative Sources of Electrons.

If an electrode is made from a suitable metal (preferably, strongly electro-positive, such as an "alkali" metal), then by virtue of the *photo-electric effect* electrons may be liberated from its surface by intense light falling upon it. In general this method is not used, partly because it is not practicable to use an appropriate electrode material, but chiefly because the supply of electrons thus obtainable is far too meagre.

Another possibility would be to provide the electrode with a layer of *radio-active material* that emits β-rays (which are high-velocity electrons). Owing again to the minute supply, also to the high speed of the electrons and to the emission in addition of α-rays (helium atoms, causing disintegration and lowering the vacuum) and γ-rays (penetrating X-rays, that are dangerous apart from their secondary effects), this method has not been used.

There remains the *thermionic emission*. The nature of this phenomenon has already been described; its application to the high-vacuum rectifier is not different, except that heating of the active electrode must

* The "gas pressure" is in the neighbourhood of 10^{-8} atmosphere.

Digitized by Google

always be by independent means—it is not possible to have a self-maintaining discharge so long as the high vacuum is preserved.

IV.—Emission Characteristics of the Filament.

We have implied* that the emission of negative ions increases rapidly with rise of the temperature of a metal. Various investigators have formulated equations representing the relationship between these two quantities, and mostly they agree that the emission current is inversely proportional to the quantity $\epsilon^{b/T}$ (where T is the absolute temperature of the metal, b is a "constant" that varies only slightly between different materials, and ϵ is the "base of natural logarithms"), and that this is the predominating factor.†

The occurrence of T in the denominator of the index means that this quantity decreases with increase of T, but the reverse proportionality expresses the fact that the emission current increases with increase of temperature.

The quantity C is usually in the neighbourhood of 50,000 degrees, and the working temperatures used are usually round about 2,500 degrees; the quotient of these two is 20, which is the *index* of ϵ. This expresses the fact that the variation of this factor (and hence the emission) with change of temperature is extremely rapid.

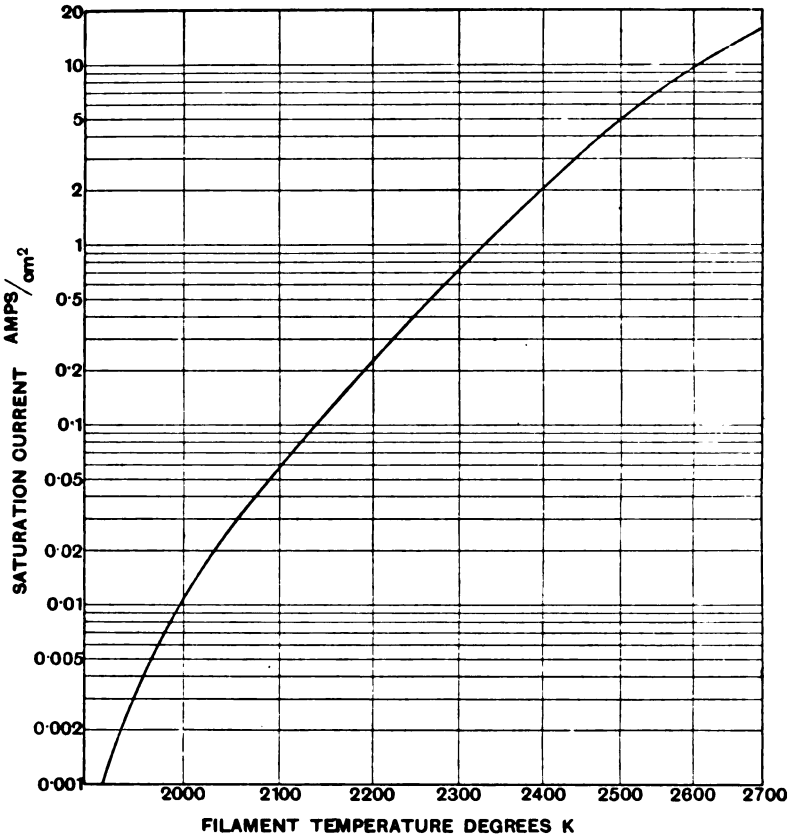

Fig. 1.

The relation is depicted in Fig. 1. The emission shown is the maximum current it is possible to draw from the filament,

* E.W. & W.E., p. 898, November, 1925.

† Richardson's equation introduces in addition the factor T^2, and one derived by Dushman and Richardson—the factor $\sqrt{T}$. Inspection of the curve given (Fig. 1), however, shows that if the relation be represented by $i = kT^n$, the index n is about 25 over the middle of the range—so it does not matter much whether 2 or $\frac{1}{2}$ is added to it.

Digitized by Google

and is called the "saturation current" corresponding to the temperature.

V.—Asymmetry.

The obvious way of making the high vacuum tube into a rectifier is to provide one only of the electrodes with means of emission of electrons, the other electrode being left incapable of emitting them.

Therein lies one of the chief advantages of this kind of apparatus over many of the other forms of rectifier that we have discussed —because the inactive electrode can be made *totally* inactive, and the "inverse current" made zero; the device is a "perfect rectifier" or valve.

This apparatus was originally given the name "Kenotron," whose Greek roots mean "empty appliance."

VI.—Form of Electrodes.

To provide for independent heating, accomplished most conveniently by passing an electric current through it, the active electrode is in the form of a filament, made of a refractory conductor, usually tungsten, as in the Tungar Rectifier. There are differences, however, the reasons for which will be discussed presently.

The inactive electrode again is different from that in the Tungar type. In this latter, as in all rectifiers using a gas discharge, there is a tendency for the discharge to concentrate into a small volume, since this favours intense ionisation—this is the more noticeable the heavier the discharge, and increases also with increasing gas pressure. This tendency leads to a concentration of the electrodes into a small size (provided the necessary heat dissipation permits it).

In the high-vacuum rectifier on the other hand these conditions are quite absent. In fact, due to their own mutual repulsion, the electrons drawn off from the heated filament tend to distribute themselves throughout the surrounding space—they being its sole occupants.

It is partly on this account that the inactive electrode is shaped to enclose the filament as much as possible. In the larger sizes the wire filament is doubled or looped; this enables both the end leads to be brought to one end of the rectifier (which is almost essential for a high tension rectifier) and simplifies the spring mounting that caters for the thermal expansion of the filament.

VII.—The Space Charge Effect.

Let us now consider the results of applying a P.D. between the electrodes in the "conductive" direction, *i.e.*, making the inactive electrode positive so that the electrons are "drawn off" from the filament.

Reference has been made to the mutual repulsion of the electrons tending to give them a uniform distribution in space. This distribution of negative charges constitutes a "space charge."

Actually the distribution is not uniform. The first reason for this is electric: neglecting for the time being the reaction of the "space charge" on the electric field, and assuming the latter is uniform in strength over the space between the two electrodes, the electrons will be subject to a uniform accelerating force, with the result that their velocity will be proportional to their radial position or distance from the filament, and their density will be inversely proportional to their radius.

A second reason, which is geometric, applies in the case of a filament lying along the axis of a cylindrical outer electrode; assuming for the moment, the electrons move outwards with constant velocity, their density in space will be inversely proportional to their radial position. This effect is in the same direction as the other, tending towards a higher electron density (*i.e.*, a higher value for the "space charge") near the filament than further from it.

Now we have met space charge before, in gas discharge devices, where it takes the form of a preponderance of positive ions—this occurring in close proximity to the negatively charged electrode and causing a high value of electric field and a large potential drop called the "cathode fall."

In the high-vacuum rectifier however, the space charge is negative, and because there are no positive ions, it extends right up to the positive electrode. This gives rise in the same way to a considerable increase of the electric stress near this outer electrode. This can occur only at the expense of the electric stress in other parts of the field, in a manner similar to that occurring in the point and plate discharge, previously described—in fact, when the supply of electrons is copious and the P.D. between the electrodes is not great, it commonly happens that the electric field

Digitized by Google

changes sign in the immediate vicinity of the filament. In other words there is a place near the filament where the absolute potential is more negative than that of the filament itself—it does not reach the filament potential and begin to grow more positive until a place is reached still farther from the filament surface.

The most important result of this is the retarding effect of the reversed field at the surface of the filament which exerts a force on the electrons tending to drive them back into the filament instead of to draw them out.

This condition of affairs can only be maintained when the P.D. is high if the filament is strongly heated so that a sufficient proportion of the "thermions" are emitted with velocity enough to carry them over the "brow of the hill" represented by the negative to maximum of potential.

VIII.—Inherent Stability of the Discharge.

If the filament is not hot enough the retarding field succeeds in choking down the flow of electrons between the electrodes (see Fig. 2); but it is this flow that maintains the electron density, *i.e.*, the space charge, which is turn is the cause of the retarding field.

The two factors are not helping each other, but are in opposition over the whole range

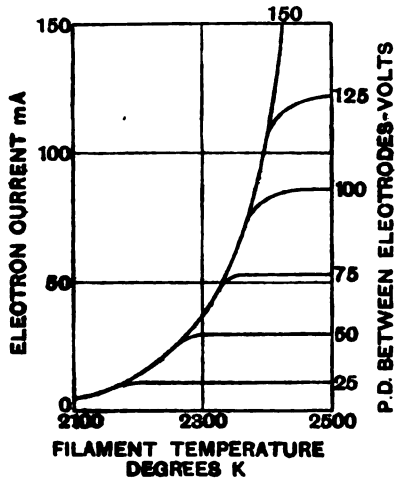

Fig. 2.

of their variations. Therefore however one factor may be varied by an external agency, the other will adjust itself to the corresponding value and will "stay put"—a condition of *stable equilibrium* will be attained.

Herein lies a great advantage of the high-vacuum discharge over those dependent on gaseous ionisation—for these latter we

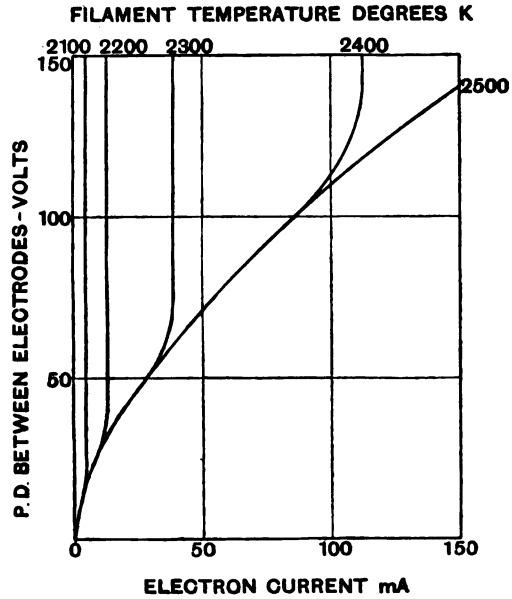

Fig. 3.

have seen behave in an unstable manner—until some additional factor is brought in to control their behaviour.

The chief practical value of this feature is that it permits a number of the rectifiers to be operated in parallel, since they will automatically share the load in correct proportion without the use of special regulators, stabilising resistors or reactors.

IX.—Effect of the P.D.—The Characteristic Curve.

It follows from the emission characteristics dealt with in Section IV, that it is impossible to exceed the saturation current, no matter how high the P.D. applied.

For intermediate values of P.D. the current is limited by the space charge in the manner described above. The relationship is shown in Fig. 3—this is called the *characteristic* of the apparatus. Note that nowhere is there a negative slope, which would be indicative of instability in the discharge.

It has been shown (by Child) that over this range the electron current is approximately proportional to the 3/2 power of

Digitized by Google

the P.D. between the electrodes. It follows then that the expenditure of power in driving the electrons against their mutual repulsion varies approximately as the 5/2 power of the P.D. Care has to be exercised however in applying this result in calculating the losses, because the law is not fulfilled for the first and last portions of the characteristic. Thus when the P.D. across the rectifier is small compared with the drop along the filament due to the heating current, the effective value of the field becomes widely different for different parts of the filament. Another cause of discrepancy is the random distribution of velocity among the electrons given off by the hot filament.

X.—Losses in the Rectifier.

The primary loss of power in the rectifier is that described in the last section. This loss appears wholly as heat at the inactive electrode, which, as a consequence, rises in temperature until its heat radiation becomes sufficient to produce equilibrium.

There is also a secondary item of power on the debit side, viz: the power required to heat the filament. This item is independent of the load, and makes for poor efficiency therefore at light loads. Apart from this aspect though, whenever small powers are required to be rectified the filament power is found to be disproportionately large and this fact militates against the use of the thermionic valve for many purposes. Its real field of usefulness, from the efficiency point of view, lies in extra-high-tension work, such as the supply of steady power to X-ray tubes.

XI.—Points of Design.

It is assumed that from a knowledge of the load conditions of the rectifier system the power that must be dissipated by the inactive electrode can be determined. Now it has been specified as an essential condition for maintenance of rectification, that this electrode shall remain incapable of emitting electrons. This involves a definite limitation of its temperature, which is in direct opposition to the requirement that the temperature shall rise to dissipate the power as radiant heat (there being no convection in the high vacuum). In practice it is found that a bright red heat is permissible—for a tungsten or a molybdenum electrode the safe limit of temperature is about 1,600°*, which corresponds to a power dissipation of about 10 watts per square cm. This figure leads automatically to the radiating area of the electrode.

The shape of this electrode is the next consideration. Child has shown that for a given electron current, the potential drop in the rectifier, and hence the power loss due to space charge is proportional to the 4/3 power of the distance between the electrodes, with the outer electrode as a flat plate; with it as a cylinder, it is proportional to the 2/3 power of the distance. From this it appears that when a large power dissipation necessitates a large electrode, the cylindrical form is the more efficient, since the loss *increases less rapidly* with increase in dimensions. On the other hand for small rectifiers handling a very few watts, the flat plate type is better, because the loss *decreases more rapidly* with decrease of dimensions. In practice a compromise is usually effected in the latter case—the outer electrode is made like a flattened cylinder (not elliptical, but with plane sides) and the filament is a broad "V" instead of having its limbs nearly parallel.

The proportions of the outer electrode are partly dependent on the filament. Evidently the narrower the cylinder or the closer the plates the better from the point of view of space charge loss. In general there is a limit to the length allowable and this fixes a minimum diameter to give the predetermined radiating area. There is another consideration however which is of greater importance both in extra-high-tension rectifiers and in those of small dimensions. It is not possible to mount a filament accurately in the desired position—in practice there is a certain minimum error. The unbalanced electrostatic force on the filament is proportional to its percentage eccentricity and to the field strength, both of which factors are inversely proportional to the cylinder diameter or the plate separation. The degree of instability of the filament therefore varies inversely as the square of this dimension—so it is not safe to make it too small.

* At this temperature the actual emission is still under 0.02mA/cm².

Digitized by Google

Similar considerations of mechanical stability control the proportions of the filament itself—the ratio of length to diameter should not exceed a safe figure.

Their product, or the surface area, is predetermined by the maximum value of the current pulse that the rectifier must pass, once the working temperature has been decided upon. This latter factor is governed by the emission characteristic of the material just as with the other electrode—except that in this case the *highest* temperature possible is desirable. The practical limit is imposed by the useful

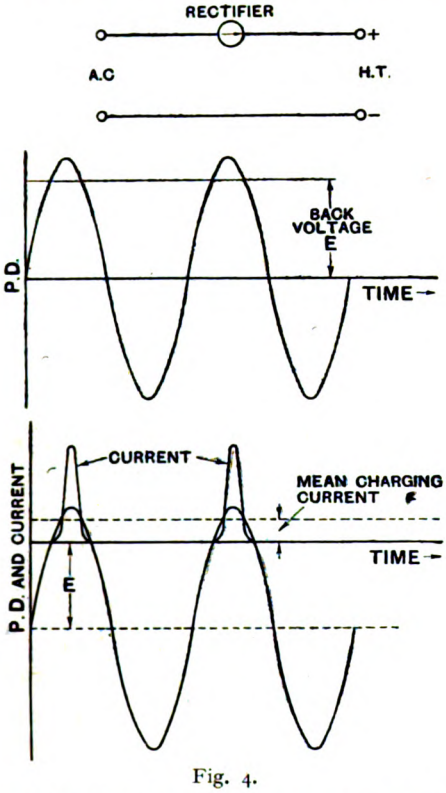

Fig. 4.

life of the filament—since as the temperature is raised, atoms of the filament material as well as electrons evaporate from it, causing it to waste away.

XII.—Conditions of Efficient Operation.

Reference to Fig. 4 reveals certain facts concerning the supply of power to a steady D.C. circuit through a rectifier, two of which become of special importance when a thermionic valve is used.

First is the relatively small value of P.D. available for pumping the current through the rectifier and into the output circuit, as compared with the P.D.s on the input side. This makes it essential to ensure

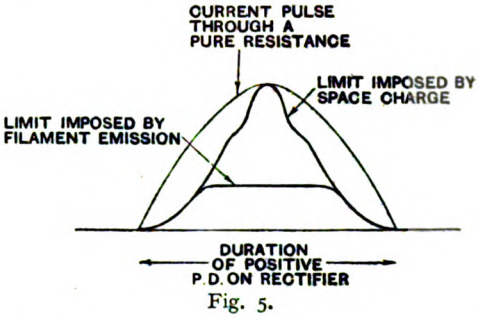

Fig. 5.

that the space charge shall not impose any undue limitation, merely from the point of view of getting the current through, apart from the question of wasted power.

Secondly there is the very high maximum value of the current as compared with its mean value (which latter is the value determining the *power* passed by the system). This makes it essential that there shall be no limitation imposed by sufficient emission not being available from the filament, if the full power is to be passed.

Fig. 5 shows diagrammatically what happens in these two eventualities.

When a thermionic rectifier supplies a resistance load or there is a considerable resistance drop in a filter circuit or a safety resistance, then insufficient filament emission involves serious consequences. For when the current falls off, the resistance drop falls off; and the surplus P.D. comes across the rectifier automatically. The extra power spent in the rectifier as a result appears as heat at the outer electrode, and if this becomes too hot, rectification will cease and the "valve" will short-circuit the output and input on the reverse half cycle. (This may arise either from spoiling of the vacuum or from emission from the heated anode.)

Should the design of the rectifier or the circuits in which it is used render this condition a safe one, then we find that the valve constitutes a very valuable safety device, in so far as it limits the amount of current that can be drawn from the output terminals in the event of a short-circuit.

Digitized by Google

Correspondence.

Letters of interest to experimenters are always welcome. In publishing such communications the Editors do not necessarily endorse any technical or general statements which they may contain.

Supersonic Patents.

The Editor, E.W. & W.E.

SIR,—We must apologise for again referring to the matter of our patents covering the supersonic principle of detection, but we do not think it would be just that Mr. C. E. B. Wilkins' letter to you should contain the last word on the subject in your correspondence columns.

We have no hesitation whatever in saying that Mr. Wilkins and his adviser's interpretation of the patent law, as it exists in this country at the present time and applied to the matter under discussion, is erroneous.

There is absolutely no doubt whatever as to our position and our rights in this matter, and, as stated before, while we are perfectly willing to grant a licence under this patent to anybody who asks for it and pays the royalty of 30s., we have every intention of proceeding against anyone who infringes the patent.

Standard Telephones and Cables, Ltd.,
F. S. A. P. DISNEY, Secretary.

Another Question of Nomenclature.

The Editor, E.W. & W.E.

SIR,—I was very glad to see the article by Prof. Howe in the February number of E.W. & W.E. If I may be allowed to use such a frivolous expression, I should like to say that Prof. Howe's suggestion fills a long-felt want.

The application of the term impedance to the expression dV/dI, however, is not the only way in which this unfortunate word has been misused. As pointed out by Prof. Howe, its proper meaning, that is to say the meaning in which it has been used for many years in ordinary electrical literature, is to describe the quantity obtained by dividing the terminal voltage of an A.C. circuit by the current. Mathematically, the impedance is given by the equation : *

$$\text{Impedance} = \sqrt{R^2 + (L\omega - 1/C\omega)^2}.$$

It will be seen that this expression involves a combination of resistance and reactance, but in all cases it is a real quantity.

In making a rigid analysis of alternating current problems it is necessary to take account not only of the magnitude of the various quantities involved, but also of their phase relationships. The use of imaginary quantities in this connection is very convenient, and the method consists in regarding reactance as an imaginary resistance. The resistance R and the reactance

$$\{L\omega - 1/C\omega\}$$

are then combined to form the complex quantity

$$\{R + j\,(L\omega - 1/C\omega)\},$$

and problems are dealt with by means of a generalised form of Ohm's Law which is extended to apply to the complex quantities which enter into the equations.

The quantity $\{R + j\,(L\omega - 1/C\omega)\}$ has been referred to by various writers as "generalised resistance," "operator impedance," "operator," and so forth, and the appearance of these varied titles to describe a quantity which is constantly occurring in the mathematical work is a source of some annoyance to the ordinary reader. But when our old friend "impedance" is added to this list of titles the present writer feels that it is time to record a protest. The use of several titles for one mathematical expression is bad enough, but to use the same word to describe several different and inconsistent ideas is to invite muddle and confusion. The writer has therefore been roused by Prof. Howe's example to place on record this protest against any extension of the meaning which has always been attached to the word impedance. It remains to suggest a suitable title for the expression already referred to.

In ordinary algebra x and y are employed as variables, and in standard mathematical works dealing with the properties of the operator $(x+jy)$ it is commonly referred to as a complex variable. No departure from accepted nomenclature is therefore involved in calling

$$\{R + j(L\omega - 1/C\omega)\}$$

a *complex resistance*, and it is suggested that this title is both convenient and descriptive. The writer ventures to hope that it will be generally adopted.

K. E. EDGEWORTH, Lt.-Col.

Dame Melba's Farewell.

The Editor, E.W. & W.E.

SIR,—Amid the sadness of bidding good-bye to so many good friends of mine up and down the country it has been a pleasure to note almost everywhere a quickening in musical appreciation. To-day there are gratifying signs that the British audience begins to hear as well as listen ; and if the result is to be a musical revival the credit for it will be due in no small degree to men like Hallé, Henry Wood, Eugene Goossens, Landon Ronald, Albert Coates, Hamilton Harty and a number of other pioneers in London and certain provincial centres.

Yet mainly, so it seems to me, the secret of this new interest is to be found in the astonishing enlargement of the audience for music accomplished by the gramophone and broadcasting. Although I believe I was the first prima donna to make a gramophone record and the first to broadcast, I have not, whilst recognising the possibilities of these devices, ever accepted either of them uncritically, and I am well aware of the flaws in wireless as that science is practised to-day. But, just as I have followed the gradual perfecting of the gramophone, so I think one may look forward to like improvements in wireless. Broadcasting and the gramophone are certainly the two most eloquent missionaries to the musical heathen in our midst.

London, S.W.1. NELLIE MELBA.

* This formula is only for the case of resistance inductance and capacity connected in series.—G.W.O.H.

Digitized by Google

From the World's Wireless Journals.

Abstracts of Technical Articles.

R000.—GENERAL PRINCIPLES AND THEORY.

R040.—NOTES ON WIRELESS MATTERS.—L. B. Turner. (*Electrician*, 8th January, 1926.)

A brief review of technical progress in 1925. Low-powered short-wave communication is first considered, including the Government stations under construction by the Marconi Company. Tuning-fork control of radiated frequency is then reviewed, with reference to the arrangement which has been in use at Northolt for some time and to the same plan in use at the new Rugby Station. The author then considers the interference problem in broadcasting, and the conditions to be fulfilled for non-interference. After a brief note on Transatlantic telephony, the paper concludes by reviewing recent research work, more especially on the upper ionised layer and its effect on propagation.

R100.—GENERAL PRINCIPLES AND THEORY.

R113.—AN INVESTIGATION OF TRANSMISSION ON THE HIGHER RADIO FREQUENCIES.—A. Hoyt Taylor. (*Proc. I.R.E.*, December, 1925).

The chart is a preliminary attempt graphically to summarise ranges for wireless *telegraphic* communication at various frequencies, with 5kW in an average aerial and for communication between points on the same meridian. For East and West or other lines of communication account of time difference (and transmission conditions) must be taken. The chart covers the ranges for 3,000 metres down to 15 metres and shows values for daylight and for night in summer and in winter, with references as to regions of unreliable communication, insufficiently explored, etc. The chart is based on experimental data of the U.S. Naval Laboratory, amateurs, commercial and other government sources.

R113.—DIAGRAMME DES CHAMPS ELECTRIQUE MESURÉS À MENDON, PENDANT LE DEUXIÈME TRIMESTRE, 1925.—U.R.S.I. Communication. (*Onde Elec.*, December, 1925).

Five curves showing measurements of signal strength in microvolts-per-metre, made at Mendon on the following transmitting stations—Lafayette (Bordeaux) on 18,900m.; Nantes on 9,000m.; Rocky Point on 17,610m.; Rome on 10,860m., and Leafield on 12,350m. The curves shown are the ninth group to be published in this manner by U.R.S.I.

R113.1.—REMARQUES ET HYPOTHÈSES SUR LE "FADING."—L. Deloy. (*Onde Elec.*, December, 1925).

The author refers to the apparent freedom of long waves from fading, and discusses the effects on short wave-lengths, quoting his own experiences (in 1923) on Transatlantic communication with small power on about 100 metres. He suggests that it seems probable that fading affects all wave-lengths, but in a different manner according to their length. He refers particularly to the distortion of modulation on the short waves of KDKA, and suggests that it may be due to a fading with a period of a fraction of a second. Accordingly it is suggested that, on several thousand metres, the period of fading might be of the order of several hours; on a few hundred metres, as has been widely observed, it is of the order of a number of seconds; on a few "tens" of wave-lengths the fading would have a period of only a small fraction of a second. Such rapid fading is difficult to note, and irregularity observed may often be attributed to variations of modulation. It is suggested that a pure C.W. emission should be observed and measured (at a distance) by means of an oscillograph to detect rapid variation.

R113.1.3.—DIRECTION AND INTENSITY CHANGES OF RADIO WAVES.—Dr. C. H. Bidwell. (*J. Franklin Inst.*, January, 1926.)

An account of measurements made in May and in August, 1925, on simultaneous observations of directional and intensity variations of signals in May from KDKA and in August from WGY. Result curves for both types of variation are given. The smoothed means show definite correspondence between the fluctuations in both, in some cases directional variation crests corresponding to intensity variation crests, and in others directional crests coinciding with intensity troughs. From these facts it is concluded that both changes are due to the same cause, which is meantime a matter of speculation. Changes in the height and contour of the Heaviside layer are suggested as possible explanations.

R125.1.—A NEW DIRECTIONAL RECEIVING SYSTEM.—H. T. Friis. (*Proc. I.R.E.*, December, 1925).

A description of a unidirectional receiving system, suitable for the directional elimination of interference and atmospherics rather than for experimental direction finding. The method consists of the use of two receiving loops (as in Fig. 1) placed $\frac{1}{12}$ of a wave-length apart. The mid points of the loops are earthed to reduce antenna effect, only half of each loop being effectively used. Supersonic heterodyne reception is employed, each loop being joined to the input of a separate first rectifier valve, whose anode outputs are commoned and handed on through an intermediate frequency band-filter to the usual supersonic arrangements. The beating oscillation is applied to the signal from one of the loops by way of a crossed-coil phase-shifting transformer, so that any phase may be selected to obtain the unidirectional polar move. This curve is of the form shown in Fig. 2. A short-wave set (*i.e.*, up to 600 metres) is described and illustrated. The coils are mounted on the ends of a turntable, with the receiving gear housed at the centre. Experimental results on the reduction of interference are quoted. A long wave

Digitized by Google

(5,000-6,000 metres) set has also been used, without turntable facilities, since such a set would generally be used for the reception of signals from one direction only. Circuit diagrams for this set are

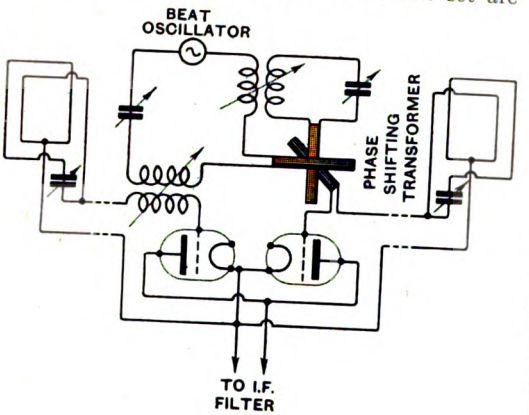

Fig. 1.

given. The adaptation of the system to the case of a single loop and a "condenser antenna" for the ordinary heart-shaped diagram is also described. The advantages claimed for the two loop system

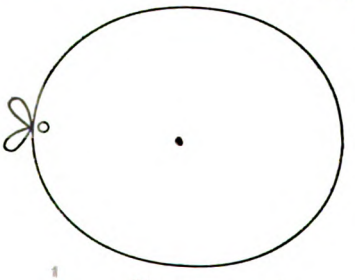

Fig. 2.

described are chiefly large reduction in atmospheric interference, with simple adjustments for the reduction of atmospheric or other interference.

R133.—Etude Analytique de l'Emission et de la Modulation par Lampes Triodes. —R. Maillet. (*Onde Elec.*, December, 1925).

A lengthy theoretical and mathematical article on the valve as a power oscillator and modulator from the large bulk of mathematics, it is not very suitable for abstract. It is pointed out that the elementary treatment of the valve oscillator is usually limited to the straight slope of the characteristic, but the present treatment is extended to deal with traverse of the representative point over the lower (zero) and higher (saturation) flats of the curve. The effects over the whole of the period covered are treated in detail. The considerations are applied to the design of an oscillator, having regard to the constants of the associated circuits, those of the valve itself, and phase angles. Tables and curves are given to facilitate calculation. Grid current is also considered, and a section deals with the use of the tables. The problem of modulation is then considered and expressions are given for various methods of modulation, *e.g.*, absorption, variation of mean grid potential, constant current, constant voltage, etc. Further tables are given for calculation. Lastly the case is considered of transmitters with independent extension, *i.e.*, master oscillator control, including the case of modulation on the voltage of the control oscillator valve.

R133.—Au Sujet du Rendement des Triodes. —Dr. B. van der Pol and K. Posthumus. (*Onde Elec.*, December, 1925).

A short contribution arising out of a previous article by the same authors (abstracted in E.W. & W.E., October, 1925). The present article considers the influence of the shape of the anode current on the output and power of a valve oscillator. Diagrams are given showing the input power and output as functions of the duration of current, and of the output as a function of the input power, in both cases for a sinusoidal and for a rectangular shape of anode current. It is shown that for a given input power the rectangular is the optimum shape.

R134.—The Rectification of Small Radio Frequency Potential Differences by means of Triode Valves.—Part III.—F. M. Colebrook. (E.W. & W.E., January, 1926).

R134.4.—An Analysis of Regenerative Amplification.—V. D. Landon and K. W. Jarvis. (*Proc. I.R.E.*, December, 1925.)

An important paper on the principles and use of reaction as an amplifying agency in a receiver. After criticising the defects of the usual methods of treatment, the authors develop an explanation on a basis of power balance. The reasoning is first applied to the case of a stage of tuned anode capacity-coupled, with reaction from the detector anode back to the tuned anode circuit, but the application of the same reasoning to the case of reaction on to the aerial is indicated in the end of the paper. The treatment consists in considering the power losses involved without reaction, and how these are modified when reaction is applied. The reasoning is well illustrated by curves. It is shown that in the absence of a signal and with reaction short of the value necessary for sustained oscillation, the sum of the losses considered is greater than the power supplied by the reaction coil. A signal voltage then prevents certain losses from occurring, thus upsetting the power balance between the power supplied by the reaction coil and the power losses of the circuit. This causes oscillation to occur, so that effectively reaction consists of self-oscillation started and controlled by the signal. The limit of amplification obtained in this way is due to variations in the anode and grid impedances, as the amplitude of the grid voltage increases. The effect of these variations in terms of power losses are shown in curves. The effect of a grid-leak and condenser are similarly dealt with in terms of power. It is concluded that they decrease the voltage amplification, but that increased detecting efficiency more than makes up for the difference when

Digitized by Google

audio frequency output from the detector is considered. Resistance *in* the grid circuit decreases the amplification by increasing the effect of the impedance variations. The effect of reaction upon distortion is considered and it is shown that a low L/C ratio may cause a loss of high notes if a weak signal is being received with full reaction. It is shown that amplification, due to the effect of reaction, still occurs even when the valve is in a condition of weak self-oscillation, this applying both to audible beating and zero beating. Zero beating is illustrated by a series of vector diagrams. Lastly the sharpening of tuning due to reaction is considered.

R200.—MEASUREMENTS AND STANDARDS.

R281.—THE DESIGN AND USE OF AN AIR CONDENSER FOR HIGH VOLTAGES.—Dr. E. H. Rayner. (*Journ. Scien. Insts.*, December, 1925 and January, 1926).

A paper dealing with the use of a loss-free air condenser for bridge measurements, more especially where an accurate knowledge of phase angle is important. It is pointed out that such a condenser can move easily be made free from stray effects than can a resistance be made free from capacity, or inductance effects. An air condenser of concentric tubular design is described and illustrated, for use in bridge measurements at 50 cycles and 10,000 to 30,000 volts. The methods of use and precautions necessary are dealt with, and results are given for two methods of measurement of very small power factor, *i.e.*, of the order of 0.009.

R281.—TENTATIVE DIRECTIONS FOR THE DETERMINATION OF THE ELECTRIC STRENGTH OF SOLID DIELECTRICS. (*J.I.E.E.*, January, 1926).

A report from the British Electrical and Allied Industries Research Association. The main text deals with the general arrangements of dielectric tests and the varied conditions to be met in practice. Appendices deal with details of different cases. A section of text and a lengthy appendix are devoted to tests at wireless frequencies. It is pointed out that dielectric loss at high frequencies causes the breakdown voltage at such frequencies to be lower than at alternating power frequencies. The heating resulting from dielectric loss is often sufficient to render the material incapable of functioning as an insulator. Loss of insulating properties at radio frequencies may therefore occur without any evidence of definite puncture. Appendix VII. deals with the Determination of the Electrical Characteristics of Insulating Materials at High Frequencies. Two H.F. tests are dealt with in detail. (1) Power Factor and Permitivity and (2) High Voltage Failures. Under (1) two valve generating sets are illustrated and described for various wave-lengths, to be used with a measuring circuit shown, in which the material under test is used as a dielectric for a condenser. Details are given of circuit constants and methods of test, with expressions for the equivalent resistance of the specimen, and for its power factor and permitivity. Test (2) deals with electrical failures and flash-over voltages at high potentials of wireless frequencies. A circuit for such tests is shown, with remarks on test conditions, and details of tests for failure *through* the material or *across* the surface of the material.

R300.—APPARATUS AND EQUIPMENT.

R342.4—A NEW REFLEX CIRCUIT.—L. W. Hatry. (*Q.S.T.*, January, 1926.)

The article first deals with the general principles of reflex circuits, including the distortion due to incorrect L.F. transformer constants, and the effect of by-pass capacities. The author then considers the exclusion of radio frequency from the reflexing L.F. transformer. The arrangement recommended is that of parallel H.F. and L.F. inputs to the first valve (as shown in Fig. 1), with

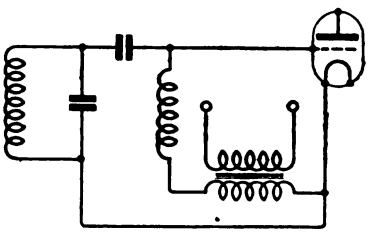

Fig. 1.

the "stopping condenser" and radio frequency choke to keep the H.F. component out of the L.F. transformer. The complete circuit of Fig. 2 is then shown, where the "stopping condenser" is shown, dotted at the filament end of the H.F. circuit. The following values are given :—

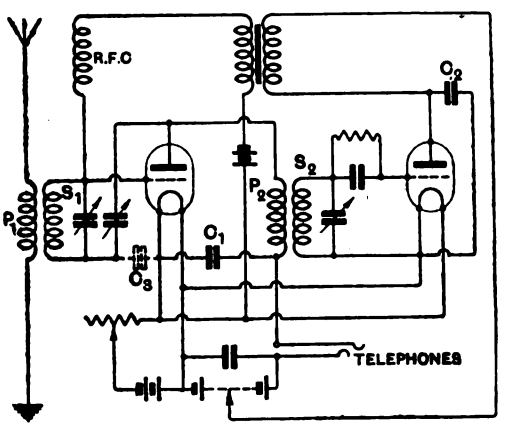

Fig. 2.

S_1 wound in two sections of 25 turns No. 22 D.C.C. on 3-inch tube.
P_1 20 turns wound on the same former as S_1.
S_2 45 turns No. 22 D.S.C. on 3-inch tube.
P_2 25 turns No. 30 D.S.C. inside S_2.
R.F.C. 500 turns on spool "lump wound" 32-36 wire.
C_1 and C_2 .001μF.
C_3 stopping condenser 50$\mu\mu$F.

A three-valve reflex on similar lines is also shown.

Digitized by Google

R342.6.—Un Amplificateur à Résonances Multiples et à Amortissement Réglable.—M. Jacquet. (*Radio Revue*, November—December, 1925.)

The article reviews some of the means of stabilising and handling several stages of H.F. amplification. As regards the difficulty of tuning several stages, the use of switching is advised, using first aperiodic stages and introducing the tuned stages one after the other. As regards the tendency to self-oscillation the use of a parallel resistance across the (tuned anode) circuit is recommended, 20,000 to 200,000 ohms being quoted as suitable values according to the circuits. The article also considers practical points of assembly and emphasises the need for the spacing of stages, short connections in each stage, separation of the input and output circuits of each stage, and arranging the coils of successive positions at right angles to each other.

R343.6.—Super-Heterodyne Radio Receivers. (*Electrical Review*, 1st January, 1926.)

An abstract of a paper read before the Junior Institution of Engineers by Mr. A. E. Bowyer-Lowe, dealing with the theory and practice of supersonic reception. After a brief review of the position as regards patent priority, the lecturer dealt with the production of the intermediate frequency and the design of a transformer to pass the necessary side bands. The use of steel cores was then discussed, but the author favoured air cored transformers at an intermediate frequency of 143 kilocycles. After dealing with the matching of the transformers the lecturer dealt with practical points of supersonic working, including an arrangement of joining the anode of the first detector valve (without H.T. voltage) to the grid circuit of the oscillator. This provides enough anode voltage for operation, and serves to couple the two valves, dispensing with a coupling coil, and being much less radiative than the usual method.

R345.—Etude de deux Systèmes de Modulation sur la Plaque.—(*Radio Revue*, November—December, 1925.)

A review of the "constant voltage" and "constant currents" methods of modulation. Both systems are illustrated and explained, and their relative advantages are discussed.

R351.—Practical Crystal Controlled Transmitters.—W. J. Lee and J. M. Clayton. (*Q.S.T.*, January, 1926.)

Descriptions of the arrangements of crystal controlled transmitters, one system (W. J. Lee) using D.C. supply, the other (J. M. Clayton) obtaining H.T. from A.C. source. The general circuits of the D.C. transmitter are shown in Fig. 1. The following constants are given with reference to the figure :—

L_1 and L_4 usual 100-turn radio frequency chokes.
L^2 "sensitising" inductance of 60 metres natural period.
L_3 20-turn 3½-inch space wound inductance.
L_5 20-turn 6-inch edgewound copper ribbon.
L_6 11-turn 3-inch No. 16 insulated wire.
R_1 5,000 ohms.
R_1 45 volts.
CO Piezo crystal.
C_1 C_3 C_4 .002 "stopping" condensers.
C_2, C_5 .0004 variable air condensers.
C_6 .00025 variable (neutralising) air condenser.
C_7, C_8 .00025 variable air condensers.

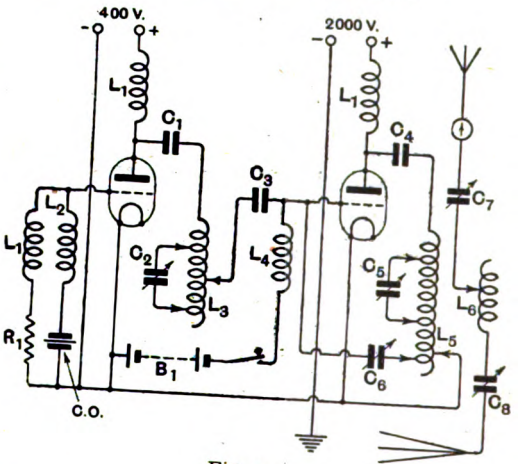

Fig. 1.

The set illustrated is for 40 metres. The "sensitising" inductance L_2 assists the crystal to oscillate and it is stated that this should have a natural wave-length about one-third higher than that of the crystal. The A.C. set uses substantially similar general arrangements, with two valves working in each position (control oscillator and power amplifier) each utilising opposite half waves of the stepped up A.C. Intermediate tappings are taken from the transformer for the smaller H.T. voltage for the oscillator. The mounting of the crystal and the assembly of the apparatus at each of the stations is illustrated.

R355.5.—The Epom Rectifier and Filter.—R. S. Kruse. (*Q.S.T.*, January, 1926.)

The rectifier described is rather similar to the Raytheon rectifier referred to in abstract in E.W. & W.E. for January, 1926. A large cathode supplies two point anodes, each dealing with

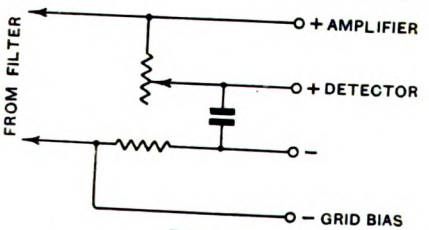

Fig. 1.

opposite half cycles to give double wave rectification. The ionised gas is Argon. Output curves are given, for output current against voltage. The usual type of filter is illustrated giving output tappings, as shown in Fig. 1, for the provisions of intermediate H.T. to the detector and for grid-bias.

Digitized by Google

R355.5—THE TONE METER.—L. F. Wolf. (*Q.S.T.*, January, 1926.)

An article dealing with the measurement of the ripple which still exists when high tension supply is obtained by rectification from an A.C. source. The arrangement suggested is to use a low reading A.C. voltmeter in series with a blocking condenser, joined across the H.T. mains. The condenser isolates the D.C., permitting A.C. voltage to be read. The calculation of the alternating component is illustrated.

R374.5.—PROPRIÉTÉS DÉTECTRICES DU BIOXYDE DE PLOMB.—J. Cayrel. (*Comptes Rendus*, 28th December, 1925.)

A piece of lead bioxide from an accumulator plate, or a film of that substance formed electrolytically on the surface of a plate of lead, platinum or carbon shows strong detection properties under certain conditions. The rectified current is in the direction bioxide to point. Points of aluminium, magnesium, calcium, zinc or tin gave best detection; points of platinum, gold, silver, nickel, copper or iron require extremely light contact. A rubbing contact also gave good results. Detection ceases when the current at the detecting electrode passes a certain limit. For feeble currents an electrode of greater surface (of the order of a centimetre square) may replace a point.

R376.—THE THEORY OF THE TELEPHONE RECEIVER.—W. H. Ingram. (*J. Franklin Inst.*, December, 1925.)

A mathematical treatment of various theories on the telephone receiver. The paper is not readily amenable to abstraction.

R381.4.—NOTES ON THE LAWS OF VARIABLE AIR CONDENSERS.—W. H. F. Griffiths. (E.W. & W.E., January, 1926.)

R382.1.—DESIGNS AND EFFICIENCIES OF LARGE AIR CORE INDUCTANCES.—W. W. Brown and J. E. Love. (*Proc. I.R.E.*, December, 1925.)

A paper dealing with large tuning inductances for transmitters. The design of outdoor coils is first considered, a porcelain spacing block for the winding is illustrated, and the use of the block to secure various windings is discussed. Various modern outdoor coils are shown in photograph, and efficiency test results quoted. The construction of coils for indoor use is then discussed and illustrated. Losses in the coils are considered and an expression is given for conductor eddy current power factor, with graphs for the calculation of the ohmic and eddy current conductor power factors of coils wound with finely stranded Litzendraht.

R382.5.—AN EFFICIENT TUNED RADIO FREQUENCY TRANSFORMER. F. H. Drake and G. H. Browning. (*Proc. I.R.E.*, December, 1925.)

The paper discusses theoretical details of H.T. transformer coupling, with tuned secondary and untuned primary. The circuit is reduced to its "equivalent" form and an expression deduced for the maximum overall amplification in terms of calculable circuit constants. Curves show this value against coefficient of coupling (between the transformer coils) for various wave-lengths in the broadcasting band, *e.g.*, 300, 400 and 500 metres. The construction of a transformer from these considerations is then discussed. It is pointed out that capacity coupling between the coils must be kept down to negligible value, while at the same time a large value of inductive coupling coefficient is desirable. The transformer evolved had a secondary of 65 turns of No. 20 D.C.C. copper wire, wound on a tube of 4 inches diameter. The primary had 20 turns of No. 28 D.C.C. wound on a cylinder fitting tightly into the secondary, with the primary at the centre of the secondary. The behaviour of the transformer in operation is then discussed, first with reference to its reactance in circuit, sharpness of resonance and the control of stability. The circuit illustrated is the conventional one, with potentiometer for control of oscillation. Experimental verification of the calculated results is then described and illustrated graphically. A summary of design formulæ concludes as follows:—

(1) To compute L_2, the inductance of the transformer secondary, let λ_0 be the minimum wave-length desired to tune. Then L_2 in *millihenries* $= 5 \times 10^{-6} \lambda_0^2$.

(2) To satisfy the relation

$$\frac{M}{\sqrt{L_1 L_2}} = \frac{Rp}{L_1\omega} \times \frac{R_2}{L_2\omega}$$

(where Rp is the anode impedance), assume $\sqrt{M/L_1L_2} = 0.5$, and substitute the value of $R_2/L_2\omega$. Knowing the anode impedance of the valve and the mean frequency to which it is desired to tune, L_1 can be computed.

(3) The secondary tuning condenser should be "low-loss" and of proper capacity to cover the wave-length band desired.

R500.—APPLICATIONS AND USES.

R514.—NEW METHOD OF DIRECTIONAL CONTROL.—P. D. Tyers. (*Electrician*, 8th January, 1926.)

An arrangement to assist a moving station (*e.g.*, ship or aeroplane) in maintaining a course on a fixed transmitter. A tuned frame aerial is joined to a high-frequency amplifier followed by a detector in whose anode circuit is joined a milliammeter. The usual scale is removed from the instrument and replaced by a rotatable disc with a zero line marked on it. The frame is to be oriented for the null position on the required transmitter, and the disc rotated to bring the zero line to the pointer. So long as this course is maintained the pointer will remain on the zero line, but will depart from it on deviation from the course when an E.M.F. will be induced in the loop, and the resultant P.D. applied to the detector grid will produce a change of anode current.

R520.—WIRELESS ON AIRCRAFT (*Electrician*, 30th October, 1925).

The article gives a general description, with three photographic illustrations, of aircraft wireless apparatus made by the Marconi Company. The

Digitized by Google

various sets are prefixed by AD followed by a number denoting the type. AD4 is an aircraft D.F. set 600 to 1 000 metres, with 8-valve amplifier. AD5 is a 100-watt telephony transmitter, with an aerial fixed to wings and fuselage. The receiver consists of tuner 70 to 140m., with a 7-valve amplifier. AD6 is an all-purpose 150-watt set, with receiver, for telephony or telegraphy. AD6A is similar but of smaller tuning range for commercial communications. AD7 is a 50-watt set, for artillery-co-operation aircraft on 200-600m., with receiver and 4-valve amplifier in a separate box. AD8 is a 500-watt set for large aircraft, giving a range to ground stations of 200-300 miles. The transmitter and receiver are separate units, the former covering 600-1 500 metres, and the latter 600-4 000 metres. Ground receiving set AD10 is for portable use with artillery, using an easily erected 50 ft. mast. AD11 and AD11A are 40 and 100-watt transmitters respectively for aircraft signalling to AD10 on the ground. A receiver of the AD6 type can be added if required. An aircraft testing set is also illustrated, enabling the wireless maintenance staff to make routine ground tests of the aircraft sets, both transmitting and receiving.

R555.—THE PACIFIC COAST STANDARD FREQUENCY STATION.—H. H. Henline (*Q.S.T.*, November, 1925.)

A description of the station at Stanford University, California, for the transmission of standard frequencies for the Pacific Coast, in conjunction with the Bureau of Standards. Two transmitters are described with photographs and circuit diagrams. One covers the range 120-1 500kC. (2 400 to 200 metres) and the other 1 500 to 6 000kC. (200 to 50 metres). The longer wave set is controlled by a master oscillator, while the short wave set is a 250-watt tube used directly with a Hartley circuit. Two aerials are used, one of 150 ft. length, 85 ft. high for frequencies of 125 to 1 000kC., the other 25 ft. long for 1 200 to 6 000kC. Two counterpoises are also in use, both together for the shorter and one only for the higher frequencies. Very complete details are given of the value of the various circuit constants.

R582.—THE VOSS PICTURE TRANSMITTER.—R. S. Kruse (*Q.S.T.*, January, 1926.)

An account of a description from *Radio-Umschau*. The transmitter employs a photo-electric cell to modulate the output of a valve working to aerial or to a line. At the receiver use is made of an X-ray tube with a control grid in the path between the cathode and anode. A short description is given of the mechanical arrangements.

R582.—PRACTICAL PICTURE TRANSMISSION.—T. P. Dewhirst (*Q.S.T.*, December, 1925.)

A description of two popular picture transmitters now available for amateur use. The cylinders for transmission and reception are motor driven, the larger set having a synchronising device. The transmitters may be applied to existing C.W. or I.C.W. wireless transmitters, circuit diagrams for their application being given. The receiving portion can similarly be used with a standard receiver output giving a strong signal. Alternative arrangements of extra amplification, if required, are illustrated. Reception of the picture can be effected by carbon paper, with ink, or with a prepared electrolytic paper.

R600.—STATIONS: DESIGN, OPERATION AND MANAGEMENT.

R611.—THE RUGBY RADIO STATION.—(*Electrician*, 11th December, 1925.)

A short general account of the new Government station. The aerial system is described with a bird's-eye sketch of the layout showing the various dimensions. The general arrangements of the radio transmitter then follows, with an explanatory skeleton diagram. This apparatus falls into the groups: Tuning fork control unit, intermediate amplifying stages, power amplifier, and intermediate and aerial circuits. The power plant is described, and the whole article is well illustrated with photographs of mast, power plant, valve units, etc.

R611.—RUGBY RADIO STATION.—A. S. Angwin and T. Walmsley (*Electrician*, 18th December, 1925.)

An abstract of a paper to be brought forward for discussion at the Institution of Civil Engineers. The paper sets forth considerations governing the selection of the Rugby site and describes the layout of the masts and buildings. Information is given on the design and construction of the masts, and of the calculations of stresses, etc., involved in the staying. The aerial and earth systems are dealt with, with a brief description of the power plant and water-cooled valves. The concluding portion of the paper describes tests upon masts, stay-sockets and insulators.

R612.—TRANSMISSION SUR ONDES COURTES.—G. Archer. (*Radio Revue*, November—December, 1925.)

An addition to previous communications on the subject of short-wave transmission. In this

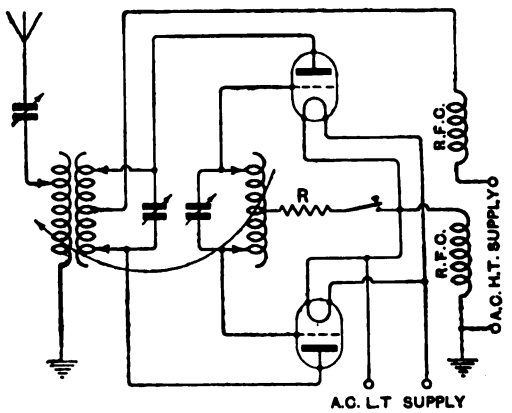

Fig. 1.

article details are given of the radio transmitter, the modulating circuits and the aerial arrangements. The transmitter circuits are as shown in

Digitized by Google

Fig. 1. L.T. and H.T. being supplied by A.C. and suitable transformers. The arrangement shown is for telegraphic transmission; if the power be too great for operation of the key at the position shown, it may be moved to between the junction of the H.T. and L.T. leads. The resistance *R* is formed by two valves, and two alternative schemes of modulation and amplification are shown for applying modulation across *R* for telephony. One arrangement uses transformer coupling and the other resistance and condenser coupling. The conclusion of the article deals with the aerial and earth or counterpoise arrangements which have been used on wave-lengths of 30 to 105 metres.

R612.—IMPERIAL WIRELESS COMMUNICATION.—(*Electrician*, 15th January, 1926; *Electrical Times*, 14th January, 1926.)

Both articles are descriptions of the beam stations nearing completion at Bodmin and Bridgwater, with notes on the masts, power arrangements, etc. The *Electrician* article is illustrated by photographs of masts and station plant.

R615.12.—POINT-TO-POINT RADIO TELEPHONE INSTALLATION IN SOUTHERN PERSIA.—F. Tomlinson (*Electrical Communication*, October, 1925).

A description of a wireless telephone system erected by the Western Electric Co. in Southern Persia. Local conditions rendering landline communication impracticable, radio telephony was finally chosen, with automatic calling and the simplest possible controls in the absence of skilled operators. Descriptions with circuit diagrams and photographs are given of the radio transmitter, the radio receiver, and the automatic signalling equipment.

The transmitter employs choke control modulation, using two oscillator valves, two modulator valves and one stage of amplification between microphone and modulator. The receiver provides for two stages of transformer coupled H.F. amplification with detector and one L.F. stage. One-way or two-way speech is provided for. In the simplex case, a push button beside the desk stand microphone operates a relay which provides the necessary aerial change over, and negatives the transmitter grids during reception. In the duplex case wave-lengths differing by 100 metres are used at transmitter and receiver, with appropriate rejector or wave-trap circuits between the receiving aerial and the amplifier.

For automatic calling the transmitter carrier-wave is modulated at 135 cycles, interrupted by a selector key to produce a pre-arranged code of impulses by means of a toothed wheel, clockwork driven. A double-throw key transfers the radio transmitter to the interrupter unit in the "Ring" position, and to the ordinary speaking circuits when thrown to "Talk." At the receiver, the 135 cycle modulation is received and amplified in the usual manner, passed through a transformer with peak at 135 cycles and finally fed through a condenser to an A.C. relay whose reed is tuned to this frequency. This relay operates a further system of relays and finally a selector unit which closes the local circuit of a bell when the correct code of impulses is received. Undesired signals and atmospherics are stated to have practically no effect, and regular commercial communication is given between two stations and also between each station and a spark station about 150 miles from each.

R800.—NON-RADIO SUBJECTS.

R616.57.—SMALL BROADCASTING APPARATUS.—(*Electrician*, 8th January, 1926.)

A short description of the Marconi 100W. type Q. broadcasting transmitter for use as a main or relay station in a small area. Four oscillating valves are used, with up to four stages of modulation amplification. The valves throughout are type L.S.5, all voltage supplies being from batteries. The microphone is of carbon type, aperiodic at all audio frequencies and free from packing. A magneto gramophone attachment can also be used.

621.382.385.—REVIEWS OF PROGRESS—TELEGRAPHY AND TELEPHONY.—W. Cruickshank (*J.I.E.E.*, January, 1926).

A general review of line communication at home and abroad, dealing more especially with new and immediately future developments. A section of considerable interest to wireless readers deals with voice-frequency telegraphs, and describes systems in use in U.S.A. and Germany, with a note on experimental trials in England. In the American system ten different frequencies—each a multiple of 85, beginning with 425 and increasing by steps of 170—are used to give ten channels of communication on one line. The frequencies are supplied by alternators, filtered before application to the line, and are filtered and amplified at the receiving end, each frequency operating its own relay. The German system uses valve generation, with four electrode valves at the receiving end. The system is advantageous for use on underground telephone networks, and the standard telephone repeaters can be employed with it. The section on telephony deals particularly with automatic telephones, both here and in U.S.A., and with the international telephone system of Europe and the improvement of underground cables.

621.314.—CONSTRUCTION DES TRANSFORMATEURS.—P. Poirette (*Radio Revue*, November—December, 1926).

A continuation of a previous article on the principles of the transformer. The article under abstract deals particularly with small power transformers (*e.g.*, of the order of 120 watts) at commercial frequencies. The requisite flux and the dimensions of the iron are discussed, and the losses due to eddy currents and hysterics are shown graphically. The windings are then considered, with expressions for the winding space, number of turns, etc., and for the total losses (copper and iron) and efficiency. The latter part gives detailed calculation of a step-down transformer (as for accumulator charging), *i.e.*, 100 volts to 12 volts 10 amperes at 50 cycles. The expressions previously derived are used for the specific case.

Digitized by Google

Some Recent Patents [R008

AERIAL SEPARATION.

(*Application date, 20th October, 1924. No. 242,759.*)

A rather interesting method of operating a receiver at some distance from an aerial is claimed in the above British Patent by W. Rawsthorne. The object of the invention is to transfer the energy from an aerial circuit to the input circuit of a receiving system over some considerable distance with a minimum loss. In order to bring about this condition it is proposed to reduce the voltage over the transmission area and increase

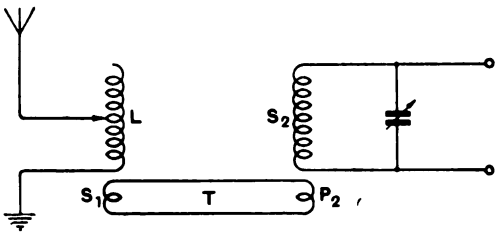

the current by means of transformers. The basic idea of the scheme is indicated diagrammatically in the accompanying illustration, in which the aerial circuit *L* comprises part of the primary winding of a step-down transformer, the secondary *S1* of which is connected to the transmission lines *T*. The other ends of the transmission lines are connected to the primary *P2* of a step-up transformer, secondary *S2* of which constitutes the input circuit of the receiving system. The specification is fairly detailed, and provides for several modifications and additions, such as the introduction of amplifiers at any point, and also the introduction of tuning arrangements at any point. The circuit shown in the accompanying diagram, of course, does not appear in the least novel, as it resembles, for example, the early Marconi multiple tuner, but the novelty of the invention lies essentially in the method of carrying it into effect, and the relative positions and values of the components indicated.

PREVENTING SELF OSCILLATION.

(*Application date, 24th May, 1924. No. 243,038.*)

A very broad claim is made in the above British Patent by J. Scott-Taggart for the use of a series of critically tuned stages in an amplifier between which are interposed damped or semi-aperiodic or totally aperiodic stages. The idea of the invention can be gathered by reference to the accompanying illustration, which shows a normal high frequency amplifier coupling two stages of radio frequency amplification, the last valve being used as an accumulative grid rectifier. The anode circuit of the valve *V1* contains an impedance *L*, while the anode circuit of the valve *V2* contains a tuned circuit *L2 C2*. The circuit *L2 C2* is tuned to the same frequency as the aerial circuit *L1 C1*. The anode circuit of the valve *V3* includes a reaction

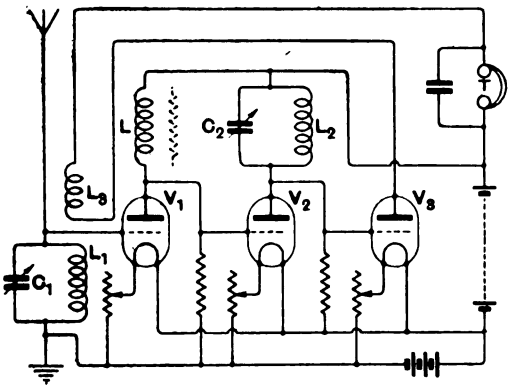

coil *L3*, and also the telephone receivers *T*. Regeneration is obtained between the inductance *L3* and the aerial inductance *L1*. If the anode circuit of *L1 C1* contained an ordinary sharply tuned circuit the valve capacities and other capacities would be sufficient to cause self oscillation. It is stated, however, that by making the damping of the anode circuit sufficiently high the tendency for oscillation can be avoided. It will further be seen that the sharpness of the tuning of the circuit *L2 C2* will not cause the valve *V2* to oscillate, or materially affect the other valves. This idea can be extended to any number of valves, arranging alternately sharply tune circuit and highly damped circuits.

A WAVE TRAP ARRANGEMENT.

(*Application date, 24th October, 1924. No. 244,227.*)

A rather peculiar wave trap arrangement is described in the above British Patent Specification by J. W. Combe. Apparently, the object of the invention is simply to tune out undesired stations, and the invention relates to an arrangement of an inductance and variable capacity combined as one unit which can be connected across the aerial and earth terminals of an ordinary receiving set. The specification states that if the receiver is tuned, for example, to London, and it is required to listen to Bournemouth, the device is connected in position, and by varying the condenser in the eliminating device Bournemouth can be tuned in without altering the tuning of the set for London. This seems, perhaps, a little peculiar. It appears that the device can be arranged simply as an ordinary series or parallel rejector or acceptor circuit. Referring to the illustration, it will be seen that the arrangement comprises a plug-in coil *L* and a variable condenser *C*. Two wander plugs *W* are

Digitized by Google

also provided, which are adapted to be connected to a number of sockets *S*. Thus it will be seen

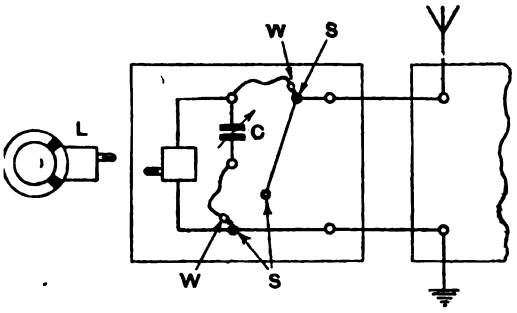

that the tuned circuit comprising *L* and *C* can be connected to the set in more than one position.

VALVE SUPPLY,

(*Convention date* (*Germany*), *7th May*, 1924. *No.* 233,718.)

This invention is described in British Patent No. 233,718 by Die Radio-Rohren-Laboratorium Dr. Gerd Nickel G.M.B.H., and assigned to the Edison Swan Electric Company, Limited. The invention simply consists in supplying both the filament and the anode of a valve from the same source of power. Thus, in the accompanying illustration, it will be seen that a source of power *P*, which is shown as a battery, is connected through two resistances *X* and *Y*, which are in series with the filament *F*. Sliding contacts *A* and *B* work over the resistances so that the amount of current flowing through the filament will be determined

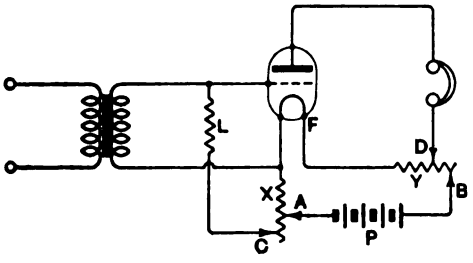

by the position of either or both of the contacts *A* and *B*. Additional contacts *C* and *D* are also provided, which work respectively over the resistances *X* and *Y*. Thus it will be seen that the potential of the anode will be determined by the position of the sliders *D* and *A*. Similarly, the grid potential is determined by the position of the sliders *C* and *A*. It is interesting to note that a grid-leak *L* is used to determine the grid potential, although the lower end of the transformer or other device to which the valve is connected is joined to the point *N*, that is, one side of the filament.

A QUENCHED RECEIVING SYSTEM,

(*Application date*, *14th November*, 1924. *No.* 244,568.)

A form of super-regenerative receiver is described in the above British Patent Specification by C. Seymour, G. A. Irving, M.Sc., and J. C. W. Drabble. The accompanying illustration should make the circuit quite clear. It will be seen that the aerial circuit *AE* is shown coupled to the divided input circuit of a valve V_1. The input circuit of the valve comprises two inductances L_1 and L_2, tuned by a variable condenser C_2, a stopping condenser C_1 existing between them. The grid circuit contains a grid condenser and leak *GL*. The anode supply to the valve V_1 is through an inductance *H*, and telephone receivers *P*, shunted by a condenser C_6. Another valve V_2 is also shown, and is used for generating oscillations by virtue of the coupling between the anode

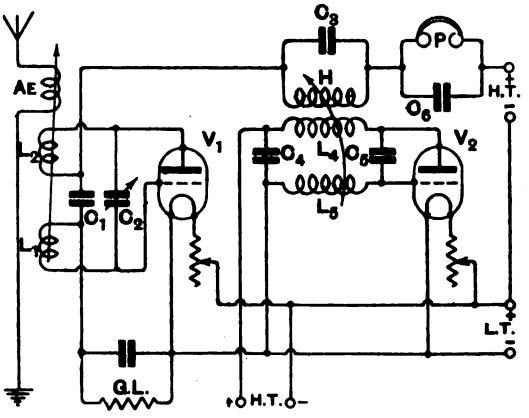

circuit and the grid circuit, comprising inductances L_4, L_5, and condensers C_4, C_5. The tuned circuit C_3H is tuned to the same frequency as that of the oscillations generated by the valve V_2, which comprises the source of quenching oscillations. Normally the valve V_1 is so adjusted with regard to grid potential and steady anode voltage from the normal anode supply that it will not quite oscillate. Thus it will be seen that by coupling the tuned circuit C_3H to the source of quenching oscillations sufficient voltage will be induced into that circuit and applied to the anode to cause the valve to oscillate for a certain period of one half-cycle of the quenching frequency. In this way a form of super-regenerative circuit is obtained which is exceedingly simple to handle, and in which the adjustments are far from critical. It is stated in the Specification that the anode circuit of the first valve can comprise a frame instead of a coupled aerial arrangement as shown.

CONTROLLING REGENERATION.

(*Application date*, *11th September*, 1924. *No.* 244,160.)

A method of controlling regeneration, lying essentially in the respective dispositions of a number of tuning coils is described in the above British

Digitized by Google

Patent, which is granted to N. P. H. Hinton, and Metropolitan-Vickers Electrical Company Limited. The invention will, perhaps, be better understood by reference to the accompanying illustration, which shows a two-valve receiver employing this method of regenerative control. It will be seen that the aerial circuit comprises a series condenser C_1 and an inductance L_1, which is connected between the grid and filament of the first valve through the medium of a small condenser C_2, a grid-leak R_1 being used to provide suitable grid bias. The anode circuit contains an inductance L_2, which is coupled to another inductance L_3, tuned by a variable condenser C_3, which comprises a tuned circuit tuned to the same frequency as the incoming signals. This tuned circuit L_3C_3 is connected between the grid and filament of the second valve V_2, which is provided with a grid condenser and leak, so that it acts as a rectifier. It will be noticed that the circuit is a dual or reflex arrangement, in which the first valve acts as a high or low frequency amplifier, and the second valve as a detector. The low frequency potentials produced in the anode circuit of the valve V_2 are transferred to the grid circuit of the second valve, by means of a resistance R_2, which is connected through a coupling condenser C_4 and a choke H. The anode circuit of the valve V_2 also contains a reaction coil L_4. The inductance L_2 and the inductance L_3 comprise a high-frequency transformer, and are arranged co-axially, one above the other. the distance between them preferably being fixed. The aerial inductance L_1 is placed some distance from the inductance L_2 and L_3, but on the same plane. The reaction coil L_4 is arranged so that it can be moved in a plane parallel with that in which the inductances L_1 and L_3 lie. The coils are so arranged in direction that by coupling the coil L_4 to the coil L_3 a regenerative effect is produced in that circuit, while movement in the opposite direction tends to oppose it. When the reaction coil L_4 is displaced from its mid position between the inductances L_1 and L_3, and moved towards the inductance L_1, reaction is introduced around both valves causing regeneration in their respective circuits.

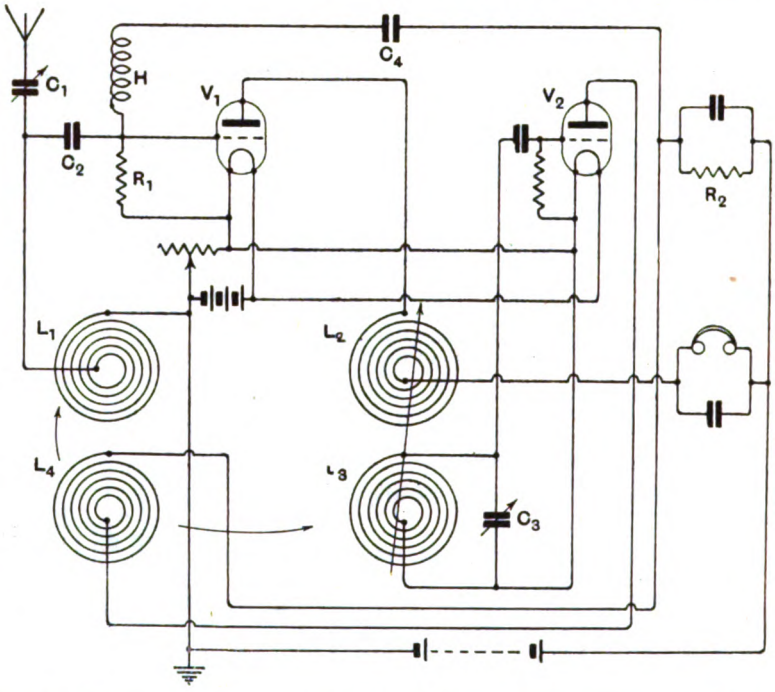

A DIFFERENTIALLY-OPERATED CONDENSER.

(*Application date, 3rd July, 1925. No. 244,009.*)

A differentially-controlled condenser is described by B. Hesketh in the above British Patent. The condenser will be recognised as that which is incorporated in the McMichael supersonic unit. Referring to the accompanying illustration it will be seen that the condenser comprises two insulating blocks B of ebonite or similar material, to the inner faces of which are secured metal conducting plates P, forming the elements of the condenser.

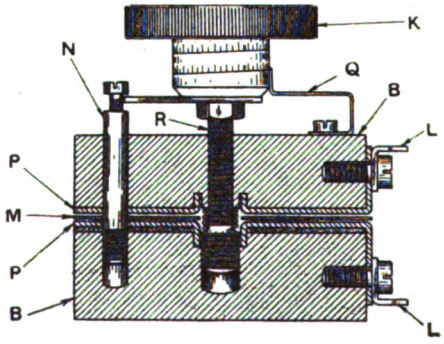

Between these is interposed a sheet of dielectric M of mica or similar material. The ends of the two plates are brought out and fixed to terminals provided with soldering lugs L. The two blocks are provided with threads of different pitch, a central rod R also provided with two differently pitched threads being placed between the two blocks. A locating pin N is screwed into the lower block, and is an easy fit in the hole H, through the upper block. The end of the rod R is provided with

Digitized by Google

the usual knob K and suitable pointer. It will be seen that on rotating the knob K the rod will tend to rotate at different speeds in the two insulating blocks B, but since this cannot occur a differential action will be obtained, whereby the upper block will move towards the lower block. Thus it will be seen that the two elements constituting the condenser will be brought nearer together, thereby causing a variation in the capacity. The illustration shows that a form of micrometer head can be fixed to the knob K working against a pointer Q.

A DOUBLE CONE DIAPHRAGM.

(*Convention date* (*France*), *22nd September*, 1923. *No.* 239,245.)

P. G. H. d'Amour describes in the above British Patent Specification the construction of a double cone diaphragm. The accompanying illustration shows that the reproducing device, or diaphragm,

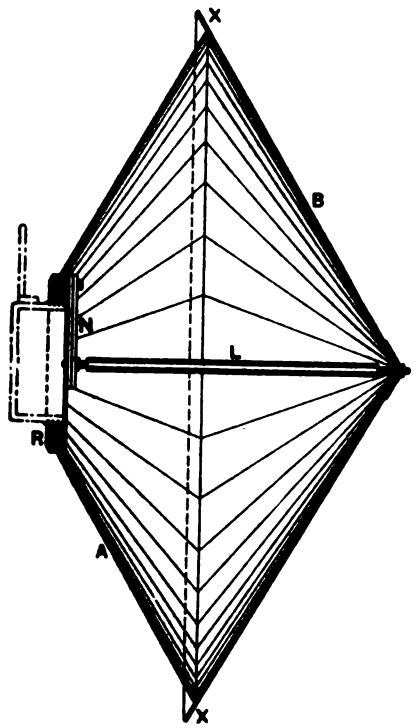

comprises two cones A and B, fixed together at their bases at X. The cone A is truncated and fixed to a ring R. The apex of the cone B is provided with a link L, the other end of which terminates in the region of the ring R, where it is connected to some actuating mechanism. This may either be an electro-magnetic device such as the diaphragm of an ordinary telephone receiver, or the link may be connected directly to a balanced armature. The specification also provides for operating the link purely mechanically. The specification is fairly detailed, and contains many modifications, not only of the cones themselves, but of the actuating mechanism. In the particular illustration shown the end of the link L is attached to two strips of preferably different material, as at N. Modifications of the cones include inverting the cone B so that it lies within the cone A, or truncating the cone B and refixing the truncated portion so that the apex points towards the apex of the cone A.

UTILISING THE MAGNETIC COMPONENT.

(*Convention date* (*France*), *6th June*, 1923. *No.* 217,245.)

A system of wave propagation and reception utilising the magnetic component of electro-magnetic waves described in the above British Patent by L. Levy. The accompanying diagram illustrates the broad idea of the system of transmission and reception. The aerial or radiator comprises a long body, of magnetic substance, preferably in the form of a cylinder C. Located about the middle of the magnetic body C is a winding W which is the seat of high-frequency currents, derived from a generator G. The aerial is composed of a number of strips, which are long in comparison with their width, and are arranged in a bundle, as indicated. The variation in longitudinal magnetic field at various points along the aerial is indicated on the left of the diagram. The actual propagation of waves takes place from W towards the two ends, and gives rise to stationary wave pehnomena by ordinary reflection at the ends, the antinode of the longitudinal magnetic field corresponding, of course, to the node of the transverse magnetic field. Movable short-circuited turns T are so arranged that they can be moved along the aerial so as to alter the position of the node, and hence alter the frequency at which the aerial oscillates.

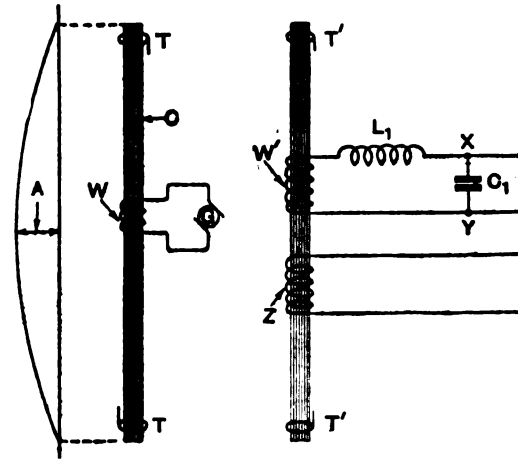

A suitable reception aerial and its associated circuits is shown on the right of the illustration. Similar short-circuited turns T_1 are shown for the purpose of tuning, and a similar winding W_1 is

Digitized by Google

arranged about the mid-point of the aerial, and energises the tuned circuit L_1C_1. It is stated that amplified potentials are set up across the points XY. The specification states that magnetic losses may be compensated by including a winding Z around the aerial, which may be energised from circuits which are the seat of amplified currents.

AN AUTOMATIC CALLING DEVICE.

(*Application date*, 31*st July*, 1924. *No.* 245,176.)

An automatic calling system is described by G. C. Beddington in British Patent No. 245,176. The method of calling exists in transmitting either simultaneously or consecutively signals of an appreciable length at predetermined frequencies. The receiving device is only rendered operative when both the signals are received simultaneously, or consecutively, as the case may be. The broad idea of the invention can be gathered by reference to the accompanying illustration. It will be seen that two tuned circuits L and L_1, presumably tuned by their self-capacity, are associated with suitable aerials for receiving the desired signals, or alternatively, the inductances L and L_1 may be suitable for passing on the effect of rectified or amplified high-frequency currents obtained from the aerial systems. It will be noticed that the inductances are connected between the filament and the grids of a double grid valve V. The anode circuit of the valve V contains a resistance R and a battery B_1, the negative side of which is connected to the grid of a three-electrode valve V_1, the anode circuit of which contains a relay K and the usual high tension battery. A small condenser C is also connected between the grid and filament of the three electrode valve. It will be further noticed that the grids of the double grid valve are negatively biased by means of the batteries B_2 and B_3, the bias being so arranged that the operation of the characteristic is substantially in the region of the origin. This means that substantially no current can flow in the anode circuit of the valve V. When signals are received by the coils L and L_1 the negative half cycles have no effect, but the valve will become partially conducting during the presence of positive half cycles. This means that the battery B_1 will cause the negative potentials to be transferred to the grid of the valve V_1, where it will accumulate, until the anode current of that valve has been reduced sufficiently to render the relay or calling device K operative. The presence of the condenser C, of course, tends to accumulate the charge and assist in the operation of the device. Another modification of the idea is shown in the lower half of the illustration. This scheme, of course, is intended to be used for a calling system in which the signals are sent consecutively. Here the coil L with its negative bias is connected to an ordinary three-electrode valve V, which in turn is connected through some form of resistance and battery to the grid of another three-electrode valve V_1. This in turn is connected to one of the grids of a double grid valve V_2. The other coil L_1 is connected between the filament and the other grid of the double grid valve. The anode circuit of the double grid valve is connected by a similar battery and resistance to the grid circuit of the lasr valve V_3, which again contains the calling device K. The method of operation should be obvious in the light of that described in connection with the first arrangement.

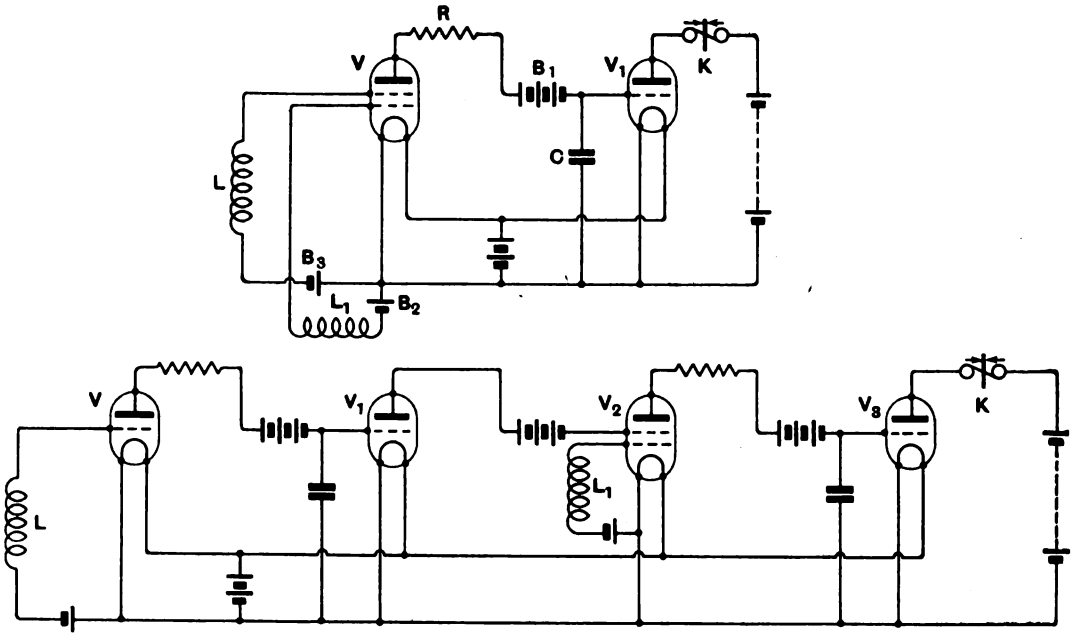

Digitized by Google

EXPERIMENTAL WIRELESS & The WIRELESS ENGINEER

VOL. III. APRIL, 1926. No. 31.

Editorial.

A Further Question of Nomenclature. The Polarisation of Electromagnetic Waves.

WHEN ordinary light passes through a slice of tourmaline cut in a plane parallel to the crystal axis, it is polarised, *i.e.*, the vibrations constituting the emerging light are all in the same direction, so that if another similar slice of the crystal is put in the path of the beam and turned so that the crystal axis is at right angles to the crystal axis in the first slice, no light can pass. This fact was known long before the electromagnetic nature of light was established, and the light after passing through the slice of tourmaline was simply said to be polarised. Light can be polarised in other ways than by passing it through tourmaline. To indicate the direction of the polarisation, the light was always said to be polarised in the plane at right angles to the axis of the tourmaline, but opinions differed as to whether the ether vibrations which constituted the light took place in this plane or at right angles to it.

MacCullagh maintained the former and Fresnel the latter view; thus, according to MacCullagh, the vibrations were as shown by the horizontal arrows marked *M*, whereas according to Fresnel, they were represented by the vertical arrows marked *E*. When Clerk Maxwell propounded the electromagnetic theory of light it was seen that both schools had been right, since the beam of polarised light is merely an electromagnetic wave with the magnetic and electric fields at right angles. It was found that MacCullagh's vibrations in the so-called plane of polarisation were the magnetic vibrations, whilst those of Fresnel, normal to the plane, were the electric vibrations.

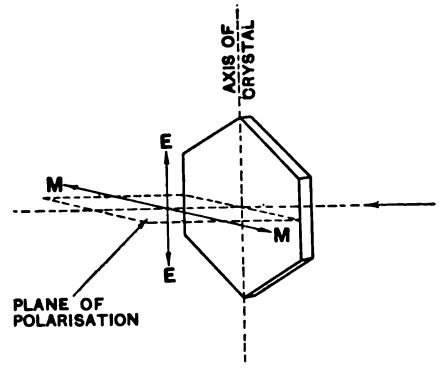

This convention as to the plane of polarisation is still maintained in optics and in the *Wireless World* of 17th March, p. 430, Mr. Williams, of King's College, takes Dr. Smith-Rose to task for using the opposite convention in speaking of wireless waves, to which the latter pleads guilty, but excuses himself on the ground that it is common practice among radio engineers to speak of the wave being polarised in the plane containing the electric vector. Wireless engineers refer to the radiation from a vertical aerial as being vertically polarised, whereas

Digitized by Google

according to the classical optical convention it is polarised, at least, near the ground, in a horizontal plane. Dr. Smith-Rose suggests that the wireless practice is preferable to the older convention and suggests its adoption. The term polarisation as applied to light presupposes a vibration, and was originally used with reference to a supposed vibration of the ether; the choice of the conventional plane of polarisation was made in ignorance of the nature of the vibration and was not due to any preference for the magnetic as opposed to the electric oscillation, and one may perhaps claim that in the light of modern knowledge, the definition should come up for revision. In a view, however, of the old established usage in optics, a more practical suggestion is that radio engineers should always make their meaning quite clear, by introducing the word electric or magnetic. The radiation from a vertical aerial can hardly be said to have a vertically polarised electric field, since the electric field is only vertical near the earth's surface; nor can one speak of a vertical plane of polarisation since there are an infinite number all passing through the aerial. Near the ground one can say that the magnetic field is horizontally polarised, and can speak of a horizontal plane of polarisation, but at a height this is not so, since, although the magnetic field is horizontal, the direction of propagation is not horizontal, but along an inverted cone with the aerial at the apex.

Dr. Smith-Rose suggests that the classical usage should be modified and the plane of polarisation be referred to the electric vector because the electric force is more fundamental than the magnetic force, the latter being merely the result of the movement of the former. If one goes back as far as possible into the nature of things, there is the electron with its electric field, but no magnetic field unless the electron moves. Dr. Smith-Rose takes as his example, however, the case of an observer who, instead of remaining stationary, moves with the wave at the same velocity. To such an observer the magnetic force of the wave will not be perceptible; at least, so Dr. Smith-Rose assures us. If any reader finds the velocity of light rapid travelling for clear thinking, he may consider a bird flying across the ocean in the same direction and at the same speed as the waves. To a stationary observer the waves are due to a combination of displacement and velocity, the energy being partly potential due to the former, and partly kinetic due to the latter, just as the energy of the electromagnetic waves is partly electric and partly magnetic, but to the bird the waves are at rest and the whole ocean is covered with stationary corrugations representing a distribution of potential, but no kinetic energy. We must confess, however, that we do not like this argument; we feel somewhat sceptical about the evidence of an observer who admits that he was travelling with the velocity of light when he made the observations. If he knew anything about Maxwell's laws he would wonder how the unchanging electric field distribution about him was maintained, and why the line integral of electric force around a closed circuit was not zero, just as the bird might be troubled to account for the persistence of the stationary corrugations on the ocean. Far from concluding that there was no magnetic field, he might be led to the assumption of a steadily changing magnetic field as the only means of accounting for the electric field distribution round about him. If, however, he had heard of Lorentz and Einstein, he might have some very justifiable doubts about the applicability of Maxwell's laws to an observer travelling at the speed of light. Similarly, a closer examination of the state of the medium constituting the apparently stationary corrugations might cause the intelligent bird to have some doubts as to the absence of kinetic energy.

Although we are not impressed by the example chosen by Dr. Smith-Rose, we none the less agree that the electric field appears to be more fundamental than the magnetic field and that, if the discoverers of polarisation had known the nature of the beam of light, they might probably have chosen the plane of polarisation to coincide with the electric vector. As it is, however, we fear that the long established convention must remain and radio engineers must use a few more words to specify exactly what they mean when applying the term polarisation to electromagnetic waves.

Digitized by Google

Effective Resistance of Inductance Coils at Radio Frequency.—Part I.

By S. Butterworth. **[R144**

(*Admiralty Research Laboratory, Teddington.*)

1. Introduction.

OUR main object in the following work is to develop formulæ suitable for the determination of the effective resistance of inductance coils at radio frequencies, and from these formulæ to obtain a scheme of design which aims at making the resistance as small as possible.

That there is need for such a scheme of design is clearly shown by quoting the constants of two coils, both constructed at the National Physical Laboratory, and both intended for use at a frequency of one million cycles per second. The first coil is one used in the Standard Harmonic Wavemeter[1] at the National Physical Laboratory, and is in the form of a flat spiral nearly 20 cms. in diameter, wound with copper strip. Its inductance is 45 microhenries and its resistance at a wavelength of 300 metres is 0.89 ohm, that is, 19.8 ohms per millihenry.

The second coil is that described by Mr. Wilmotte in the May number of *E.W. & W.E.* It is a square coil of side 7.5 cms. and winding length 4.5 cms. The wire used is No. 22 S.W.G. Its calculated inductance is 77 microhenries and its resistance at 300 metres is 1.58 ohms; that is, 20.5 ohms per millihenry. The point we wish to emphasise in regard to these two coils is that, although the former coil is much larger than the latter, and was decided upon after considerable experimental work, yet its efficiency as expressed in ohms per millihenry is practically the same as the much more modest coil of Mr. Wilmotte, which may be wound by any beginner at the cost of a few pence.

As regards the factors contributing to the high-frequency resistance of inductance coils, great stress has been laid recently upon the importance of dielectric losses. Now, although these losses may play a very important part in very large transmitting coils, or even in receiving coils when used at very short wave-lengths, it is easily possible, by taking very ordinary precautions, to reduce these losses to a small fraction of the whole in receiving coils intended for the broadcasting range of wavelengths. The present writer has wound coils with D.C.C. wire upon solid wooden formers, and on comparing the calculated copper resistance with the total measured resistance has found the ratio of copper to total loss to lie between 60 and 70 per cent. at a wavelength of 300 metres, while with coils for which the insulating material is carefully chosen the copper loss has been 80 to 90 per cent. of the whole. Clearly, therefore, any numerical scheme of design must aim at making the *copper* losses a minimum.

It will be shown that the copper losses in inductance coils in which the turns are well spaced divide themselves into two independent portions, one of which diminishes and the other increases as the diameter of the wire is increased. There is therefore a certain diameter of wire for which the two losses "balance"; that is, the rate of diminution with increase of diameter of the one loss is equal to the rate of increase of the other loss; so that at this diameter the losses are at a minimum.

The scheme of design, therefore, is to find for all reasonable shapes of coil the value of this best wire diameter and the corresponding loss. By comparing the minimum losses for each shape of coil we can then arrive at the best shape of coil to suit any prescribed conditions. Since the inductance required fixes the number of turns, it only remains to fix the mode of grouping of the turns in the winding section and the order in which the current shall pass through the turns.

The mode of grouping will only affect the copper losses slightly, and (except in so far as self-capacity modifies the effective resistance) the order of passage of the current through the turns has no influence upon the copper losses, so that these latter points

[1] See the paper entitled "A Self-contained Standard Harmonic Wavemeter." Dye. *Phil. Trans., A*, Vol. 224, p. 259.

Digitized by Google

are determined by the mechanical means of winding and by the desirability of having low self-capacity. The correct mode of procedure will be illustrated by examples to be given later.

2. Copper Losses in Inductance Coils.—Preliminary Survey.

In Fig. 1 is drawn the section of a circular inductance coil of rectangular winding section, the turns being represented by small circles, each occupying its own small rectangular space. When current flows in the coil, a magnetic field is set up, the lines of force of which are approximately represented by the broken lines in the figure.

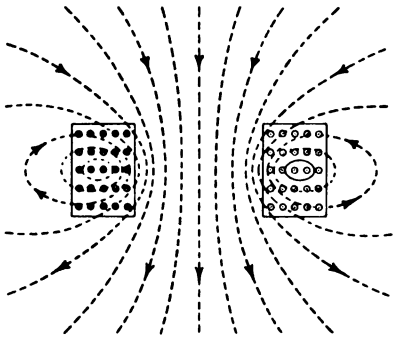

Fig. 1. *Cross section of circular inductance coil of rectangular winding section. The small circles represent the wires composing the turns of the coil and the broken lines are the magnetic lines of force produced by the current in the coil.*

When the current is alternating there are two distinct copper losses in the coil. The first loss occurs whether the current is alternating or not and, for well-spaced turns, is independent of the coiling. It is, in fact, merely the loss due to forcing the current against the resistance of the wire. This loss, however, depends upon the frequency of alternation of the current, increasing as the frequency increases. Since this loss is the same as when the wire is straight we may refer to it as the straight-wire loss, and denote the resistance representing it by R_s. For direct currents R_s, of course, reduces to the ordinary resistance R.

The second loss is due to the alternations of the general magnetic field of the coil. It is a fundamental principle of electro-magnetic induction that when the lines of force of a varying magnetic field thread through any conducting mass there is induced in that mass a circulating or eddy current. This eddy current requires energy for its maintenance, which must be supplied to the mass from the current producing the varying field, and thus the effective resistance of the coil carrying this current is increased. Applying this to the case of the inductance coil shown in Fig. 1, the variation of the general magnetic field of the coil induces eddy currents in each wire, and the energy required increases the effective resistance. Since the added resistance is due to the magnetic field of the coil we will denote it by R_h. We may look upon this resistance as being due to the presence of neighbouring wires, and from this point of view the added resistance is sometimes referred to as the "proximity" resistance.

It will readily be seen that the induced eddy currents do not alter the total current flowing over the whole cross-section of the wire, as they both go and return in the same section. They act rather in *distorting* the distribution of current throughout the section. It is well to consider this distortion more closely, as it will help us when we are dealing with the resistances in a quantitative manner.

The general principle governing the direction of induced currents is the well-known Law of Lenz, namely, that the induced effect always opposes the inducing cause. Since in the present case the inducing cause is the alternation of the magnetic field, the induced current will oppose the action most effectively if, by its own field, it annuls the magnetic field threading through the substance of the wire. The direction of the eddy current must therefore be such that the magnetic field it sets up opposes the inducing magnetic field inside the wire.

Thus, let the circle in Fig. 2 represent one of the right-hand upper wires of the coil of Fig. 1. At the moment when the current is flowing upwards from the paper the field within the wire and due to the current in the wire forms a series of circular counter-clockwise lines of force concentric with the circumference of the wire, while the general field due to the current in the remainder of the coil may be regarded as uniform over the section of the wire and directed up the page.

First, if the general field is absent, a radial

Digitized by Google

wedge, such as AO, imagined cut in the wire, will have acting upon it a downward field. Therefore the eddy current in this wedge must produce an opposing upward field. To do this it must flow towards the observer at A and away from the observer at O. A similar eddy current is induced in every wedge such as AO, and it is immediately seen that the eddy current tends to weaken the main current in the central regions and to strengthen it in the outer regions of the wire. Thus the current tends to concentrate on the outer skin of the conductor, and as the virtual section of current flow is thus diminished the resistance of the wire is increased.

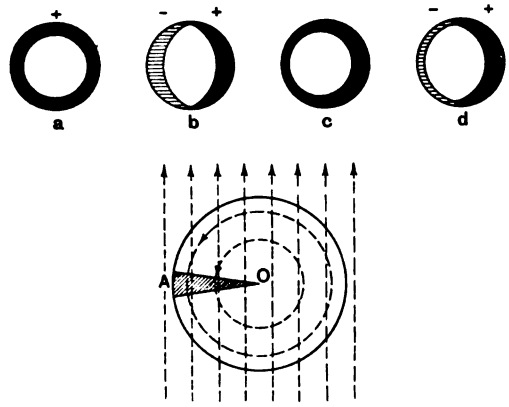

Fig. 2. *The full circle in the main figure represents a wire in the top right-hand half of the coil of Fig.* 1. *The broken circles in the main figure are the lines of force due to the current in this wire and the broken vertical lines are the lines of force due to the remaining wires.* AO *is a wedge imagined cut in the wire. The eddy currents induced in this wedge are considered in the text:* (a) *shows the current distribution in a solitary wire,* (b) *the current induced by a uniform field, and* (c) *and* (d) *the distorted distribution due to* (a) *and* (b) *combined,* (c) *holding when* (a) *predominates and* (d) *when* (b) *predominates.*

Next, if we suppose for the moment that the current in the wire is absent, the general field must produce an eddy current which by the Law of Lenz flows into the paper in the left half and out in the right half of the section of the wire. There are in this case two crescent-shaped sections of current, the left one negative and the right one positive. Superposing the main current, the distortion is seen to consist of a motion of the mean centre of the current in the wire towards the right and a general concentration of the current towards the surface. If the same reasoning be applied to every turn in the coil it is found that the current is, so to speak, trying to get to the nearest boundary of the winding section of the coil, the effort being more vigorous in the case of the inner turns because of the stronger general field there. The phenomenon is, in fact, an attempt to reproduce the "skin" effect for the whole winding section which has been seen to occur in the case of the individual wire.

We may also readily deduce that the two types of energy loss act independently, for while the main current, even when modified by the eddy currents due to the circular field has the same sign in both left and right halves of the wire section, the eddy current induced by the general field is of changed sign in the two halves. Thus if I_m and I_h be the two types of current in a filament of the wire in the right-hand half, the total current in this filament is $I_m + I_h$, while in a symmetrically disposed filament in the left half the total current is $I_m - I_h$. Now the energy loss is proportional to the square of the current, so that for the pair of filaments the energy loss is proportional to $(I_m + I_h)^2 + (I_m - I_h)^2$, that is to $I_m^2 + I_h^2$. Adding, for all filaments, the total energy loss is proportional to $\Sigma I_m^2 + \Sigma I_h^2$.

But this is the result we should have obtained if we had calculated each loss as if the other were absent and *then* added.

As the latter method will enormously simplify our problem it will be the one adopted in the following pages.

The problem of determining the copper resistance in inductance coils is thus capable of analysis into three portions, viz. :—

(*a*) The variation of resistance of a solitary wire with frequency.

(*b*) The energy losses in a wire when placed in an alternating magnetic field.

(*c*) The distribution of magnetic field throughout the winding section of various types of inductance coils.

These problems will be dealt with in turn in the following sections.

3. The Alternating Current Resistance of a Long Straight Wire.

Formulæ for the computation of the alternating current resistance of a long straight wire were supplied nearly forty

Digitized by Google

years ago by Kelvin,[2] Rayleigh[3] and Heaviside.[4] The formulæ as given by them were not in such a form as to be easily used by the electrical engineer, so that, as the use of high frequency currents increased, various writers tried to simplify the mode of presentation. Tables of values of the alternating current resistance of wires of various diameters have been computed by Zenneck[5]; and Rosa and Grover[6] have given tables whereby the A.C. resistance may be found with great ease. The column headed $1+F$ in Table I. has been extracted from the latter set of Tables. Before giving the general solution we will consider the cases of low and high frequencies respectively.

3.1. *Case of Low Frequency.*

We have seen in Section 2 that the effect of the circular alternating field within the substance of a straight wire carrying alternating current is to produce an eddy current which flows in the same direction as the main current in the outer regions of the wire and returns *via* the central regions. The total energy loss in the wire is obtained by adding the energy loss due to this eddy current to the energy loss due to the main current. If the maximum value of the main current be I and the D.C. resistance be R the dissipation of power by the main current is

$$W_1 = \tfrac{1}{2} RI^2 \quad .. \quad .. \quad (1)$$

Now, as regards the eddy current, if E be the average value throughout the wire of the E.M.F. inducing this current and R' be the average value of the resistance of the eddy current path, the dissipation of power by the eddy current is

$$W_2 = \tfrac{1}{2} E^2/R' \quad .. \quad .. \quad (2)$$

as at low frequencies the inductance of the eddy current path may be neglected.

To estimate the value of E, let a be the radius of the wire and let the frequency be $\omega/2\pi$. The field intensity throughout the wedge AO varies uniformly from zero to $2I/a$ as we pass from O to A so that if the wire is of length l the total flux threading through the wedge is $la \times I/a = lI$, and the E.M.F. that acts on the filament of current path which bounds the wedge is ωlI. The mean E.M.F. must be less than this, so that as we are only seeking an approximate solution we will assume that the average E.M.F. is $\tfrac{1}{2}\omega lI$.

The resistance R' of the eddy current path may also be approximated to by imagining the wire to be divided into a central rod and outer tube each of the same resistance, viz., $2R$. If we suppose the eddy current to flow by the outer tube and return by the central rod the resistance R' is clearly $4R$ and then by (2) $W_2 = \omega^2 l^2 I^2/32R$.

It would be surprising if this were the correct result, as we have made two approximations. The equation is, however, correct in form and in actual fact will be correct in magnitude if we replace the number 32 by 24. Hence we write[7]

$$W_2 = \omega^2 l^2 I^2/24R \quad .. \quad (3)$$

Adding W_2 to W_1 the power loss is

$$W_s = W_1 + W_2 = \tfrac{1}{2} RI^2 \left(1 + \frac{\omega^2 l^2}{12R^2}\right) .. \quad (4)$$

and therefore the A.C. resistance is

$$R_s = R\left(1 + \frac{\omega^2 l^2}{12R^2}\right) = R(1+F) \text{ say} \quad .. \quad (5)$$

3.2. Formula (4) will not carry us far up the scale of frequency, as when the term F is beginning to be appreciable the assumptions made in establishing (5) are no longer valid. The formula is, however, useful as it indicates the *form* which the final solution will take.

In regard to the correction F it is important to notice that it is a *pure number*,[8] as it has to be added to the pure number unity. It should also be noted that R in the expression for F must be in c.g.s. units. Since on this system of units an inductance is measured in centimetres, we may for the moment regard the length l as representing some inductance and then we see that F is of the nature of the square of the ratio of a reactance to a resistance, thus verifying its nature as a pure number.

Although the length of the wire appears

[2] *Math. and Phys. Papers*, Vol. 3, 1889.
[3] *Phil. Mag.*, Vol. 21, 1886.
[4] *Electrical Papers*, Vol. 2, p. 64.
[5] Zenneck, *Wireless Telegraphy*, Table 7; Hoyle, *Standard Tables and Equations in Radio Telegraphy*, Table 18, p. 51.
[6] *Bulletin Bureau of Standards*, p. 226, 1912.

[7] All units are assumed to be electro-magnetic c.g.s. units and all alternating quantities are supposed represented by their maximum values.

[8] *I.e.*, *not* a length, a resistance, or any magnitude of that kind.—ED.

Digitized by Google

in the expression for F, yet F is independent of this length, as R is also proportional to the length of the wire.

On expressing R in terms of the resistivity ρ and diameter d of the wire we get

$$F = \frac{\pi^2\omega^2 d^4}{192\rho^2} = \frac{z^4}{192} \text{ say} \quad .. \quad (6)$$

in which, for brevity, we have written

$$d\sqrt{\frac{\pi\omega}{\rho}} = \pi d\sqrt{\frac{2f}{\rho}} = z \quad .. \quad (7)$$

This form is chosen because when the simple form (6) no longer holds for F, F may still be expressed in simple series involving z and z only. To see that this is so we need only know that F always remains a pure number which depends only on d, f and ρ. Now, the only way in which we can associate d, f and ρ so as to yield a pure number is to combine expressions such as $A(d\sqrt{f/\rho})^n$ where A and n are mere numbers. As z is equal to $\pi d\sqrt{2f/\rho}$, we may therefore assert that F is a function of z and of z only.

This law is very important, as by its means we can, from measured values of the A.C. resistance of a particular wire at a series of frequencies, deduce the values of the A.C. resistances of wires of other diameters and of other materials. This is effected by plotting the ratio of A.C. resistance to D.C. resistance of the particular wire against the single variable z.

TABLE I.

Values of the Functions F and G.

d = diameter of wire (cm.); ρ = resistivity (c.g.s. units); f = frequency (cycles per sec.).
$z = \pi d\sqrt{2f/\rho}$. For copper of resistivity 1,700 c.g.s. units $d\sqrt{f} = 9.28\ z$, or $z = 0.1078\ d\sqrt{f}$.

z	$1+F$	G	z	$1+F$	G	z	$1+F$	G	z	$1+F$	G
0.0	1.000		2.5	1.175	0.2949	5.0	2.043	0.755	10.0	3.799	1.641
0.1	1.000		2.6	1.201	0.3184	5.2	2.114	0.790	11.0	4.151	1.818
0.2	1.000		2.7	1.228	0.3412	5.4	2.184	0.826	12.0	4.504	1.995
0.3	1.000	$z^4/64$	2.8	1.256	0.3632	5.6	2.254	0.861	13.0	4.856	2.171
0.4	1.000		2.9	1.286	0.3844	5.8	2.324	0.896	14.0	5.209	2.348
0.5	1.000	0.00097	3.0	1.318	0.4049	6.0	2.394	0.932	15.0	5.562	2.525
0.6	1.001	0.00202	3.1	1.351	0.4247	6.2	2.463	0.967	16.0	5.915	2.702
0.7	1.001	0.00373	3.2	1.385	0.4439	6.4	2.533	1.003	17.0	6.268	2.879
0.8	1.002	0.00632	3.3	1.420	0.4626	6.6	2.603	1.038	18.0	6.621	3.056
0.9	1.003	0.01006	3.4	1.456	0.4807	6.8	2.673	1.073	19.0	6.974	3.233
1.0	1.005	0.01519	3.5	1.492	0.4987	7.0	2.743	1.109	20.0	7.328	3.409
1.1	1.008	0.02196	3.6	1.529	0.5160	7.2	2.813	1.144	21.0	7.681	3.586
1.2	1.011	0.03059	3.7	1.566	0.5333	7.4	2.884	1.180	22.0	8.034	3.763
1.3	1.015	0.04127	3.8	1.603	0.5503	7.6	2.954	1.216	23.0	8.388	3.940
1.4	1.020	0.0541	3.9	1.640	0.5673	7.8	3.024	1.251	24.0	8.741	4.117
1.5	1.026	0.0691	4.0	1.678	0.5842	8.0	3.094	1.287	25.0	9.094	4.294
1.6	1.033	0.0863	4.1	1.715	0.601	8.2	3.165	1.322	30.0	10.86	5.177
1.7	1.042	0.1055	4.2	1.752	0.618	8.4	3.235	1.357	40.0	14.40	6.946
1.8	1.052	0.1265	4.3	1.789	0.635	8.6	3.306	1.393	50.0	17.93	8.713
1.9	1.064	0.1489	4.4	1.826	0.652	8.8	3.376	1.428	60.0	21.46	10.48
2.0	1.078	0.1724	4.5	1.863	0.669	9.0	3.446	1.464	70.0	25.00	12.25
2.1	1.094	0.1967	4.6	1.899	0.686	9.2	3.517	1.499	80.0	28.54	14.02
2.2	1.111	0.2214	4.7	1.935	0.703	9.4	3.587	1.534	90.0	32.07	15.78
2.3	1.131	0.2462	4.8	1.971	0.720	9.6	3.658	1.570	100.0	35.61	17.55
2.4	1.152	0.2708	4.9	2.007	0.738	9.8	3.728	1.605			
2.5	1.175	0.2949	5.0	2.043	0.755	10.0	3.799	1.641	Large	$(\sqrt{2z}+1)/4$	$(\sqrt{2z}-1)/8$

Digitized by Google

3.3. *Case of High Frequency.*

The form assumed by F at very high frequencies may be deduced from the knowledge that it is always a function of z and from the fact that the current is then concentrated upon the outer skin of the conductor. If the depth of penetration of the current is small compared with the diameter of the wire, this depth will be practically independent of the diameter of the wire. Under these circumstances the cross section of the path of the high frequency current is proportional to the circumference of the wire, that, is, to its diameter. Hence the high frequency resistance is proportional to $1/d$ or the ratio of the A.C. to D.C. resistance is proportional to d.

But the ratio is also a function of z, and by (7) these two properties can only be reconciled if the ratio is proportional to z. Thus we deduce that at high frequencies $1+F$ varies as the square root of the frequency and inversely as the square root of the resistivity. The numerical multiplier can only be found by recourse to mathematical analysis, and it is found that

$$1+F=\frac{\sqrt{2}}{4}z=0.354z \quad .. \quad (8)$$

We might go a step farther and assert that when z is not extremely large the above estimate is somewhat low, as the effect of the curvature of the wire must be to restrict the depth of penetration to some extent. In fact to a nearer approximation

$$1+F=\frac{(\sqrt{2}z+1)}{4} \quad .. \quad (9)$$

3.4 *Case of Moderate Frequencies.*

For intermediate frequencies the formulæ are complicated, and tables are necessary. The values of $1+F$ are given in Table I. It will be seen from the table that the simple formula (6) is good enough for most purposes up to $z=2$, and the simple formula (9) when z exceeds 5.

3.5. *Experimental Verification.*

An experimental verification of the law of increase of resistance of a straight wire with frequency has been made by Kennelly, Laws and Pierce.[9] These experimenters used a copper conductor 1.168 cms. diameter and a range of frequency from 60 to 5,000 cycles per second, so that the value of z ranges from zero to 9. Using a value of resistivity as deduced from the D.C. resistance, the following comparison Table holds.

Frequency		60	306	888	1600	2040	3065	3950	5000
R_s/R	Obsd.	1.005	1.108	1.560	2.045	2.27	2.71	3.03	3.37
	Calcd.	1.004	1.111	1.587	2.042	2.28	2.69	3.03	3.36

4. Eddy Current Losses in a Cylinder when Placed in a Uniform Alternating Magnetic Field.

The second type of copper loss in an inductance coil is that due to the general field of the coil. A glance at Fig. 1 shows that for coils in which the turns are well spaced this loss may be determined if we can obtain an expression for the loss in a wire when placed in a uniform alternating magnetic field the direction of which is perpendicular to the axis of the wire. For coils in which a wavy type of winding is employed the direction of the field is no longer at right angles to the axis of the wire. The loss in a cylinder inclined at any angle to a uniform field is capable of solution, but will not be dealt with here as there is no indication that a wavy winding possesses any electrical advantage over a straight winding.

Solutions of the problem of a cylinder in a transverse field which is alternating slowly have been given by many writers. We need only refer the reader to Howe[10] who gives the proof as a preliminary to a treatment of stranded conductors. At the other end of the scale of frequency the simplest form of solution of the problem met with by the writer is that due to Fortescue[11] A more general treatment covering the whole range of frequency and including

[9] *Trans. Amer. I.E.E.*, Vol. 35, Part 2, 1953, 1915.
[10] *Proc. Roy. Soc., A*, Vol. 93, p. 468, 1917.
[11] *Journ. I.E.E.*, Vol. 61, p. 933, 1923.

Digitized by Google

the case where the field is not uniform over the section of the cylinder is to be found in a paper by the present writer.[12]

We will first establish the *form* of the expression for the eddy current loss and then deal in detail with the cases of low and of high frequency.

4.1. *Form of Equation for Eddy Current Losses.*

Let H be the strength of the field and let d be the diameter of the cylinder. Also let R be the D.C. resistance of the cylinder. The magnitude of the eddy current induced by the alternations of the field must be proportional to H, so that, since the energy loss is proportional to the square of the eddy current, it must be proportional to H^2. Now the "dimensions" of an energy loss are those of a resistance multiplied by the square of a current, while the "dimensions" of a field intensity are those of a current divided by a length (*e.g.*, the field intensity at distance r from a long straight wire carrying current I is $2I/r$). In order therefore to get the correct "dimensions" we multiply H^2 by d^2 to make it equivalent to the square of a current and then by R to make it equivalent to a rate of energy loss. The true energy loss must then be equal to Rd^2H^2 multiplied by some *numerical* quantity. The total energy loss in the wire is obviously proportional to its length, but this is provided for as the factor R is proportional to the length of the wire. Hence the numerical quantity sought must be independent of the length and can only depend upon the frequency f, the resistivity ρ and the diameter d of the cylinder. But the problem of determining the most general *numerical* quantity which depends only on the above physical quantities has already been dealt with in Section 3, and we conclude that the required numerical quantity is some function of the variable z defined in equation (7). We therefore write for the rate of energy loss due to the transverse field H,

$$W_h = Rd^2H^2G/8 \qquad .. \quad (10)$$

where G is a function of z and the divisor 8 is merely introduced to simplify certain later equations.

4.2. *Value of G for Low Frequencies.*

If the frequency is low the magnitudes of the eddy currents are small and we may neglect the field they set up in comparison with the inducing field. This amounts to neglecting the inductance of the eddy current paths, so that the magnitude of the eddy currents may be determined using Ohm's Law.

We first determine the eddy current losses in a thin strip placed athwart the field H and then by supposing the cylinder to be built up of such strips determine by addition the eddy losses in the whole cylinder.

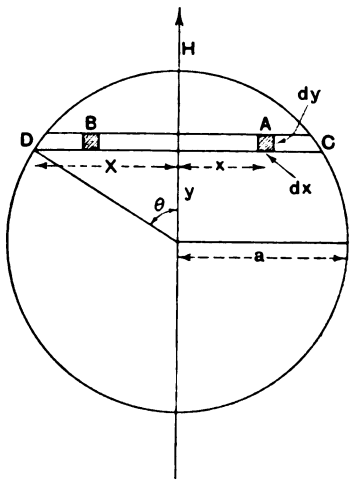

Fig. 3. *The circle represents the cross section of a cylinder of radius* a, *length* l *and resistivity* ρ. *A uniform magnetic field* H *alternating with frequency* $\omega/2\pi$ *is acting parallel to the arrow. Currents are induced in the cylinder which flow out on the right and in on the left.* A, B, *are the sections of path of one of these currents. The E.M.F.* e *producing this current is* 2ωHlx *and the resistance* r *of the current path is* $2\rho l/dx.dy$. *Hence the power loss in the path* A B *is* $e^2/2\,r = \omega^2 H^2 l\, x^2\, dx.dy/\rho$. *The power loss in the whole cylinder is got by integrating with respect to* x *from* o *to* X, *thus obtaining the power loss in the strip* C D, *and then with respect to* y *from* —a *to* +a. *The latter integration is effected by making the substitutions* X = a sin θ, y = a cos θ *and then integrating with respect to* θ *from* o *to* π. *The result is*

$$W_h = \pi\omega^2 H^2 l a^4/8\rho.$$

Referring to Fig. 3 with its explanatory text we see that for low frequencies

$$W_h = \pi\omega^2H^2la^4/8\rho = \pi\omega^2H^2ld^4/128\rho \;.. \quad (11)$$

But $\qquad Rd^2H^2/8 = \rho lH^2/2\pi,$

so that by (10)

$$G = \pi^2\omega^2d^4/64\rho^2 = z^4/64 \qquad .. \quad (12)$$

This simple form will hold for values of z up to about unity.

[12] *Phil. Trans, A*, Vol. 222, p. 57, 1921.

Digitized by Google

The equation is more useful than the corresponding one for F, as many cases arise in which, because of the large value of H, the eddy losses are of importance even when G is small. From equation (11) we see that the eddy losses vary directly as the fourth power of the diameter and inversely as the resistivity. As regards the change with diameter the loss is varying in an opposite way to the loss due to a current flowing in the wire. It thus appears that in an inductance coil any attempt to reduce the copper losses by employing wire of the maximum possible diameter may be defeated by the very large loss due to the general field.

As regards the change with resistivity, it is seen that if it is necessary to use metal rods in the neighbourhood of an inductance coil these rods should preferably be of *high* resistivity when the frequency is low. The term "low" frequency requires careful definition. The relevant quantity is the factor z, which involves the wire diameter and its resistivity as well as the frequency. When the term "low" frequency is employed with reference to wires or cylinders it will be taken to mean that z is less than unity.

4.3. *Value of G for High Frequencies.*

The form of G at extremely high frequencies may be deduced from the principle that if the eddy currents are sufficiently powerful they will practically annul the field within the substance of the wire. In the extreme case the distribution of the eddy current is as shown in Fig. 2(*b*) with the two crescent-shaped sections of current path concentrated closely upon the outer surface of the wire. The combined effect of the inducing field and that produced by the eddy currents is that the lines of force curve round instead of passing through the cylinder. In fact, the distribution of the lines of force at extreme frequencies are exactly analogous to the lines of flow of an ideal fluid past a cylindrical obstacle, and mathematically the problem may be dealt with by an analogous system of equations. It is important to notice that this distortion of the field increases the field intensity along the diameter of cross section which is perpendicular to the field and weakens it in directions parallel to the field. These facts will be made use of later in connection with single layer coils.

The depth of penetration of the eddy currents is practically independent of the diameter of the wire, but the dimension of the crescent-shaped path parallel to the direction of the field is equal to the diameter. Hence the cross section of the path is proportional to the diameter. Now the energy dissipated by the eddy current is inversely proportional to the resistance of its path, so that it is proportional to the cross section of the path or to the diameter of the wire. Since in (10) Rd^2 is independent of the diameter it follows that G is proportional to the diameter of the wire. This can only be so if G is merely a multiple of z. The complete theory shows that

$$G = \sqrt{2}z/8 \quad .. \quad .. \quad (13)$$

For finite values of Z this is only an approximation, being the first term of a series. If we include the next term we have

$$G = (\sqrt{2}z - 1)/8 \quad .. \quad (14)$$

This formula is a good approximation for values of z greater than 5.

From (13) we see that the eddy losses still increase with diameter of wire but the rate of increase is not so rapid as at low frequencies, being proportional to the first instead of the fourth power of the diameter.

From (10) and (13) we see that the eddy loss varies directly as the square root of the resistivity, so that at *high* frequencies improvement is obtained as regards losses in neighbouring metal rods by reducing the resistivity. This is opposite to the law at low frequencies. Therefore as the resistivity is increased there is for any particular rod a resistivity giving maximum eddy losses and any departure from this resistivity will reduce the losses.

When the value of z is such that neither of the simple formulæ (12) or (14) hold, a much more complicated mathematical analysis is necessary, and the values of G given in Table I. must be used.

(*To be continued.*)

Digitized by Google

The Mystery of Fading.

Some Notes of Observations taken on Broadcast Stations.

By Oliver Hall, D.Sc. **[R113.1.009**

EVERY possessor of a wireless receiving set who has made a practice of receiving telephony from a distant broadcasting station is familiar with the perplexing phenomenon of "fading." Yet of the very large number of such possessors of wireless sets, only a small percentage is sufficiently interested in the phenomenon to take careful observations when fading is noticeable during the reception of a distant station.

Now it is highly probable that a satisfactory explanation of fading will only be forthcoming after a very large number of observations has been collected and examined. Hence it is that fading constitutes a most promising field of investigation for the wireless experimenter who is interested in the problems connected with the travel of wireless waves through the ether.

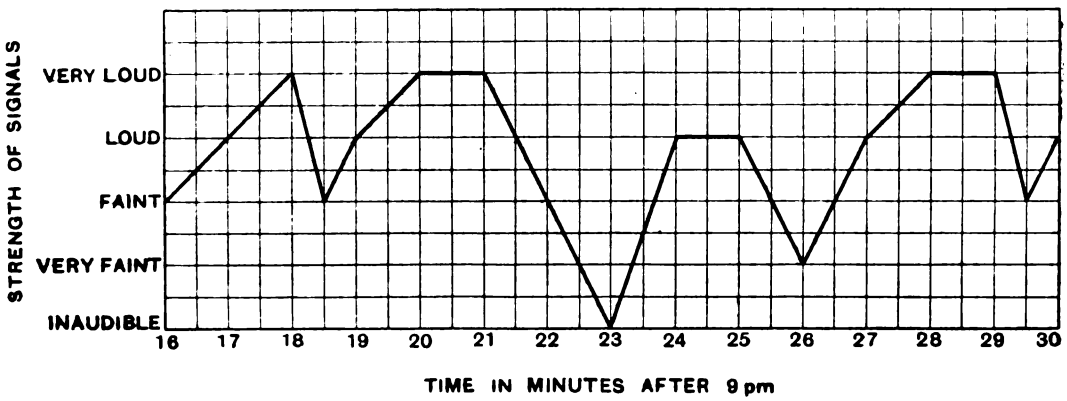

Fig. 1.

According to some careful observers, fading occurs at regular intervals. One such observer has placed on record the following curious case: An item, which was being simultaneously broadcast, was first received from London and this station was found to be fading regularly at intervals of three minutes. The same musical item was next received from Cardiff and, from the Welsh station, fading was found to be occurring every five minutes. The receiver was then set to a position intermediate to Cardiff and London on the tuning condenser and, although the fading was less distinct, it was found to be occurring at intervals of fifteen minutes.

It is unusual however, for fading to take place as regularly as this. In fact, such regularity is scarcely in keeping with the generally accepted explanation that fading is caused by the absorption and reflection of the waves by *irregular* masses of ionised gases in the upper atmosphere, or by conducting layers, the effects of which vary considerably with the constantly changing atmospheric conditions.

The object of the present article though, is not to discuss fading from a theoretical standpoint, but rather to describe certain observations recently made by the writer and to suggest the carrying out of similar observations by others interested in the phenomenon of fading.

Since the advent of the warmer weather and the longer days, there has been a very noticeable increase in the fading of the Bournemouth broadcasting station as received by the writer at a receiving station situated one hundred and seventy miles north of Bournemouth.

Digitized by Google

In order to get a thorough understanding as to what was happening, observations were made of this Bournemouth fading on three successive nights. The entries made in the observation book for the first of these three nights were summarised in the curve reproduced in Fig. 1.

The receiver used in making these and subsequent observations was a three-valve receiver, a detector valve followed by two low-frequency amplifying valves. A loud-speaker was used and this was placed at a distance of twelve feet from the observer. Keeping a careful watch on the movements of the seconds hand on a small wrist watch, an estimation of signal strength was made at the end of each minute and also at the half-minute when necessary. The observations were made aurally according to the scale given on the left of Fig. 1. It is scarcely necessary to say that aural observations of this kind cannot be compared with instrumental observations, but, where instrumental observations are not possible, aural observations of signal strength are not to be despised.

The first important point to notice with regard to the curve in Fig. 1 is that the times 9.18½, 9.23, 9.26, and 9.29½, when signal strength was at a minimum, are separated by time intervals of 4½, 3 and 3½ minutes. This irregularity in the intervals of time between successive fadings was noticeable in all subsequent observations.

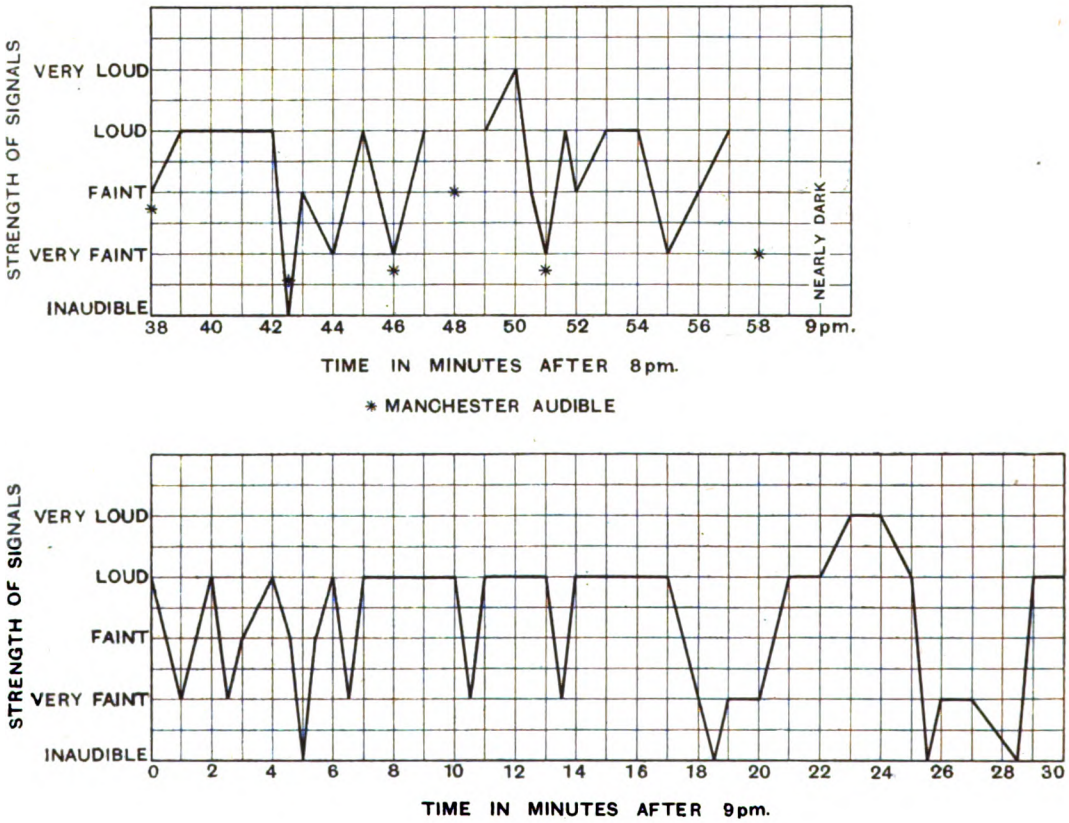

Fig. 2.

A second important point which may be noticed with regard to the observations illustrated in Fig. 1 is that the duration of minimum signal strength is much shorter than the duration of maximum signal strength.

The next set of observations refers to the night following that on which the first set of observations was taken. The observations

Digitized by Google

on this second occasion were taken before and after dark.

For the first twenty minutes of this second set of observations, a note was made when Manchester was audible in the loud-speaker. As already stated, Bournemouth is one hundred and seventy miles to the south of the writer's receiving station. Manchester is forty miles to the north-west. The times at which Bournemouth was so faint as to allow Manchester to become audible are indicated by an asterisk in Fig. 2, the figure in which the second set of observations is illustrated in the form of a diagram.

that one period of fading may have been missed owing to an interval in the Bournemouth programme or owing to interference.

Taking the time interval between well-marked successive occasions of fading, we get the following time intervals in minutes: 1½, 2, 1, 3, 1½, 2½, 1½, 4, 3, 5, 3. The only real feature of these time intervals is their irregularity.

Practically every case of fading in this second set of observations took place quite suddenly. The return to better signal strength was also rapid in most cases.

The third set of observations, taken on the

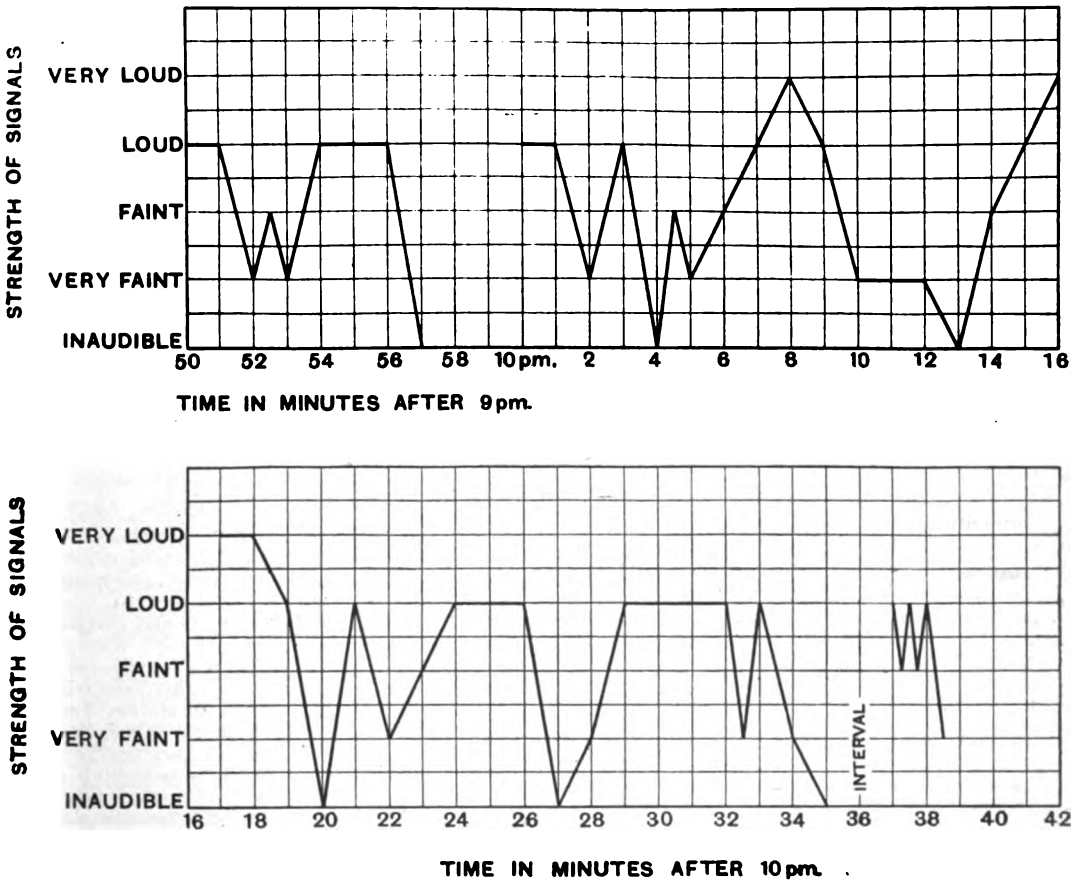

Fig. 3.

In the second set of observations, the times of minimum signal strength were: 8.42½, 8.44, 8.46, ?, 8.51, 8.52, 8.55, ?, 9.01, 9.02½, 9.05, 9.06½, 9.10½, 9.13½, 9.18½, ?, 9.25½, 9.28½, the question mark indicating

third of the three successive nights, are illustrated in Fig. 3. In this set of observations, the time intervals in minutes between successive occasions were: 1, 4, 2, 1, 5, 3, 1, 6, 2, 5, 5½, 1½, 1, a few seconds, 1½.

Digitized by Google

Irregularity is again the chief feature of the observations. The comparatively long periods of strong signals are also noticeable.

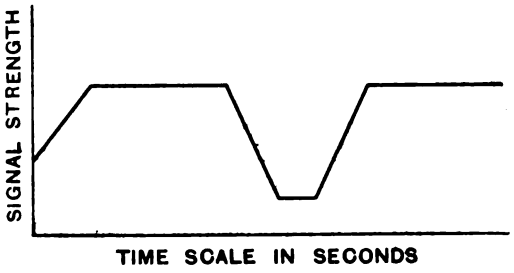

Fig. 4.

The three sets of observations now described were taken on three successive nights when conditions were presumably normal. If there is one thing above all others these observations show, it is that fading takes place in a most irregular manner. Probably the best way of representing such observations in a general sort of way, is by means of a diagram similar to that shown in Fig. 4, *i.e.*, loud signals followed by quick fading, with a short period of minimum signal strength and a rapid recovery to loud signals again.

In conclusion, the writer would like to emphasise the fact that fading is an irregular phenomenon, and that the worst thing an investigator can do is to start off with the preconceived notion that fading is connected with some definite numerical quantity such as wavelength or transmitting power.

Among the Experimental Transmitters.

THE Technische Hoogeschool, Kanaalweg, 2b Delft, Holland, operates under the call-sign NPA9. The laboratory contains various transmitters working on different wavelengths and these are distinguished by different suffixes, *e.g.*, PA9a, PA9b, etc. Reports and correspondence will be welcomed and should be addressed to the Radio Laboratory at the above address.

Mr. E. J. Simmonds (G2OD), Gerrards Cross, has been carrying out tests on a 23-metre wavelength with Egypt and succeeded in establishing communication by telephony with an experimenter in that country on 15th and 16th February with an input of only 4 to 5 watts. He sent, by speech, a difficult combination of figures, input powers, etc., all of which were perfectly received by the Egyptian operator and repeated back on telegraphy. Mr. Simmonds was using an Osram T250 transmitting valve and the total absence of distortion was specially remarked on. The strength of his signals was given as R9. Mr. Simmonds believes that this is the first time a 23-metre wavelength has been used successfully for long-distance telephony on such input and the results are the more surprising because, during the same period, his 45-metre set with an input of over 100 watts failed to convey intelligible speech to the same station.

Mr. C. H. Targett (G6PG), 21, High Street, Dartford, who has been experimenting with an underground aerial, was in communication, on 22nd February, with P3GB, G. de Bianchi, at Funchal, Madeira. He was transmitting on a wavelength of 44.8 metres with an input of 8 watts, using 230 volts H.T. from D.C. mains, M.O. DE5 valve and a Hartley circuit. The aerial is 70 ft. long, of which 50 ft. is buried to a depth of from 18 to 24 in. Signals were reported R5 on o.v.1. receiver.

Capt. Duncan Sinclair (G2OC) "Morven," Shepperton-on-Thames, continues working on 23 metres but is unable to obtain many answers. Some excellent tests have been conducted with various European stations but, though several American stations have been heard at good strength on about 30 metres, no long-distance reports have yet been received. G2OC is very anxious, for special reasons, to work with America, Canada, and South Africa. Regular tests are made every Sunday at 10.00-10.30 G.M.T. with N PC2 and, during the afternoon, from 14.00 G.M.T. onwards. Reports will be very welcome.

Amateur transmitters in Madeira have adopted the International prefix "P" on account of the geographical position of the island in relation to Portugal. Their call-signs will begin with the figure "3" to distinguish them from those in Lisbon which have "1" as their first component. It is understood that Portugal and Madeira will adopt the system, already in use in America, Australia, New Zealand and other countries, of indicating the district in which the station is located by the initial figure or letter of the call-sign.

We understand from Mr. C. A. Jamblin (G6BT), the Hon. Organiser of the Transmitter and Relay section, that the Radio Society of Great Britain has received several hundred QSL cards from abroad for British amateurs which, so far, have not been claimed. Transmitters who are expecting such cards are asked to forward stamped and addressed envelopes to Mr. C. A. Jamblin, 82, York Road, Bury St. Edmunds, Suffolk, who will forward any cards that may be awaiting them or, if there are none, will file the envelope for future use. Envelopes should not be smaller than 6 in. by 4½ in., preferably of the thin foreign variety, and should have the addressees call-sign clearly marked on the left-hand top corner.

Digitized by Google

The Lorenz High-Frequency System for Radio Transmission.

By F. W. Gillard, A.M.I.C.E. **[R421**

THE possibility of generating radio frequency currents by means of alternators has intrigued many talented engineers, and while the design and operation of alternator systems has hitherto been extremely difficult, it may be that this very difficulty has been the cause of some of the attempts.

The three best known alternator systems are :—

(1) *The Goldschmidt,* an alternator-transformer.—The machine generates a medium frequency, while windings on both stator and rotor multiply this up to the required radio frequency. It will be seen that high voltages and losses are concentrated in the machine itself. Efficiency of Goldschmidt machine at Tuckerton 54 per cent. measured on motor input to antenna* kW.

(2) *The Alexanderson.*—This is a true radio-frequency alternator, generating in its own windings the output at the frequency desired. It, of course, has many of its losses, etc., concentrated in the machine itself. The 200kW. set described† is driven by a 600 h.p. induction motor, giving (apparently) an efficiency of 44.7 per cent.

(3) *The Telefunken.*—This is a system of an alternator of moderate frequency, from 5,000 to 8,000 cycles, with frequency doublers and triplers in cascade sufficient to attain the frequency required.

The efficiency of Nauen‡ at 12,600 metres, measured from motor terminals to antenna kW. = 66 per cent. at full load of 620 kW. motor input. At λ = 6,300 metres, 53 per cent.

* Eccles, *Handbook of Wireless Telegraphy.*

† Bucher, *General Electric Review,* Oct., 1920.

‡ Ing. Felix Linke, *Zeit. des Vereinse D.E.,* 20th Nov., 1920.

As is well-known, many different schemes of frequency doubling and tripling have been devised and perfected. The main interest in the invention under notice is that in a single transformer and without exciting coils for D.C. current, it is possible to achieve radio frequency output at one step. With this brief introduction we propose to describe in moderate detail a complete installation, consisting of an alternator of moderate frequency (5,000 to 8,000) and its frequency changer and circuits, the work of Dr. Karl Schmidt, of the Lorenz Co.

The Alternator.

The machine is of the inductor type and of constant reluctance. Figs. 1 and 2 are respectively a part end elevation and part cross section of rotor and stator. On the shaft *A* is mounted a cast-steel rotor *B*, having slots and teeth *C*. The stator frame

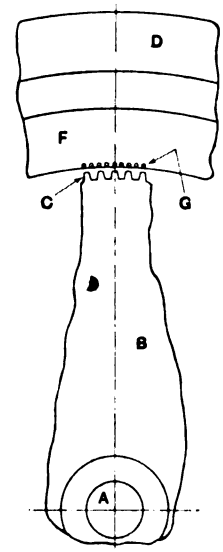

Fig. 1.

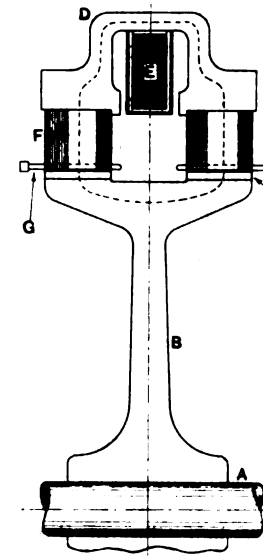

Fig. 2.

Digitized by Google

D is also of cast steel, cored out to the shape shown to accommodate the field winding *E*. The portion of the stator in magnetic proximity to the rotor is provided with laminations *F*, which support the A.C. windings *G* laid zigzag as shown. The two sections of the stator are wired separately and may be connected in series or parallel. Also if the two halves of stator and rotor are arranged separately, the output from each half can be utilised at separate radio frequencies for separate transmission.

The machine generates a medium frequency, 5,000 to 8,000 cycles per second, at speeds up to 3,000 r.p.m., at a low-tension. The usual figure is 500V with the midpoint earthed. The insulation is therefore not difficult.

The field coil *E* is wound and mounted in the stator circumferentially as shown. This gives a magnetic circuit as shown by the dotted lines. The reluctance of the magnetic circuit is constant, but as the teeth of the rotor pass the corresponding conductors of the armature, local variations of flux take place, so generating an alternating E.M.F. The iron losses through eddy currents and hysteresis are obviously very small. The rotating parts are therefore seen to be without windings and of robust construction. The circumferential speed never exceeds 115 metres per second, a value of known safety.

Adequate cooling can be provided by air, water or oil. The grooves between the rotor teeth are also arranged to cool the field coil, as a fan. The efficiency of this machine may be taken as comparable to an ordinary 50 cycle alternator in powers of 50kW. and upwards, while its development for small powers of ½kW., etc., is remarkable.*

The motor for driving the alternator is usually an ordinary high speed compound wound interpolar machine. It is preferably slightly under-compounded, so that speed may fall *slightly* with load. Referring now to Fig. 9, the field winding *SC* is in series with two rheostats R_1 and R_2. Of these, one, R_2, is arranged as a speed control rheostat. This speed control gear forms the last item of the motor alternator unit, and is shown in Fig. 3. It consists of a hollow disc *A* keyed on to the shaft of the alternator. This disc carries two fixed contacts *B*, four clips *C*, and two springs *D*, each carrying another contact *E*. On the shaft are two insulated slip rings *F*, each connected to one of a pair of contacts, the other pair being spare and of great use to ensure balance. Each fixed contact *B* is adjustable in its clip by a threaded portion. The action is as follows: With the set running at speed the spring moves out by centrifugal force. When the spring is at the topmost position of its travel, the centrifugal force is lessened by the amount due to the mass of the contact and a portion of the spring. At the bottom position, the two forces are additive. Therefore between two speeds, the first at which contact of the contacts just begins and the second at which

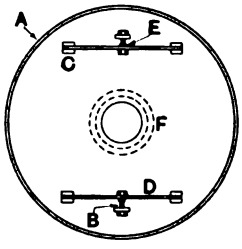

Fig. 3.

contact becomes continuous, the contacts touch for a greater or less portion of the time of each revolution. These two speeds can be adjusted by varying the position of contact *B* in relation to contact *E*. When the contacts *B* and *E* are closed they operate a small relay which in turn shorts the rheostat R_2 and so increases the field of the motor. The correct adjustment of R_1 and R_2 contacts *B* and *E* will hold the speed constant with key up and down to 1/100 per cent.

In the case of large units, the relay is used to control small auxiliary machines, which in turn act on the driving motor.

The Frequency Changer.

This may be aptly termed the "soul of the system." It has long been known that an alternating current of frequency *n* could be transformed to a frequency of 2*n* or 3*n* with good efficiency and wave form by means of static frequency multipliers. But

* G. W. O. Howe, *Electrician*, 8th May, 1925.

Digitized by Google

doubling or tripling is the limit* of this type of apparatus in a single step. But the frequency can be raised any odd number of times by the Lorenz method up to a limit where the efficiency becomes too low for practical results.

Fig. 4 shows a section of one type of this transformer, in which *AA* are soft iron

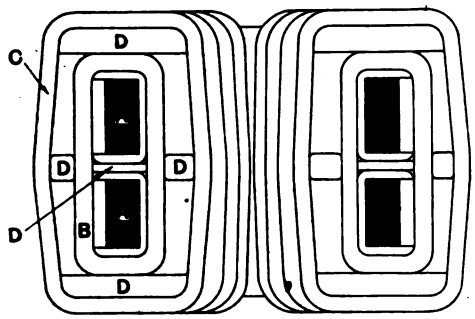

Fig. 4.

cores, consisting of very fine soft iron wire enamel insulated, and wound on circular bobbins of insulating material *D*; *B*, and *C*, H.F. windings of stranded and insulated wire wound in toroid form over the iron, well spaced and insulated from the iron. The two windings are connected in series. The whole transformer, core, windings and insulation is immersed in oil in an iron tank, with suitable terminals for the ends of the windings and sundry taps.

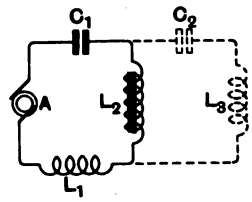

Fig. 5.

Fig. 5 shows a skeleton circuit for purposes of explaining the action of this transformer. If an alternator *A* be connected as shown to an inductance L_1, a condenser C_1 and an iron-cored choke coil L_2 and the values of these inductances and condenser be adjusted to give the circuit resonance with the alternator, a heavy current will flow in AL_1, L_2, C_1. Now suppose that the iron-cored choke L_2 has a magnetic circuit that is easily saturated by the current in AL_1, L_2, C_1 at resonance. We shall then have a set

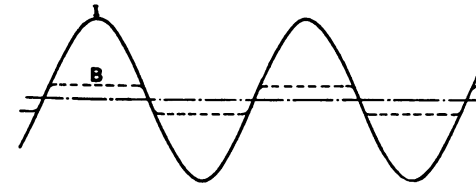

Fig. 6.

of conditions as shown in Fig. 6 where *I* is the curve of current in the circuit, shown here as a sine wave. *B*, the curve of state of magnetism of iron core, while *E*, Fig. 7, denotes an induced E.M.F. across the coil at each reversal of magnetism *B*. This induced E.M.F. is seen to be in alternate directions and of decided peak form shown in Fig. 7. The impedance of the iron-core coil L_2 is of course negligible when saturated.

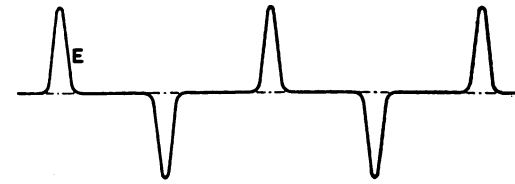

Fig. 7.

Suppose now we connect across L_2 another circuit C_2L_3 and tune this to an odd multiple of the alternator frequency. We shall then have in $L_2C_2L_3$ a series of very slightly damped high frequency currents as shown in Fig. 8. It is thus seen that this amounts to shock excitation of the secondary circuit and is entirely independent of any harmonics the machine may have or may not have.

The efficiency of this transformer may reach 95 per cent. It is of course less when

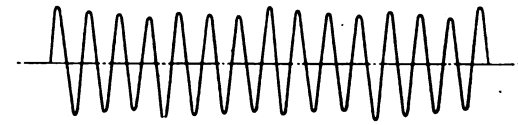

Fig. 8.

very short waves are required from the secondary. But it should be observed that its losses are almost entirely iron losses.

* Eccles, *Handbook of Wireless Telegraphy and Telephony*, gives several methods.

Digitized by Google

We can now pass to the diagram of a complete transmitting plant as shown in Fig. 9.

M is the motor, complete with D.P. switches, circuit breakers and fuses, ammeter *A*, voltmeter V_1, starter *ST*, shunt field coils *SC*, and field rheostats R_1 and R_2. The contacts *CC* are the speed control contacts on the alternator shaft, fed from the local battery *B*. These contacts and battery operate the relay *R* which in turn short circuits the rheostat R_2.

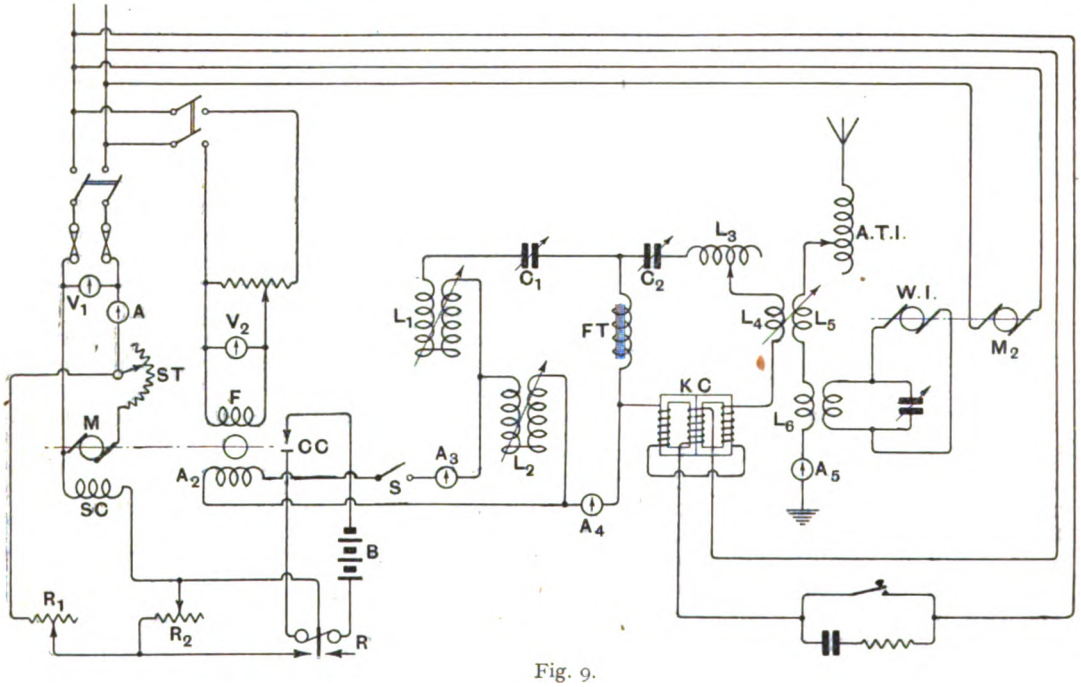

Fig. 9.

A_2 is the alternator armature, *F* its field coil, with a voltmeter V_2 across it. The alternator circuit consists of A_2, the armature, a single pole switch *S*, ammeter A_3, variometer inductance L_1, condenser C_1, frequency transformer *FT*, ammeter A_4, and variometer inductance L_2.

The function of the variometer L_2 is of interest. Without this inductance the low frequency current of circuit L_1, C_1, *FT*, L_2 (practically wattless) would traverse the machine. The kW. output of the machine is limited by its K.V.A. capacity. But by inserting L_2 the wattless current does not traverse the machine, which latter only supplies the energy current and so works on a high power factor.*

The high frequency circuit consists of the frequency changer *FT*, condenser C_2, inductance L_3, coupling coil L_4, and iron-cored choke coil *KC*. These two circuits,

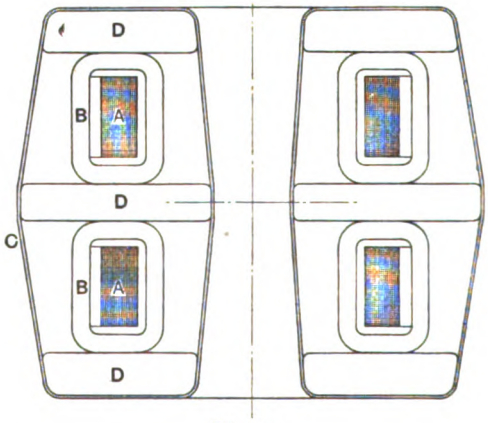

Fig. 10.

* British Patent No. 194,007.

Digitized by Google

the alternator circuit and the high frequency circuit carry the currents shown in Figs. 6 and 8 respectively, while the graph of tension across the frequency changer *FT* is shown in Fig. 7.

We can now amplify the particulars of Figs. 6, 7, and 8. These refer to a 40kW. alternator, with 160 teeth on the rotor, giving a frequency of 7,150 at

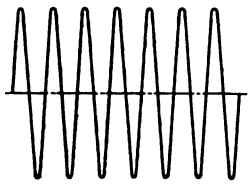

Fig. 11.

2,680 r.p.m. The high frequency circuit is tuned to the seventh harmonic giving a high frequency of 50,050, equal to a $\lambda =$ 6,000. Fig. 11 shows the current in the antenna, all these figures being based on actual oscillograph records.

The choke coil *KC* is used for keying. A section of one type is shown in Fig. 10. It will be seen to be similar to the frequency changer shown in Fig. 4. But the keying coil has less windings for H.F. current, as it is not desired that the H.F. current should saturate the iron.

There are, as before, two iron cores *A* and *A*, each with its separate H.F. winding *B*, so connected that each winding induces magnetic polarity opposite to the other. Wound as a toroid around both cores and H.F. windings is the D.C. winding *C*.

When current flows in the D.C. winding, the iron is saturated and the impedance of the coil to H.F. currents is negligible. When the D.C. is absent, the impedance is ample to prevent the flow of H.F. current. The opposing polarity of the two iron cores is to prevent any induced H.F. E.M.F. in the D.C. leads.

The keying coil is immersed in oil in an iron tank similar to the frequency changer. It is interesting to note that 200 watts D.C. will key quite perfectly 25kW. in the antenna.

The aerial circuit is quite standard and consists of the inductance *ATI*, coupling coil L_5, variometer L_6, and ammeter A_5, together with the usual German visual wave indicator *WI* consisting of a rotating tube filled with helium and driven by its motor M_2.

For telephony, of course, the keying coil *KC* would be controlled by microphone currents suitably amplified, reminiscent of the Alexanderson magnetic amplifier.

The details given here are for a station of moderate size—25kW. in the antenna—but are correct in principle for the system. It will be seen that losses in the alternator itself are small and that practically all the other losses are concentrated in the iron of the frequency transformer and keying coil. The system has been successfully applied in powers from 200 watts in the antenna to 1,000kW. motor input. This last size gives an overall efficiency, antenna kW. to motor input, of 75-80 per cent.

Digitized by Google

Inductance Coils Quantitatively Compared.

By A. L. M. Sowerby, B.A., M.Sc. **[R240**

THE writer has recently commenced an investigation into the high-frequency resistances of different inductance coils, and offers here some preliminary results of his experiments.

The object of the preliminary investigations here detailed was to discover, by means of some careful comparative measurements, the relative high-frequency resistances of a number of coils of different types, both commercial and home-made, and, if possible, to determine whether the "low-loss" coil, of spaced thick wire on a skeleton former, was sufficiently superior to all others to justify the bulk and difficulty of winding that it necessarily involves.

Method.

With the enthusiastic assistance of a friend (Mr. Cedric Vaughan-Spencer) a Moullin voltmeter was set up as in Fig. 1,

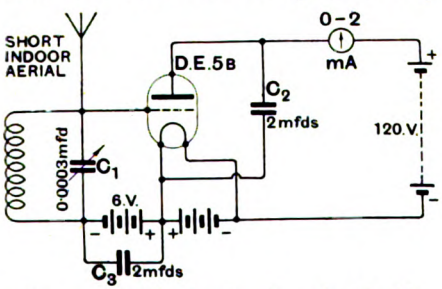

Fig. 1. *Circuit showing how the Moullin Voltmeter was set up.*

using anode rectification in order to avoid the heavy damping inseparable from grid rectification. The coils to be compared were connected in turn in its grid circuit, and tuned by the small variable condenser C_1 to the frequency of 2LO, or to that of a local oscillator equipped with a tiny aerial. In either case a small aerial, consisting of a few feet of wire, was used as an energy collector, in order that variations in the amount of energy picked up by the coils direct might be very small compared with the total energy collected. The variations in plate current caused by tuning the coils to be tested to resonance with 2LO or the oscillator were then compared, and the coils arranged in "order of merit" by this means.

All the coils tested were compared, in all the various experiments, with a standard "low-loss" coil, 4½ inches in diameter, wound with 20-gauge bare wire on a skeleton former, the turns being spaced about fourteen to the inch. The inductance of this coil was about 250 microhenries; all coils tested (with the exception of some multi-layer coils) were adjusted to the nearest half turn to tune to 2LO or the local oscillator with the same setting of the tuning condenser C_1, so that the L/C ratio remained sensibly constant throughout the experiments. In measurements of this type it is essential that this precaution be not neglected, as otherwise very misleading results are obtained, the deflection observed at any fixed frequency being greater the greater the inductance of the coil. In both sets of readings, the tubes used as formers for the coils were "waxed cardboard" tubes sold for the purpose, which were used without any further treatment.

In all coils wound on tubes, the turns were as close together as ordinary hand-winding would permit; no wax or shellac was used on the wire.

The first series of readings were taken on 2LO's carrier, at a distance of about 500 yards from that station; only one or two special coils were wound for the experiments, the bulk of the measurements being made on coils that the writer already possessed.

The results, which are of general interest only, are summarised in Table I.

Details of Moullin Voltmeter.

Valve used, DE5b, H.T., 120 volts (accumulator); grid-bias, —6 volts (accumulator); L.T., 6 volts (no rheostat). The whole load in the anode circuit was shunted by a 2-microfarad condenser.

It will be seen that, although no very definite conclusions can be drawn from this series of measurements, the coils of finer wire, although very markedly inferior to the low-loss coil, have a resistance lower than might have been expected, and are,

Digitized by Google

in fact, better than the best multilayer coil, whether commercial or not, that was examined.

TABLE I.

Steady plate current of voltmeter: 675 microamps throughout.

Coil.	C_1 (degrees.)	Anode Current. (μA)	Deflection. (μA)
Standard ..	93	2,600	1,925
4½" tube, 28 D.S.C.	89	2,150	1,475
4½" tube, 22 D.S.C.	94	2,350	1,675
4" tube, 34 D.S.C.	86	1,950	1,275
4½" tube, 22 D.S.C.	52	2,575	1,900
Best commercial coil tested ..	54	2,000	1,325
Other commercial coils ..	Various	830 to 1,950	155 to 1,275

A further series of experiments was then undertaken, and a number of coils were wound with various gauges of wire to the same inductance value, in order to determine whether, as has recently been stated,* the D/l ratio of the coil plays a greater part in determining the resistance than the gauge of wire used, and the spacing between turns.

For this series of experiments, made at a time when 2LO was silent, the local oscillator, tuned approximately to 365 metres, was used; to swamp direct pick-up on the coil the aerial was retained, and the oscillator was placed some ten feet from the Moullin voltmeter.

The results are shown in Table II, a full description of the coils being given in Table IIA.

Steady plate current, 400 microamps. This was checked repeatedly throughout the whole series of experiments, and there was no variation readable on the 0—2 milliammeter employed.

The readings for the low-loss coil taken as standard are repeated in the table wherever they were checked in the actual experiment; no measurable difference in the readings for the coil were observed during the evening, thus confirming the constancy of the oscillator output, and of the *extremely* loose coupling between it and the voltmeter.

* J. H. Reyner, *Wireless Weekly*, 11th and 18th November, 1925.

In order to confirm further the reliability of the method employed, experiments were made under widely varying conditions; in all cases the same "order of merit" was obtained, with approximately the same relative differences between the coils.

TABLE II.

Coil.	C_1 (degrees.)	Anode Current at resonance. (μA)	Deflection. (μA)
Standard low loss	91	1,600	1,200
1	89½	1,250	850
2	91	1,060	660
3	91	1,060	600
Standard ..		1,600	1,200
4	92	955	555
5	90½	940	540
Standard ..		1,600	1,200
6	91	1,400	1,000
7	90½	1,225	825
Standard ..		1,600	1,200
8	91	1,225	825
9	90½	1,015	615
Standard ..		1600	1,200
10	90	995	595
11	90	945	545
12	92	830	430
Standard ..		1,600	1,200
4½" tube, 20-gauge bell-wire ..	90.5	1,525	1,125
Hank-coil of 20-gauge bell-wire	91½	690	290

TABLE IIA.

Coil No.	D/l	Diam. ins.	Length (approx. ins.)	Wire S.W.G.	Turns	D.C. resistance approx (ohms)
		tube		D.S.C.		
1	1.4	3"	2.1	22	66	0.67
2	2.8	3"	1.07	28	58	2.1
3	3.1	3"	0.97	30	57	3.0
4	5.1	3"	0.59	34	52	4.9
5	5.5	3"	0.55	36	50	6.9
				D.C.C.		
6	1.05	3"	2.88	22	70	0.72
7	2.1	3"	1.43	28	61	2.2
				D.S.C.		
8	2.8	4"	1.5	22	46	0.62
9	5.8	4"	0.69	28	40	1.9
10	6.1	4"	0.65	30	39	2.7
11	10.0	4"	0.4	34	35	4.4
12	10.6	4"	0.38	36	34	6.3

Digitized by Google

It is not claimed that these figures can give absolute values for the resistances of the coils examined, but they do very definitely arrange the coils in "order of merit" and, further, give a very fair numerical idea of their relative high-frequency resistances.

In plotting a curve of wire-diameter against deflection it was discovered that the points did not lie on as smooth a curve as one would like, from which it followed that some unrecognised source of minor error was at work. Breathing on a coil at once revealed the probable cause of the variations; an immediate reduction of the deflection from 825 to 750 microamps followed, a change that showed clearly that any slight difference in the dampness or method of handling of the coils would be enough to account for the irregularities of the curve, indicating that proper precaution would have to be taken in future experiments to make the coils moisture-proof.

Results.

The general direction of the curve, after allowing for all inaccuracies, is nevertheless perfectly unmistakable; the finer the wire the higher the resistance in both series; and if, as has been claimed, there is an optimum D/l ratio, its effect is entirely masked in the present experiments by other far more potent factors.

The author of the article already referred to further states that owing to its favourable D/l ratio, a hank coil has a resistance approximately equal to that of an equivalent solenoid or low-loss coil; reference to the figures obtained by the present writer will show that he was completely unable to confirm this, the resistance of the hank coil being such that the deflection given by it was about one-quarter of that given by the low-loss coil used as standard, or by the corresponding solenoid.

A preliminary glance at the effect of spacing is given by comparison of the two 3-inch coils wound with cotton-covered wire with the corresponding coils wound with silk-covered wire; the slight extra spacing afforded by the thicker covering results in a very marked decrease in resistance.

The writer's further results, which he hopes to communicate later, indicate definitely that the variation here *is* due primarily to the change in the spacing, and not to the difference in dielectric involved in the substitution of cotton for silk.

Conclusion.

It is an indication of the difficulty of such measurements as these, that two independent investigators should come thus to diametrically opposite conclusions; it is to be hoped, however, that with improvements in technique such divergencies will disappear. The writer, however, feels that as he is supported in his results by the whole trend of modern practice, his method is reliable for the comparison of coils with identical inductance values, and he proposes to continue his investigations along the same lines.

Digitized by Google

The Use of Small Receiving Valves for Transmitting.

By A. G. Wood. **[R344.3**

THE writer having recently carried out a number of experiments in transmitting, using receiving valves, an account of the results may be of interest to other experimenters.

For the tests Cossor P1 valves were used. Now a Cossor valve will normally work on about 3½ volts on the filament and 30 to 80 volts on the plate, and using these values very good results are obtainable for receiving. The writer decided to use a valve of this type for transmitting. The principal reason for using receiving valves was, in the first place, financial, but after a few preliminary tests the possibilities were revealed, and further tests were made.

several other circuits were tried without such success. H.T. supply consisted of about 500 volts full-wave rectified A.C., sometimes smoothed and sometimes more or less "raw."

The voltage applied to the filament was at first five and finally six and under these conditions the valve appeared to stand up extremely well. The preliminary tests were carried out using D.C. on the filament; but afterwards A.C. was substituted without any drop in efficiency.

The thermionic flow in a receiving valve operating under normal working conditions is generally in the neighbourhood of two or three milliamps. On this particular

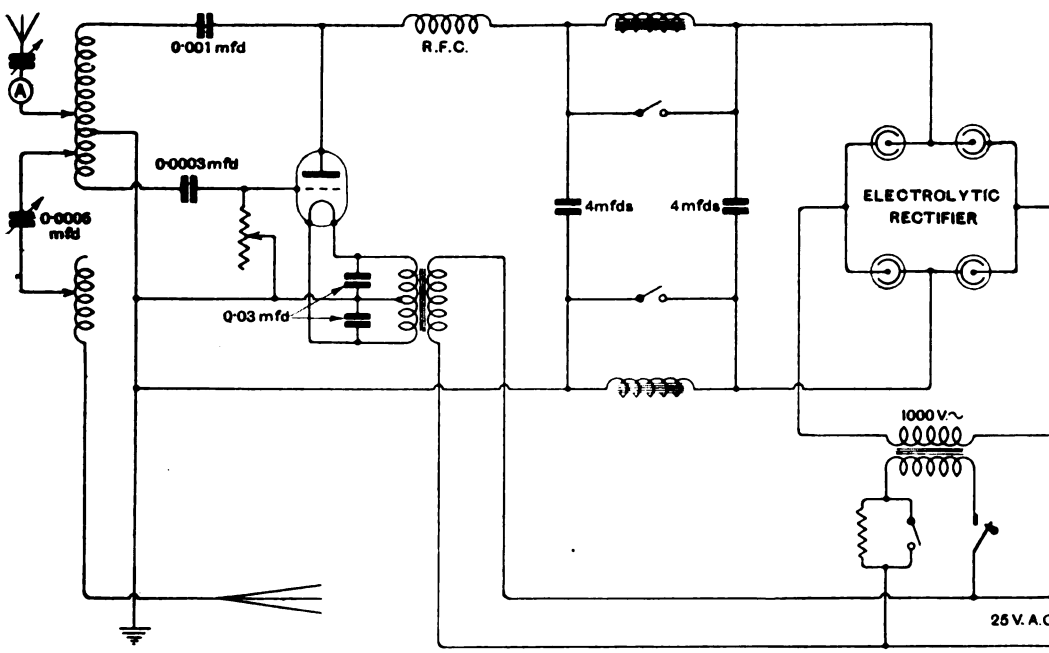

Fig. 1. *The "Hartley" circuit used in the experiments referred to in the article.*

The circuit used, Fig. 1, was the "straight Hartley." This circuit appears particularly adapted for low power valves, as

circuit the milliammeter registered no less than twenty milliamps. On this load it was possible to work speech without the valve

Digitized by Google

overheating, provided several points were taken into account. In the first place, a grid-leak was used consisting of two electrodes immersed in rainwater. Thus, the value could be adjusted to a nicety by varying the amount of the electrodes immersed. This was very critical, and if it was at all out of adjustment the valve would immediately heat up and "blue." Next, it was absolutely necessary to keep the aerial circuit exactly in tune, otherwise the same effect would be noticed.

The usual procedure for tuning was as follows: Resistance was inserted in the primary of the high tension transformer and both the smoothing chokes in the H.T. side were put into circuit. In addition the filament was somewhat reduced. The power was then switched on and careful adjustments made for best radiation. Having adjusted everything correctly, the filament was increased to the full six volts and the resistance taken out of the H.T. circuit. An immediate increase in radiation was, of course, noticed. The grid-leak had to be readjusted slightly as the power went up. After several tests on speech with the full 10 watts it was decided to ascertain what power could be employed for C.W. or intermittent signalling. The chokes were accordingly taken out of the smoothing circuit, which had the effect of considerably increasing the H.T. volts. Milliamps rose to 35, and still the valve kept cool, provided only key load was taken. The power was then nearly 21 watts. Test calls were made and a report from Copenhagen, about 620 miles away, reported very strong signals.

The next experiment was to parallel two valves of the same make and test results. This was done, and the milliamps were then 50, the power in the plate circuit being 30 watts. Sundry adjustments were carefully made and the milliamps went up to 60 with a corresponding increase in radiation. The power was then a little over 35 watts, both valves remaining cool. By "cool" it is meant that the plates were just dull red.

Although it is of no practical use to give the radiation obtained, since all results differ between experimenters, it may be of interest to a few to know that the aerial current was in the neighbourhood of 1.6 amps on the shorter waves and a little over two amps on the longer. Whilst carrying out the tests on the higher power, the writer accidently moved the aerial series condenser. The result was instantaneous and disastrous. Every condenser in the circuit seemed to spark over and both valves "blued" violently, milliamps rushing up to the neighbourhood of 150. After that, it was necessary to reduce power considerably and let the valves cool off.

However, the last test was running matters to extremes, and there is no reason why an ordinary receiving valve cannot be used on 10 watts speech (*i.e.*, continuous load), provided sufficient precautions are taken and the circuit is properly designed.

Digitized by Google

Power Loss in Condensers.

By L. Hartshorn, A.R.C.S., B.Sc., D.I.C.

(*Electrical Department, National Physical Laboratory.*)

[R145·5

IN the last twelve months a large number of variable air condensers of more or less new design have been put on the market, and it is obvious to the most casual observer that the general trend of the modifications made in their construction is towards low power loss. The importance of low power factor for condensers to be used in precision measurements has long been realised, but it is probable that its importance in general radio frequency circuits is only fully realised when small condensers suitable for short-wave work come to be used. Two cases in which power losses were the cause of trouble have recently forced themselves on my attention. First, an oscillating circuit was fitted up, but it refused to oscillate so long as a particular condenser was included in it. On substituting another condenser of the same capacity for this particular one, vigorous oscillations occurred. Subsequent tests proved that the condenser which gave the trouble possessed a large power factor. The second case was that of a precision wavemeter, which although satisfactory when new, showed a gradually decreasing sensitivity in the course of a year or so. Here again the trouble proved to be due to high power factor. Thus it may be worth while to inquire into the cause of power loss in condensers and the means whereby it may be avoided or at any rate reduced.

The Function of a Condenser—Power Factor.

In essence, a condenser consists of a portion of insulating material (generally air, mica, oil or paper) provided with two conducting electrodes (the plates of the condenser), by means of which an electrostatic field may be maintained in the insulating medium or dielectric. When the field is set up by applying an electromotive force to the plates of the condenser, the condenser is charged, the dielectric is said to be electrically polarised and possesses a certain amount of electrical energy. When the potential difference between the plates of the condenser is reduced to zero, the polarisation of the dielectric collapses and the condenser gives out its stored energy to the circuit in which it is connected. Thus when the potential difference between the plates of a condenser is alternating, as in an oscillatory circuit, the condenser is continually storing energy and then giving it back to the circuit. At the same time the charges on the plates of the condenser are continually alternating, and thus the condenser is regarded as carrying current. In a perfect condenser the whole of the energy stored by the condenser when it is charged is given back when it is discharged, and thus when the condenser carries alternating current, energy is merely alternately stored and given back by the condenser, and there is no net loss of power as a result of the passage of current through it. The only perfect dielectric is a vacuum, though air and other gases are very nearly perfect. In the case of all solid and liquid dielectrics, some of the energy stored on charge is not given back on discharge, and thus when the condenser carries alternating current a certain amount of energy is lost every time the condenser is charged and discharged, *i.e.*, there is a continual loss of power, which is dissipated as heat in the dielectric. If the condenser is in a wavemeter this loss of power may cause a serious decrease in sensitivity and in nearly all cases it means a loss of efficiency. Power losses also cause a diminution in the sharpness of tuning and in some cases they are associated with changes in the calibration of the condensers. It is therefore important to be able to estimate this loss in the case of any given condenser and to find a property of the condenser which is a measure of its quality in this respect. The power factor is such a quantity. Let V be the voltage (R.M.S.) applied to a condenser, let f be the frequency, and I

Digitized by Google

the current through it. Suppose the power dissipated is W. Then the power factor is defined by

$$\text{Power Factor} = \frac{W}{IV} = \theta \text{ say.}$$

$$\text{Thus Power Loss } W = IV\theta$$

If C is the capacity of the condenser, then I is given approximately by

$$I = VC\,2\pi f$$

$$\text{Thus Power Loss*} = W = V^2C \times 2\pi f\theta$$

This gives the energy loss per second, *i.e.*, in each n cycles. The condenser is charged and discharged $2f$ times per second. Thus the loss of energy in each charge and discharge is $V^2C\pi\theta$.

The energy stored by the condenser on charge is $\frac{1}{2}V_0^2C$ where V_0 is the maximum voltage. Thus the ratio of the energy lost in each complete charge and discharge to the total energy stored is

$$\frac{\text{Energy lost per half cycle}}{\text{Energy stored}} \quad \frac{V^2C\pi\theta}{\frac{1}{2}V_0^2C} = \pi\theta$$

since $$V^2\,(\text{R.M.S.}) = \frac{V_0^2}{2}$$

This ratio is the *decrement* of the condenser per half cycle, and is another measure of the quality of the condenser as regards power loss. Decrement and power factor are in general independent of voltage and current. For a condenser built up of a given dielectric they are also independent of the capacity (that is to say a small condenser with mica as dielectric will have the same power factor as a large one with the same mica as dielectric, provided there is no loss except that in the mica itself). In many cases power factor does not depend very greatly on the frequency (though this is by no means a universal rule).

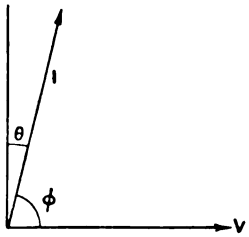

* The power factor is usually represented by *cos* ϕ where ϕ is the angular phase difference between the potential difference and current. If we put $90° - \phi = \theta$, the power factor may also be represented by *sin* θ and in the case of a condenser θ is such a small angle that its sine is approximately equal to the angle itself expressed in radians, so that the power factor is equal to θ.—G.W.O.H.

Consider now a variable air condenser. The dielectric is mainly air, and for all practical purposes this may be regarded as a perfect dielectric. A certain amount of solid insulating material must, however, be used to support one bank of plates, and in this solid dielectric there will always be a certain amount of power loss. For a given condenser under a given applied voltage the power loss will be in general constant, and not dependent on the setting of the condenser. The total power stored will, however, increase as the capacity increases, and thus the decrement and power factor will increase as the capacity becomes smaller. It is on this account that considerations of power loss become more important with very small condensers.

The Causes of Power Loss.

Power may be dissipated in a condenser carrying current in many ways. For example, when a potential difference is applied to the plates of any actual condenser, there is always a very small leakage current in addition to the true condenser current. In very poor condensers this may be detected by an ordinary direct current insulation test. As an approximation, leakage currents such as are detectable in this way may be taken as obeying Ohm's Law, and thus the power dissipated owing to a conductance G is V^2G, where V is the applied voltage. This is the energy lost per second. Evidently the energy loss per cycle is V^2G/f, where f is the frequency, and the higher the frequency the smaller is the importance of this loss, since the ratio of energy dissipated to energy stored becomes smaller. Thus power loss due to mere leakage such as is detected by ordinary D.C. tests is seldom of importance in radio circuits. Nevertheless it is important to bear it in mind and to see that leakage is reduced to a minimum. It is necessary to emphasise here that the leakage under consideration is only that which can be detected by D.C. tests (by a megger, say). It will be shown later that leakage of another type may exist. This is considered in a separate section. Taking the case of air condensers since these are the most important, leakage is generally due to dust between the plates. If the spacing of the plates is very small or uneven, particles of dust are apt to form conducting bridges between them

Digitized by Google

at different points. Conducting fibres from paper and cardboard packing are often found to be bridging the plates, and it is often quite difficult to remove them. The momentary application of a high voltage will sometimes burn them out and greatly improve the insulation of the condenser. This effect of dust is clearly shown by the following example. Table I gives the results of measurements made on a small variable air condenser.

TABLE I.

Condenser Reading. Degrees.	Capacity. $\mu\mu$F.	Power Factor. θ
0	28	0.0065
20	236	0.0014
40	512	0.0009
60	806	0.0008
80	1 082	0.0012
100	1 305	0.0007

Here the power loss was mainly in the ebonite washers insulating the fixed bank of plates, and thus, generally speaking, the power factor decreases as the capacity increases. At the setting 80, there was, however, a sudden increase in power factor. Examination of the condenser showed that the plates were not flat and that they were dusty. At the setting 80, two of the plates approached each other so closely at one point that it could be seen that dust bridged them. It is evident from the results given that the presence of this dust nearly doubled the power factor at that particular setting.

Under certain circumstances the air dielectric of the condenser may become conducting, *e.g.*, at high voltages ionisation may be caused, especially at the sharp edges of the plates and this will cause a dissipation of power owing to the conductance of the ionised air. In such a case, both the power stored and the power dissipated would increase as the capacity increased, and thus the power factor would probably not decrease as the capacity increased.

At high voltages, or in condensers with very narrow air gaps, a certain amount of power may also be dissipated by mechanical vibrations of the plates. Owing to the electrostatic field there is an attractive force between the plates of a charged condenser. The alternations of this force as the electrostatic field alternates, may cause the plates to vibrate like a telephone diaphragm and thus a certain amount of energy is dissipated in the form of sound waves. At audio frequencies the "singing" of the plates of the condenser is easily heard if the voltage applied to the plates is of the order of 100. The loss of power due to this cause is not usually of any importance in practice, except when one attempts to use condensers of very small air gap for precision measurements, but the existence of this loss, and also that due to dust particles, are sufficiently important to make it essential to have a large air gap (say 2mm. or 3mm. at least) in condensers to be used as standards of power factor.

It is important to remember that the power dissipated in any actual condenser is not entirely dissipated in the dielectric. Current must flow not only through the dielectric, but also through the plates, and through any leads used to connect the terminals to the plates. Thus unless the resistance of these is negligibly small they will add to the power factor of the condenser. It is easy to see that this power loss becomes more important as the frequency increases. For let r be the resistance of the connection between plates and terminals. Let I be the current through the condenser, V the voltage between its terminals and f the frequency. Then

Power dissipated in resistance $r = I^2r$

$$\therefore \text{Power Factor} = \frac{I^2r}{IV} = \frac{Ir}{V} = \frac{2\pi fCVr}{V} = 2\pi fCr,$$

C being the capacity of the condenser. Thus a power factor due to this cause increases with the capacity reading and with the frequency.

Dielectric Hysteresis.

The sources of power loss so far considered are all of a comparatively simple nature. The laws governing the actions concerned are fairly well known and it is not difficult to reduce such power losses practically to zero by careful construction of the condenser. There always remains, however, a certain loss of power in the solid insulating material used, and this is by no means well understood. It is much greater with alternating current than the leakage resistance as measured with direct current would lead us

Digitized by Google

to expect. It increases with increase of frequency, and is commonly referred to as dielectric hysteresis, apparently in the belief that it is connected with dielectric polarisation in much the same way that magnetic hysteresis is connected with magnetic polarisation. The general similarity between the laws of magnetic and dielectric actions certainly makes this seem plausible.

The phenomena of magnetic hysteresis are well known. When a magnetic material is taken round a cycle of magnetisation, the magnetic polarisation lags behind the magnetising force, probably owing to the existence of special molecular forces. As a consequence of this a certain amount of energy is lost in every complete cycle of magnetisation, the amount of this energy per cycle being constant for a given quantity of a given material subject to the same degree of magnetisation, and not dependent on the time taken to complete the cycle, *i.e.*, the frequency. Thus, when the magnetising force becomes zero, the magnetisation is not zero and we have the phenomenon of permanent magnetism.

If by the term dielectric hysteresis we understand exactly similar actions in connection with the electric polarisation of insulating materials, then the general trend of modern research on dielectrics suggests very strongly that dielectric hysteresis does not exist. It certainly will not account for the power dissipated by ordinary imperfect condensers.

If the power loss in a given condenser were due to dielectric hysteresis, then it is easy to see that the power factor would be independent of the frequency. For a given voltage the power lost per cycle would be constant, the power stored per cycle would also be constant, and thus the decrement and power factor would be constant. In practice this is not found to be the case, except over a limited range of frequency. Bairsto* found enormous changes of power factor with frequency.

Another important fact is that there appears to be no electrical equivalent of permanent magnetism, which is a consequence of magnetic hysteresis. If the electric force acting on a dielectric is reduced to zero, the electric polarisation also falls to zero eventually, *i.e.*, if a condenser is short-circuited it always loses all its charge, if sufficient time is allowed, whereas a magnet appears to be able to retain its magnetic polarisation indefinitely even when the applied magnetic force is zero.

In short the existence of dielectric hysteresis in the strict sense of the term has never been proved. The only evidence for it is the fact that the power factor of a condenser is sometimes constant over a considerable range of frequency. If, however, the range of frequency is made as large as possible, changes in power factor are always observed. Constancy of power factor over a limited range of frequency is in itself insufficient evidence since this may be due to a number of causes.

Dielectric Viscosity—Absorption.

Realising that the term dielectric hysteresis was insufficient to account for power losses in insulating materials, several workers have made use of the term dielectric viscosity. The idea is that the polarisation of a dielectric is resisted by forces which increase when the rate of polarisation is increased, *i.e.*, they obey laws similar to those which oppose the motion of bodies in a viscous fluid. Work is expended in overcoming these forces and thus arises the power loss. The greater the frequency the greater the loss. Bairsto supposed that the losses due to this cause were proportional to the square of the frequency, *i.e.*, the power loss per cycle and therefore the power factor were proportional to the frequency, though this law does not appear to possess any considerable theoretical or practical foundation, being merely a tentative assumption. On account of these viscous forces the electric polarisation may be regarded as lagging behind the electric force when alternating voltage is applied to a dielectric, and this may be regarded as dielectric hysteresis using the term in a generalised sense.

This dielectric viscosity is really another name for the older term dielectric absorption. When a constant voltage is applied to a condenser there is a sudden rush of current into it (the "instantaneous charge"). This is followed by a current which may be fairly large at first, but which rapidly decreases until finally there is only the constant "leakage current."

* Bairsto. *Proc. Roy. Soc.* Vol. 96, p. 363, 1920.

Digitized by Google

We are not here considering the exponential law of charge of a condenser in a circuit of definite resistance, which merely shows how the voltage across the condenser terminals increases. We are considering the case of a constant voltage instantaneously applied to the condenser terminals. If now the condenser is short-circuited, through a galvanometer say, there is first a sudden rush of current in the opposite direction to the charging current. This is the "instantaneous discharge." It does not immediately decrease to zero, but we have a current flowing out of the condenser perhaps for hours or even weeks. The charge carried by this current is regarded as having been "absorbed" by the dielectric during the charge. This absorption current is large at first, but rapidly becomes smaller as time goes on, eventually becoming zero and leaving the condenser completely discharged. These absorption currents occur not only at charge and discharge but whenever the voltage applied to a condenser is changed in any way and in all cases the current is greatest just after the change has been made. It rapidly decreases with time. When the condenser is subject to alternating voltage, this absorption current must be flowing the whole time and the higher the frequency, *i.e.*, the more rapid the changes in voltage, the larger is this current. Further it is not exactly in quadrature with the applied voltage, as the "instantaneous charging current" is, since the current due to any increment of voltage persists after that increment is completed. The result is that the current through the condenser possesses a component (the absorption component) which varies with the frequency, increasing with increasing frequency, and which is not exactly in quadrature with the applied voltage. This means that there is a certain loss of power, and also that the capacity of the condenser varies slightly with the frequency. Current in a dielectric is regarded as rate of change of polarisation. Thus we may explain the above facts by saying that the polarisation of the dielectric possesses an absorption component, which lags behind the applied electric force. The effect is also exactly the same as that which follows from the idea that the polarisation is opposed by a "viscous" force. The resultant polarisation lags behind the applied force, that is to say, we have dielectric hysteresis in the general sense of the term. The experimental laws governing this absorption current and the power loss due to "dielectric viscosity," or "after effect" as it is sometimes called, have been investigated in some detail and in several cases it has been proved that the power losses in dielectrics are entirely due to this cause.

The Fundamental Nature of the Actions.

We have shown that "dielectric power loss," "dielectric hysteresis," "dielectric viscosity" and "absorption" are probably merely different terms for the same fundamental phenomenon. The question now arises: What is the true nature of the

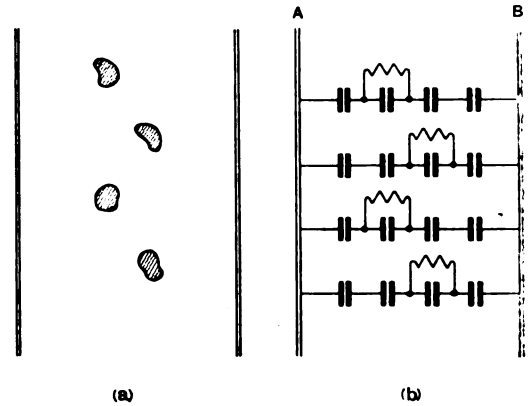

Fig. 1.

phenomenon? A completely satisfactory answer to the question has not yet been given, though a number of possible explanations have been proposed.

Maxwell showed that if we may regard a dielectric as being built up of a number of components with different dielectric constants and resistivities, then the phenomena can be accounted for at least qualitatively. Without going into the mathematics of the question, the actions may be described as follows: Let Fig. 1 (*a*) represent a slab of dielectric. Suppose it is built up of several components, one (unshaded) may be a perfect insulator, the others (shaded) may possess quite considerable leakage conductances. The whole conglomeration may be represented by a system of small condensers and resistances as shown in Fig. 1 (*b*). Consider now the properties of this system :—

1. In the system as drawn in Fig. 1 (*b*) the "insulation resistance" is infinite since

Digitized by Google

the condensers not shunted are assumed to be perfect, and there is no complete conducting path between the electrodes *A* and *B*.

2. If a constant voltage is suddenly applied to *A* and *B*, then in the first instant, before any current has time to flow in the resistances, the whole system takes an "instantaneous charge" depending only on the component capacities. Each component condenser takes a certain change, the magnitude of which depends on its capacity, and thus there is a definite potential difference across each of these condensers. As a consequence of this P.D. currents begin to flow in the resistances, and as the currents reduce the P.D. producing them, they rapidly decrease. Thus these currents form the "absorption current." They have the effect of increasing the charge on the more perfect condensers. The whole system after a time acquires a charge larger than the instantaneous charge. Hence the apparent dielectric viscosity is explained.

3. If now alternating current is sent through the system, some of this current will pass through the resistances, thereby dissipating power. For a given voltage the amount of current passing through the resistance will depend to a great extent on the frequency and thus we have a power loss, varying with the frequency although the "D.C. leakage current" is zero in the case considered.

Thus according to Maxwell's theory, "dielectric hysteresis loss" is essentially of the same nature as the power dissipated in any conductor. If there were no other source of power loss, then in a perfectly homogeneous insulating material there should be no power loss other than that calculable from D.C. leakage experiments.

A totally different theory has been advanced by von Schweidler.* The electron theory explains the instantaneous charge taken by a dielectric as the displacement of electrons within the molecules of the material, these electrons being bound by elastic forces to the nuclei of the molecule, and thus being capable of vibratory motion of definite frequency about their equilibrium positions. The motion of these electrons is controlled solely by the applied force and these elastic forces; there is no frictional force and thus no power is dissipated by the motion. A perfect dielectric contains only electrons of this class. An imperfect dielectric according to von Schweidler possesses in addition certain electrons or ions which are acted on by frictional forces also, so that if they are displaced from their equilibrium position and then released they do not vibrate, but slowly return to that position. These are the cause of the power loss and absorption phenomena. Some of these electrons (or ions) move extremely slowly, and others relatively quickly under the influence of a given applied force. Those which are capable of very rapid motion very largely determine the power losses at high frequencies.

These two theories are obviously sufficiently wide to cover almost any observed power loss measurements, but the available experimental evidence is quite insufficient to determine to what extent each applies in practice. What we know may be summarised thus:—

All solid insulating materials possess a power-factor which is greater than zero. This power-factor may either increase or decrease with frequency; but over a limited range of frequency it is often constant. This power-factor is in many cases very intimately connected with absorption phenomena. In composite insulating materials such phenomena are certainly due in part to the heterogeneous structure of the material.

Surface Leakage.

In variable air condensers the solid insulating material used is always in the form of pieces of small cross section. The electrical behaviour of such pieces is usually very largely influenced by surface leakage. The nature of this is probably somewhat as follows: The surface of a solid can seldom be regarded as chemically clean. It is nearly always covered with a film of "dirt" of some kind. This may consist of more or less pure water which condenses from the atmosphere, or the material itself may undergo chemical changes under the influence of sunlight, air and moisture. Ebonite is a well-known example of this. The sulphur it contains tends to oxidise and form sulphuric acid at the surface. This surface "dirt,"

* von Schweidler. *Ann der Physik.* Vol. 24, p. 752, 1907.

Digitized by Google

however it is formed, is not a good insulator. It may decrease the insulation resistance of the condenser very seriously. The effect on the direct current leakage resistance which has already been considered may however be very small compared with that on the power factor with alternating current. For this "surface leakage" may produce all the phenomena of dielectric viscosity, etc. The moisture which condenses on the surface of the insulator does not spread in a layer of uniform thickness over the whole surface. It tends to collect in small drops which are not in contact with each other. These drops on the surface may be represented by Fig. 1(a), and the system may be represented by the capacities and resistances in Fig. 1(b), and may give rise to "hysteresis losses" as explained above. The water droplets may behave merely as conducting particles connected together by capacities. In this case it is evident that the power dissipated in these conducting particles will be greater the higher the frequency, since the total current flowing is determined by the small capacities and increases with the frequency, and thus the power loss in each drop, which is proportional to the square of the current flowing through it, will increase rapidly with the frequency.

This loss due to surface leakage is particularly important in the case of ebonite exposed to the action of light, and in that of glass and quartz in moist atmospheres. Amber and paraffin wax do not appear to show the effect to any serious extent.

Certain small condensers with quartz insulation used by the writer appeared to show these effects to an enormous extent. It was one day noticed that the value of the capacity was 11$\mu\mu$F higher than it should have been and that the power factor (at telephonic frequency) was 6 per cent. A few days later the capacity was found to be 25$\mu\mu$F higher than the nominal value, and the power factor was 20 per cent. at telephonic frequency. The nominal capacity was 50$\mu\mu$F. These measurements were made at telephonic frequency but it was perfectly obvious that the condensers were useless for work at any frequency and this in spite of the fact that fused quartz was chosen as the best possible insulator. The results were ascribed to surface contamination. The quartz was taken out and thoroughly cleaned with acid and then washed with distilled water. It was then made red hot in a blowpipe flame for at least five minutes and dropped into paraffin wax. The excess of wax was allowed to drain off and the quartz then carefully replaced in the condenser without touching it with the fingers. After this treatment the capacity had returned to its normal value. The power factor was about 0.0001 at telephonic frequency and was too small to be measured at radio frequency. It is not often that "absorption" effects so large as this are observed, but it is obvious that the insulation of very small condensers needs careful attention.

Examples of Poor Power Factors.

Most of the measurements mentioned here were made at telephonic frequency. This is because such measurements are more conveniently and accurately made at telephonic than at radio frequencies. As a rule the power factor of a condenser is of the same order at telephonic and at radio frequencies, and it is the order of the quantity rather than its absolute value which usually matters.

A certain small variable air condenser (300$\mu\mu$F) when included in an oscillating circuit prevented it from oscillating, although other condensers permitted oscillations. This is the condenser referred to at the beginning of this article. Power factor measurements on the poor condenser gave the following results :—

TABLE II.

Scale Reading. Degree.	Capacity $\mu\mu$F.	Power Factor θ	Frequency f.
0	33	0.018	800
86	163	0.0036	—
180	292	0.0021	—

Here the power factor is practically inversely proportional to the capacity reading, which means that the total power loss (which is proportional to the product $C\theta$) is independent of the condenser setting. Thus the power loss is entirely in the solid insulation —probably defective ebonite in this case. This example illustrates the fact that if the power factor of an air condenser is greater than 0.001 at telephonic frequency its performance cannot be regarded as satisfactory.

Digitized by Google

Some Points in Design.

Provided the air gap of a condenser is not too small, and that there are no high resistances in its plate systems, the whole question in the design of a condenser as far as power losses are concerned, lies in the solid insulation. It is obvious that this must be so arranged that the power losses in it for a given applied voltage are a minimum. It is often stated that the conditions for this are as follows :—

1. The smallest possible amount of solid insulation must be used.

2. It must be placed in as weak an electric field as possible.

3. It must be of as high a quality as possible.

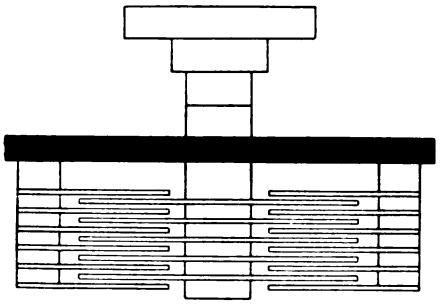

Fig. 2.

A more accurate way of expressing the best conditions is obtained from the following considerations. The power loss in any solid insulating system for a given applied voltage V is given by the equation

$$\text{Loss } W = V^2 C 2\pi f \theta$$

where C is the capacity of the system, θ is its power factor and f is the frequency. Thus for a given voltage and a given frequency the power loss is a minimum when the product $C\theta$ is a minimum. Thus the conditions for minimum power loss are :—

1. The capacity of the solid insulating system must be as small as possible.

2. The power factor of the solid dielectric used must be as small as possible.

Condition 2 determines the material to be used, while 1 determines its size and shape.

As to condition 2, good quality fused quartz appears to be the best solid insulator obtainable, though as we have seen, it must be carefully cleaned before being finally assembled. Ordinary glass is not a very good insulator, though special types are obtainable which possess a very low power factor. Ebonite when free from loading material is good, but is apt to deteriorate rapidly under the influence of sunlight. Amber and amberite are very good at low frequencies, though the latter appears to be not very good at radio frequencies, and is not very highly recommended for condenser work. Mica is good but difficult to make up into a suitable form.

It is usually possible to see, by inspection of the condenser, whether condition 1 has been fulfilled. Figures 2, 3, 4, 5, 6 represent typical cases diagrammatically. In Fig. 2

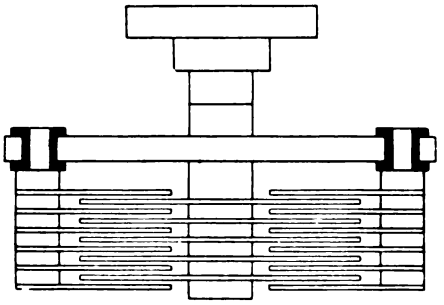

Fig. 3.

the condenser top is of insulating material (say ebonite) and the fixed bank of plates is suspended from it. Sometimes there is another ebonite plate at the bottom. In Fig. 3 the top is of metal and the fixed bank is insulated by means of three washers (two of which are shown). In Fig. 4 the fixed bank is insulated from the case by pillars. In Fig. 5 these are replaced by short lengths of tube. In Fig. 6 horizontal rods of insulating material support the fixed plates.

It is interesting to note that although in Fig. 3 the actual amount of solid insulating material may be much smaller than that in Figs. 4 and 6 say, the power loss is not necessarily less, since if the washers in Fig. 3 are thin, their capacity may be quite high, probably higher than the rods and pillars in Figs. 4 and 6. The capacity of the tubes in Fig. 5 is smaller than that of the pillars in Fig. 4 and hence we should expect Fig. 5 to be the better arrangement, unless surface

Digitized by Google

leakage should happen to be important. In such a case the extra surface of the tubes would be a disadvantage. The arrangement of Fig. 2 is obviously not good. Comparing it with Fig. 6 for example there is obviously more solid material than is necessary. It

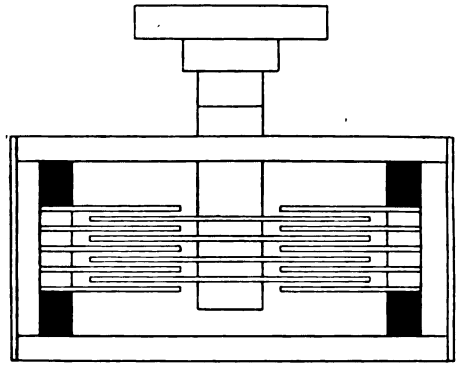

Fig. 4.

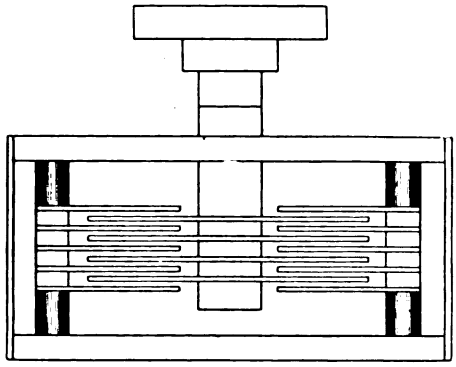

Fig. 5.

is possible however for it to be better than Fig. 3, since the capacity of the insulating top might be lower than that of the washers in Fig. 3. Much would depend on the general design of the plate systems. The arrangements of Figs. 4, 5 and 6 possess the great advantage that the solid insulation is completely enclosed in the condenser and is thus protected from the action of sunlight, moisture, dust, etc. This is especially important in the case of ebonite. Also the condenser is well shielded.

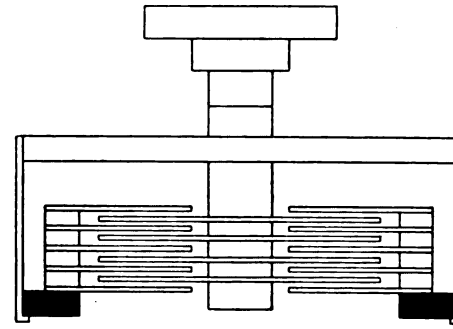

Fig. 6.

The following table illustrates these remarks. It gives the results of power factor measurements made on a series of good quality air condensers of various designs. All the measurements were made at a frequency of about 1 000 cycles.

TABLE III.

Condenser.	Capacity. $\mu\mu$F.	Power Factor.	Insulating System.
A	200	0.0025	Fig. 2 (Ebonite top).
B	200	0.0021	Fig. 2 (Better quality ebonite).
C	200	0.0008	Fig. 2 (As for B but thinner ebonite).
D	200	0.0005	Fig. 3 (Quartz washers).
E	200	0.0001	Fig. 5 (Quartz tubes).

When the readings of these condensers were greater than 200$\mu\mu$F the power factors were correspondingly reduced, the power factor of a well-constructed and well-shielded air condenser being nearly always inversely proportional to the capacity reading.

Digitized by Google

The Directional Recording of Atmospherics.

Paper read by Mr. R. A. WATSON WATT, B.Sc., before the Wireless Section, I.E.E., on 3rd March, 1926.

[R114, R125

Abstract.

THE paper is communicated by permission of the Radio Research Board, and describes a simple pen-writing instrument for the continuous-recording of the apparent direction of arrival of atmospherics, citing typical samples of the data obtainable from such recorders.

This recorder, as finally developed, is then described. The general arrangements are shown in Fig. 1.*

A teak framing *A* supports a frame antenna *S*, belt driven by a turret clock *C* and carrying a recording-drum on which is inscribed the trace of the oscillograph pen actuated by the output of the multi-stage

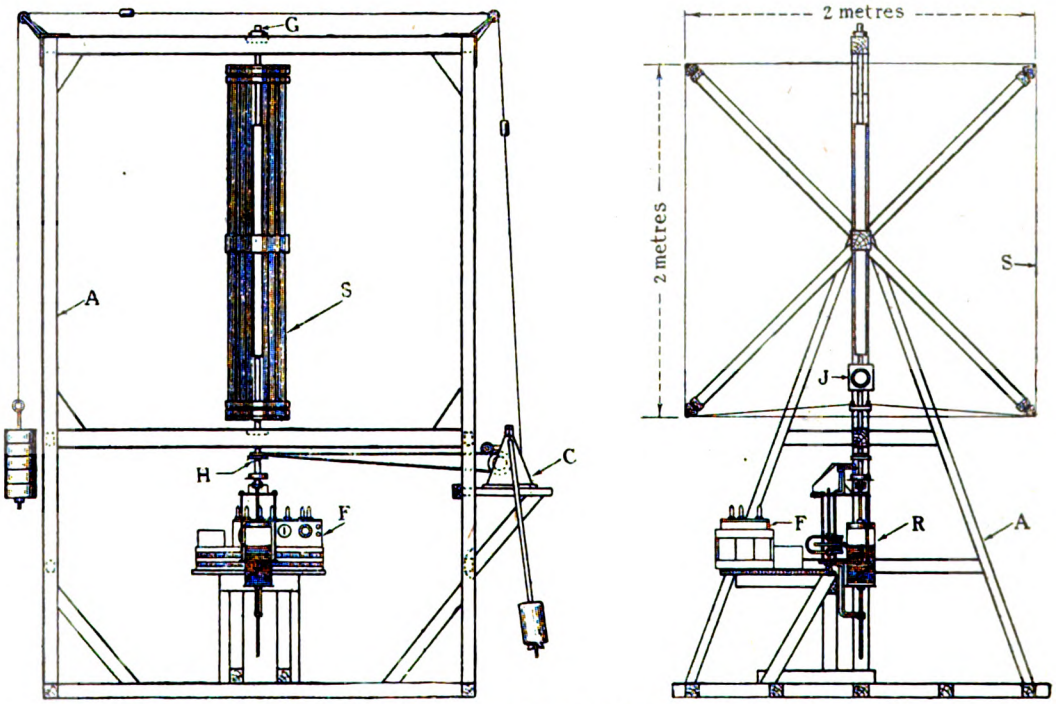

Fig. 1. *Showing general arrangement of the automatic recorder.*

The work was initiated by the Meteorological Office in 1915, and subsequently developed into a fundamental inquiry into the origin and nature of atmospherics, under the auspices of the Radio Research Board. Observations were made aurally first by means of the standard Bellini-Tosi goniometer and later with a frame aerial, with a view to the ultimate development of a simple and easily operated directional recorder working throughout the 24 hours.

amplifier *F*, connected to the frame aerial. The frame is tuned to 20,000m. by the tuning condenser *J*, connection to the amplifier being brought *via* mercury slip rings. Detailed constructional diagrams (not reproduced here) are also given of the Recorder, the Abraham-Bloch oscillograph and the girder-syphon pen used in conjunction with it.

* The author's original figure numbers are adhered to throughout this abstract.

Digitized by Google

The whole apparatus with framing and clock drive is self-contained and can be housed in a hut measuring 3.75 metres square and 4.5 metres high. The frame aerial is 2 metres square and 0.4 metre deep, and is wound on a spider of Paxolin tube. Bare aluminium wire is used, maintained in locating grooves in Paxolin rods carried on each corner member. Sag and thermal expansion are taken up by heavy volute springs in compression in the corner members.

instrument, designed by Abraham & Bloch. A permanent magnet has four laminated radial poles, each carrying a coil, the coils being so connected that the passage of a current rotates the resultant magnetic field to a new direction. A solid soft iron armature follows this rotational displacement, producing torsion of a steel wire control spring. A tongue on the armature shaft carries a pen girder in aluminium, while the girder carries a syphon pen of fine silver tube.

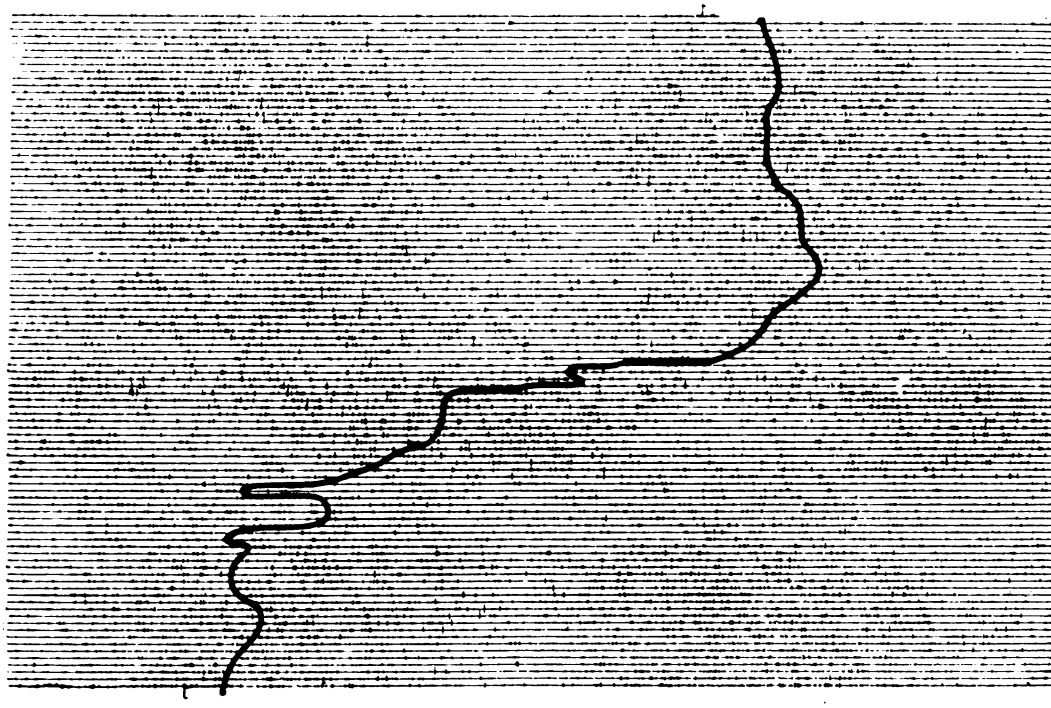

Fig. 7. *Example of record obtained.*

The amplifier is provided with five stages of resistance capacity coupling followed by detector and two L.F. stages. Three of the H.F. stages are normally used for recording atmospherics. The anode resistances of 100,000 ohms are wound from 0.04mm. diameter Constantan wire, on slotted ebonite formers, the direction of winding being reversed in alternate slots to reduce the total inductance. Dull emitter triodes (1.8v. filament) are used, a DE6 in the output stage, and DER's elsewhere. Accumulators are used throughout for L.T. and H.T. voltages. The oscillograph in the anode circuit of the output valve is a tetrapolar moving-iron

The drum is rotated along with the frame aerial, and carries a chart on which the free end of the syphon pen writes a helical trace. On removal from the drum the trace is resolved into 96 approximately horizontal lines each representing one revolution, or 360° in angle and 15 minutes in time at the normal speed of rotation, *i.e.*, 24 hours per chart.

The arrival of an atmospheric giving sufficient voltage in the amplifier output is marked by a vertical excursion of the pen, transverse to the helical base, the chart on removal having the appearance shown in Fig. 7.

In discussing the defects and advantages of the system, the author indicates the defects

Digitized by Google

to be (1) The instrument is non-discriminating, in that it deals with the average direction of the whole distribution of atmospherics; (2) It is only quantitative within somewhat narrow limits, the lower limit being the comparative insensitivity imposed by the use of a pen-writing oscillograph, the upper limit by saturation, etc.; (3) The amplitude depends on other factors than peak field strength; (4) The record becomes too sparse for interpretation if the total disturbance falls to a low value; (5) It has the normal ambiguity of 180°. Against these it has the advantages of giving fair sampling under relatively invariant conditions throughout the 24 hours; the trace is available for re-examination in case of doubt or fresh line of investigation; it is easily maintained and reliable in operation, and enables data to be collected at widely scattered stations without the provision of specially trained and skilled observers.

For study of the direction of arrival, the charts are examined line by line and the most probable maximum determined by the location of two maxima 180° apart, with minima approximately midway between them. The points so found are joined by a line, as shown in Fig. 7. It is frequently possible to trace double distributions, and separate "grinder" and "click" maxima.

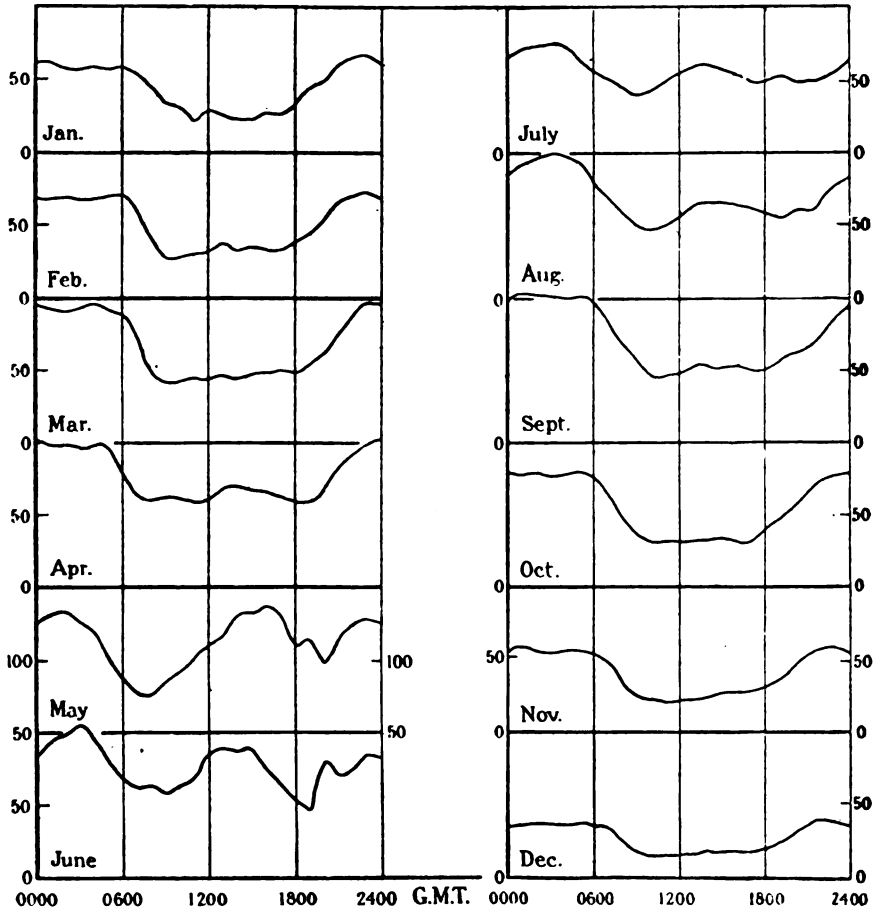

Fig. 9. *A set of chart showing variations.*

The paper then discusses results obtained with the recorder, dealing first with diurnal variation of intensity of disturbance, data

Digitized by Google

for which are available for two and a half years from the first recorder (set up at Aldershot). Results are shown in the curves of Fig. 9, from which it is apparent that there is a principal maximum M_1 in the hours of darkness, a principal minimum N_1 before noon and a secondary minimum in the early evening and subsidiary maximum in the early morning and evening. The times of incidence of these points are plotted in Fig. 10, in which are also shown the mean times of sunrise and sunset, illustrating a close correlation. A table also shows the approximate constancy of the intervals between the times of the various stationary points and the times of the solar phenomena to which they are related.

In considering the diurnal variation of apparent direction of arrival, the ambiguity of 180° renders difficult the selection of a direction which may be accepted as characteristic of a period. It was finally decided that the principal features of the records were most clearly expressed by the following process: From the line to line curve of direction (as drawn in Fig. 7) were read off the hourly values of apparent direction of arrival for hour periods, centred on hours G.M.T. These were entered on a distribution diagram as Fig. 11, for a month of the recorder at Ditton Park, whither the Station was moved from Aldershot in July, 1924. This shows the number of occasions on which, at any hour, a selected azimuth had been most disturbed. Entries were made, as shown, corresponding to both senses of the 180° ambiguity. The "medians" of the blocks (*i.e.*, the azimuths which had as many observations on one side as on the other), were then selected as the most probable value of the predominant hourly directions for the month. A table of directions so obtained for a recorder at Lerwick is shown for the months September,

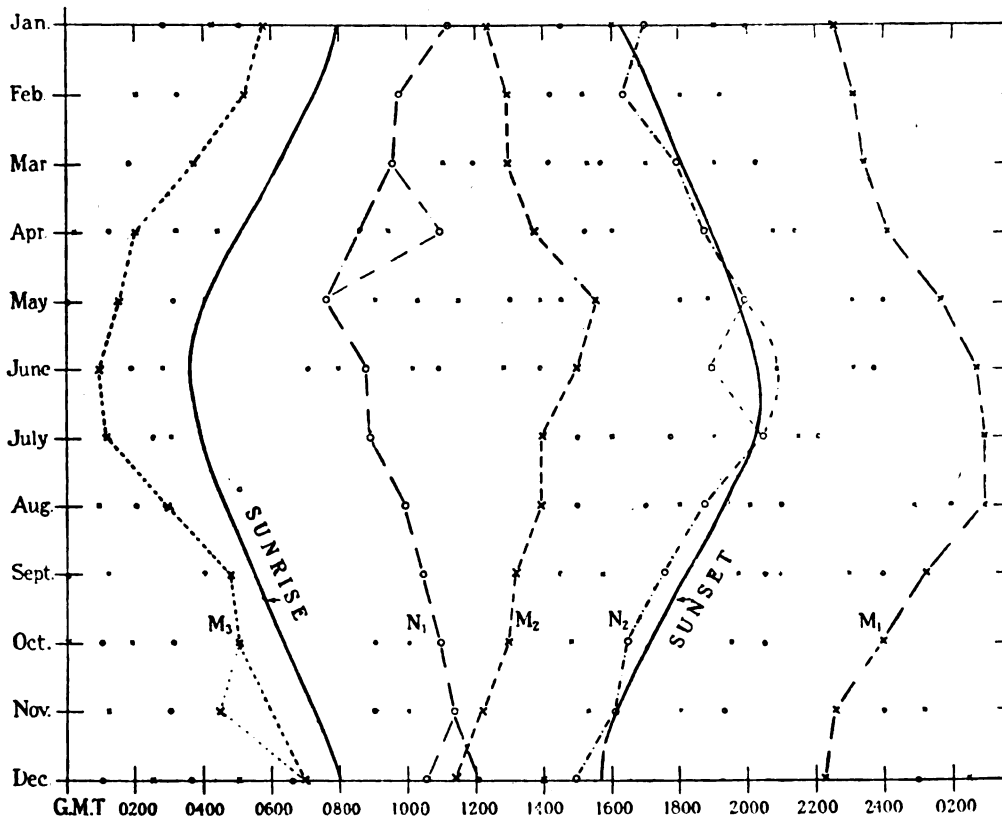

Fig. 10. *Chart showing times of incidence and indicating sunrise and sunset effects.*

Digitized by Google

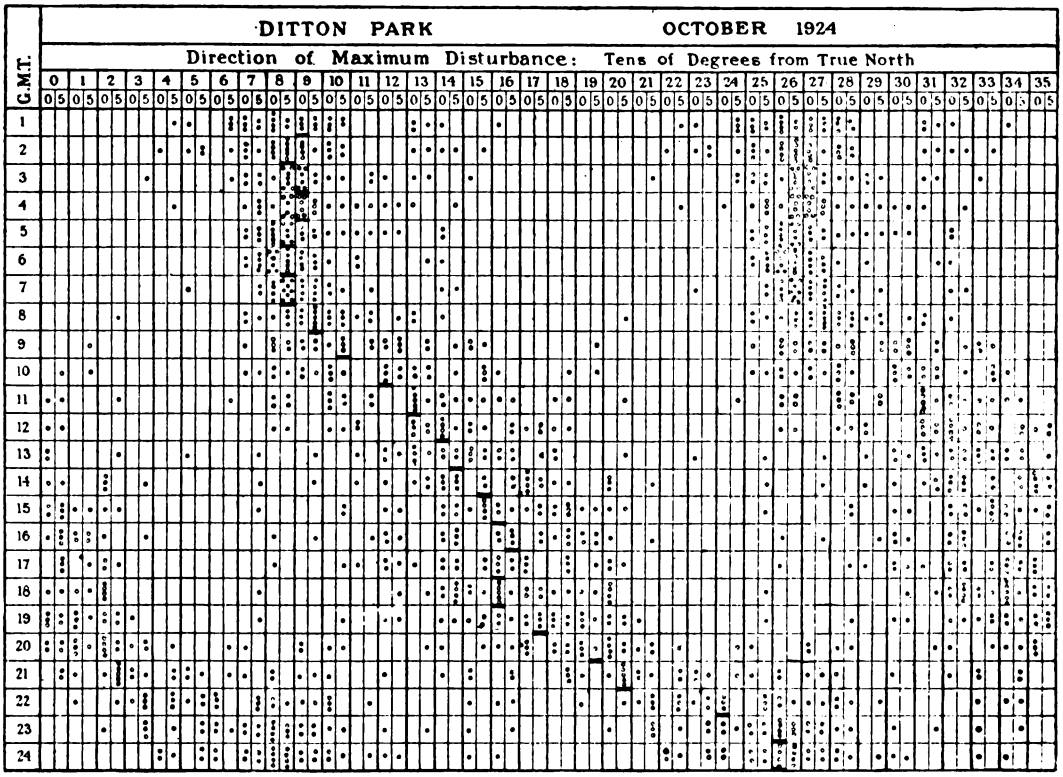

Fig. 11. *Distribution diagram for month of October*, 1924.

1924, to March, 1925. From considerations of this and other data the author suggests the following picture of the variations in the principal stream of atmospherics. Early in the morning atmospherics arriving from the far East, where the sun has already attained some considerable attitude, begin to show themselves. Towards 9 or 10 a.m., G.M.T., they have become the dominant stream arriving from a few degrees south of east about the autumnal equinox and from nearly due south at the winter solstice. In the equinoctial season the cum-solar swing is strongly marked, and in all cases the direction swings through south to a relatively constant S.W. by W. or W.S.W. near midnight. This stream remains the dominant one until 9 a.m., presumably because the American continent produces atmospherics until late in its own evening, while the Pacific Ocean is not an important source. A distribution curve for Bangalore, India, for the month of June is also illustrated showing a cum-solar swing, then in a counter clockwise direction because the sun is then to the north of this station.

Lastly, the author considers the use of a group of those recorders for location of sources of atmospherics. A group of such stations already exists, *i.e.*, at Ditton Park, near Slough (transferred from Aldershot), at Lerwick, Shetland Isles, at Aboukir, Egypt, and at Bangalore, South India. An interesting case of tracing a thunderstorm across Europe by means of the records from Aldershot and Lerwick is quoted. A further example is also quoted from the charts of three recorders. The successive hourly bearings over a period of 12 hours lay almost all along the trough of a shallow depression near Tunis.

A further discussion of such sources is hoped for when the data for the first six months of simultaneous recording have been examined in relation to the available meteorological data.

Digitized by Google

An Instantaneous Direct-Reading Radiogoniometer. [R114, R125

Paper read by Messrs. R. A. WATSON WATT and J. F. HERD, before the Wireless Section, I.E.E., on 3rd March, 1926.

Abstract.

THIS paper is also communicated by permission of the Radio Research Board, and describes a new system of direction finding in which a cathode ray oscillograph is used as the indicating device to permit the direct and instantaneous reading of direction of either signals or atmospherics.

In the introduction the authors consider the disadvantages of the usual types of D.F. apparatus, especially in the investigation of atmospherics (*cf.* previous abstract). It is pointed out that the usual rotating loop method is only suited for wavetrains sustained for several seconds. The inertia of the moving system prevents the taking of bearings on brief wavetrains or wavetrains of apparent azimuth varying at, say, 1° per second. Applied to the study of atmospherics such a system will merely indicate the mean apparent direction of arrival of the predominant streams. There is a high probability that two physically independent streams may be merged into one stream statistically true but physically fictitious.

The next section describes the new arrangement (see Fig. 2* reproduced) used by the authors, particularly in connection with their work on atmospherics at Ditton Park, near Slough.

Two loop aerials, say, A and B, are considered at right angles and crossing at their centres. A vertical wave front, of maximum vertical electric force E, and making an angle ψ with the plane of A, will produce in A and B E.M.F.s proportional to $E \cos \psi$ and $E \sin \psi$ respectively. The E.M.F.s across each loop condenser will also be in this ratio. If these condensers be joined to the deflector systems of a cathode ray oscillograph, the two fields will recombine to produce a resultant field of strength proportional to E and making an angle ψ with the axis of deflection corresponding to the plates *ns*. Thus the fluorescent spot traces on the screen a line of length linearly related to the E.M.F. which would be induced in a loop similar to A with its plane in the ray direction, and making an angle with the reference axis *ns* equal to the angle between the ray direction and the plane of loop A.

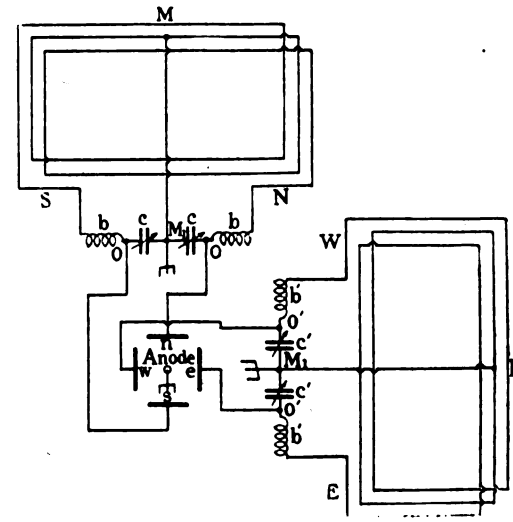

Fig. 2. *General arrangement of cathode-ray direction-finder.*

Generally, for sensitivity comparable to that of commerce, the E.M.F.s will require amplification before application to the deflecting plates of the oscillograph.

Several minor points are to be noted in connection with the oscillograph, one pair of plates (*i.e.*, *ns*) being nearer to the source of the electron beam than the other. The time occupied by an electron in travelling from one pair to the other is 0.0015 microsecond, corresponding to a phase angle of ½° at one

* The authors' original figure numbers are adhered to throughout this abstract.

Digitized by Google

million frequency, so that no error is introduced even at the shortest commercial wavelengths. The difference of position also causes an angular error (on the tube screen) reaching a maximum of $2\frac{1}{4}°$ about the 45° points. This error being independent of amplitude or frequency, a permanent scale correction can be applied, or it can be compensated by a method described later. It is pointed out that this error is not inherent to the system but only incidental to the arrangement of the particular tube used.

For work on atmospherics where there is no possibility of even a rough check on the accuracy of the indications, it is desirable to eliminate even remote possibilities of error. The circuits described for the authors' work are consequently designed to satisfy most completely the requirements of symmetry and the minimum of amplification. To eliminate "antenna effect" the loops of Fig. 2 are divided into halves, the mid-points of the horizontal sides being all connected to earth, along with the anode of the oscillograph. The tuning arrangements are split and arranged symmetrically on either side of the central earth lead. The tuning of each half loop is practically independent of that of the other half.

Special oscillograph tubes have been obtained with the four deflector plates separately terminalled, since complete symmetry is not possible with certain commoned connections in the standard pattern.

For strong signals the oscillograph may be connected directly across the condensers as in Fig. 2. For weaker signals the general scheme of amplification is shown in Fig. 3.

The conditions are especially suitable for voltage amplification by resistance-capacity coupling, and symmetry is maintained by the use of the "push-pull" circuits shown. In the installation described the loops each comprise 5 turns, each 1,200 ft. horizontally and some 125 ft. deep. For atmospheric observations each unit is tuned to 10kc. by the coils and condensers. DE5b triodes are used with wire-wound anode resistances of 10^5 ohms, and 300 anode circuit volts giving voltage magnification of 15 per stage. The first stage is tapped in three, so that overall amplifications of 5, 10, 15, 75, 150 and 225 are obtainable. Accuracies of 1° can be attained on any deflections exceeding half the oscillograph scale. The special features are the precautions for symmetry and the large area of loops. This is part of the general policy of quantitative work on atmospherics, to allow measurements to be made with the minimum of amplification. Loops of turns with an area of 30 sq. metres with one pair of vertical limbs coincident, and in combination with normal amplifiers and the standard pattern of oscillograph have already been shown to be practicable.

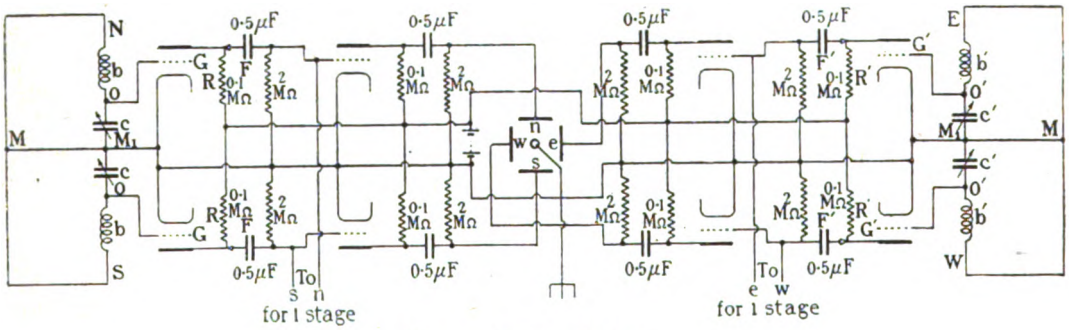

Fig. 3. *Details of circuits.*

Tuning and testing arrangements are described. When the whole system is correctly tuned, a signal causes the spot to trace a straight line which makes with the principal axes, angles which are the angles between the direction of the signal and the planes of the aerials. Slight mistune opens out these lines into an ellipse, due to the misphasing of the two fields applied to the tube. The ellipse is quite wide before its major axis begins to depart sensibly from the correct angle. Tuning may thus be performed directly on the signal, or it may be performed

Digitized by Google

on locally generated oscillations of the desired frequency. The loading inductances of Figs. 2 and 3 are arranged as the secondary windings of a crossed-coil transformer, with a rotable primary excited from a screened calibrated oscillator. The primary may first be coupled to one loop alone and this tuned up, then the other loop tuned independently. Finally both may be tuned to identity as tested by the closing of the ellipse. This instrument also permits testing the amplification on each side. These should be identical but the difference in the position of the deflecting plates can be compensated by a slight increase in the amplification of the pair nearer to the screen. This only involves adjustment of the amplification so that equal inputs to the two systems give identical outputs (on the tube screen) so that the compensation is automatically performed in the general adjustment of amplification.

The third section deals with the properties of the system. The device will provide automatic visual and direct reading, capable of operation by a navigator without requiring a knowledge of morse, and it will deal with signal trains of exceedingly short duration. Another important feature is its behaviour with jamming. It will give correct bearings, simultaneously, even in the case of two or three signals. Three types of pattern may be obtained in practice. If two stations are working independently at hand speed, the screen image will be two bright lines, standing out from a background of faint fluorescence. At high speeds the pattern becomes a parallelogram full of fluorescence, whose sides are respectively parallel to the two bearings. Increase in the number of stations merely increases the complexity of the image, but with three high-speed stations the three bearings are still easily read.

The freedom from inertia effects and discrimination in amplitude will throw light on cases and causes of "bad minima," etc.

In Section IV. typical observations on atmospherics are described. On one occasion quoted simultaneous determinations by this direction finder and of the azimuth of visible lightning showed in a large majority of cases agreement within 5°, which was approximately the limit of estimation of the faint distant flashes. More recent observations are discussed and illustrated showing correlation between observations on atmospherics and reported thunderstorms, verified from meteorological sources. These are plotted on a polar diagram and show very complete agreement between the observed thunderstorms and the apparent azimuth of the arrival of atmospherics.

In the last section the authors discuss the application of the arrangement to the navigational beacon problem. C.W. transmission, modulated m per cent. at a frequency f is suggested, where f need only be a fraction of a cycle per second and m can be made large, while both m and f can be given values which become characteristic of a series of beacons. The transmitters could work simultaneously on the same wavelength. A typical screen image might then consist of two lines intersecting at 55°, one varying once in 3 seconds from full to half length, the other once in 5 seconds from full to quarter the length. The navigator would read the bearings and find in his list the stations characterised by $m=50$ and $f=0.33$, and by $m=75$ and $f=0.2$ respectively.

Slides (not reproduced here) were shown illustrating photographs of the parallelograms obtained from the cathode ray oscillograph in the presence of two, and in some cases of three simultaneous signals.

DISCUSSION.

A joint discussion on both papers then followed.

Admiral-of-the-Fleet Sir Henry Jackson, in opening the discussion, congratulated the authors on their papers, and spoke of the energy and work which had gone to bringing matters to such a high state of perfection.

Dr. G. C. Simpson (Director of the Meteorological Office) referred to the origin of the work on atmospherics under that office, and its transfer to the Radio Board. He considered the work of considerable importance in meteorology, apart from its practical applications in radio-telegraphy.

Prof. J. T. MacGregor Morris referred to the excellent work done by the Radio Board, including that of the authors. He offered some practical suggestions for future trial. For recording, he suggested the use of two frames, rotating at right angles to each other, and both writing close together on the paper with differently coloured inks. Regarding the position of the deflecting plates in the cathode ray tube, he pointed out certain difficulties of arranging them to act at the same part of the beam, but offered an alternative solution which should amount to the same effect. He also suggested the use of two oscillographs with quartz ends for photography, working separately to the loops, subsequently recombining their records.

Digitized by Google

Mr. R. H. Barfield admired the accuracy and detail of the recorder and its application to general use. He inquired whether the author had ever observed a sudden cessation of atmospherics just before sunrise, as had been reported by Capt. Round.

Capt. E. L. Johnston (Airships, Navigation) spoke of the advantage of wireless to navigation. The cathode ray device described more nearly approached the ideal wireless compass than any other device available. It was especially important in aerial navigation.

Mr. M. A. Giblett (Airships, Meteorology) dealt with the application to practice in connection with aircraft meteorology. Such instruments would also be of great use in the airship itself. He reviewed the meteorological effect of "cold fronts" and suggested that the instruments described would be useful for location of such regions dangerous to aerial navigation.

Mr. E. H. Shaughnessy questioned the simultaneous reception of Rugby and Leafield (shown in a slide) if the loops were tuned to 10kc.

Dr. R. L. Smith-Rose dealt with certain points of accuracy of the directional recorder. As regards the cathode ray device, he thought a big step had to be made before it could be put on a ship.

Major G. H. Scott (Airships, Navigation) spoke of the importance of the cathode ray system on airships, and inquired as to progress in the matter of smaller loops with the object of its use on airships.

Mr. R. A. Watson Watt replied briefly to the discussion. Particularly in reply to Mr. Barfield, he stated that although records showed a drop about sunrise he had not encountered the total cessation of atmospherics described. In reply to Mr. Shaughnessy he pointed out that with the slide shown the aerial was tuned to between Rugby and Leafield, which accounted for the reception of both. In reply to Major Scott, there was, he said, every assurance of the possibility of developing loops that could be accommodated in R33.

In moving a vote of thanks to the authors, the Chairman (Major B. Binyon) expressed his belief that the cathode ray device, although still in need of development for general use, was on sound principles.

The Upper Layer.

Discussion at the Royal Society. [R113.4

The meeting of the Royal Society on Thursday, 4th March, was devoted to a discussion on "The Electrical State of the Upper Atmosphere."

THE discussion was opened by Sir Ernest Rutherford, the President of the Society, who broadly reviewed the subject, referring to the effects as observed in the case of wireless waves, and the evidence available from observation of the fall of meteors, etc. He also spoke of the comparatively recent revelation of a very penetrating radiation which increased in intensity with height above the earth.

The discussion was then continued by Prof. S. Chapman, who dealt with the subject, particularly from the view point of auroral manifestations. Prof. C. T. R. Wilson followed with information from the point of view of the thundercloud, etc. Admiral-of-the-Fleet Sir Henry Jackson introduced the subject from the standpoint of radio-telegraphic investigation, referring to recent long distance work on very short wavelengths Prof. E. V. Appleton continued the discussion on this aspect with reference to other recent measurements of down-coming wave, etc. Dr. R. L. Smith-Rose and Mr. R. H. Barfield then contributed a short abstract of D.F. measurements which had just been published as a Royal Society Paper. Prof. W. H. Eccles finally concluded the wireless evidence by a discussion of long distance transmission. The formal discussion was then concluded by Mr. G. M. B. Dobson, who dealt with observations on falling meteors, and the evidence available from this source of a change of atmospheric conditions at about 50 kilometres height.

A general open discussion then followed, opened by Dr. G. C. Simpson, in which the following speakers joined: Prof. F. A. Lindemann, Dr. C. Chree, Sir A. Schuster and Mr. L. B. Turner.

Digitized by Google

An Experimenter's Wireless Laboratory.

By Leonard A. Sayce, M.Sc., Ph.D., A.I.C., and James Taylor, M.Sc., Ph.D., A.Inst.P.

Part III. [R201

Calibration of Moullin Voltmeter.

IN the last section of this series of articles we concluded by describing an attachment for a microammeter whereby it was converted into a Moullin voltmeter. The calibration of the instrument, *i.e.*, the interpretation of its readings in terms of A.C. volts, will now be considered. Two methods of doing this will be described, one for those who are fortunate enough to have a domestic alternating current supply, and the other for those who are dependent upon D.C. mains or batteries.

Alternating Current Method.

It is here assumed that the reader is equipped with an A.C. supply. If any doubt exists upon this point, an "Osglim" neon lamp should be plugged into the nearest lamp-holder. If both electrodes are brightly illuminated the supply is A.C., whilst if the glow is confined to one electrode only, then the supply is direct. The A.C. supply will, in all probability, be either 100 volts or 220 volts. Either voltage is too high for our present purpose, and it is necessary to "step-down," by means of a transformer, to the neighbourhood of 4 volts. Many experimenters have such a transformer for the purpose of accumulator charging, but a "bell transformer" may be purchased for a

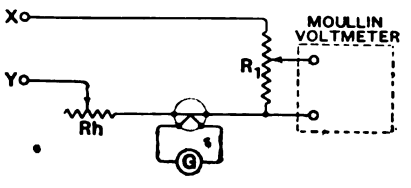

Fig. 32. *Circuit for calibration of Moullin voltmeter.*

few shillings by those who have not. These transformers are intended for working electric bells from A.C. mains, and supply current up to about 1A at an E.M.F. of about 6 volts, R.M.S. They are very useful for a variety of purposes.

The usual method of calibrating a Moullin voltmeter is shown in Fig. 32. The A.C. supply is connected to the terminals X and Y, Rh is a rheostat, R_1 is a straight wire of accurately known resistance having a variable tapping, and G is a galvanometer connected to the main circuit by a "vacuum

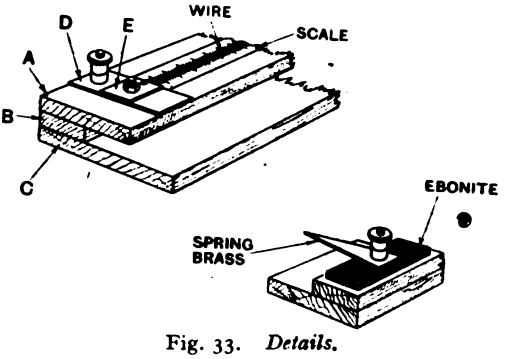

Fig. 33. *Details.*

thermo-junction." By this means G records the current I flowing through R_1, and the value of R_1 being known, the voltage across it is given by the equation: $V = IR$ (see Equation (1*b*), *E.W. & W.E.*, Feb., 1926, p 69). Any known fraction of this voltage may be applied to the Moullin voltmeter by altering the position of the contact on R_1. Unfortunately, we are not in a position to apply the method in the above form because we have not got the necessary vacuum junction. In the absence of the special glass-blowing and pumping facilities which would be necessary in order to make one, we must employ some other means of applying a known alternating voltage across the resistance R_1. In any case, however, we require this resistance: it may take the very convenient form of construction shown in Fig. 33. It consists essentially of a length of resistance wire, exactly a metre long, stretched upon a graduated paper scale of the same length. The two ends of the instrument are identical and constructional details of one of them are shown in the Figure.

Digitized by Google

The three pieces of wood (A, B and C) are all 3 feet 7 inches long, and of the following widths respectively: $A = 2\frac{1}{4}$ inches, $B = 1\frac{1}{2}$ inches, and $C = 3\frac{1}{2}$ inches. These are screwed together in the manner shown. A paper scale, one metre long (obtainable from Messrs. F. E. Becker & Co., Hatton Wall, London, E.C.1, price 5d.) is gummed to the upper surface of A, and two strips of sheet brass D, each provided with a terminal, are let into the wood at the two ends of the scale. The ends of the resistance wire must make contact with these strips. This may be done by direct soldering, but a better plan, which allows the wire to be changed for another of a different gauge, is to provide each of the strips with a 6 B.A. bolt. A square washer of sheet brass E is then held in firm contact with each of the strips by a nut. Matters are so arranged that the two opposite edges of the washers coincide exactly with the ends of the scale. A length of No. 36 S.W.G. bare "Eureka" wire is then stretched over the paper scale and soldered to the brass washers at its two ends.

The construction of the sliding contact is also shown in Fig. 33. The triangular pointer of spring brass is secured to a rectangular piece of ebonite by means of a terminal, and the actual contact with the resistance wire is made by means of a stout "Eureka" wire soldered to the underside of the pointer.

Readers who have found difficulty in obtaining supplies of spring strip brass will be glad to know that it can be obtained from any large printers in a form known as "brass rule." It is used by the compositors for setting up unusually long "lines" which often occur in type, and is a most useful adjunct to the wireless workshop. Previous examples of its use are shown in Figs. 10, 20 and 30 (see February and March issues).

The advantage of the foregoing method of construction lies in the fact that the sliding pointer makes continual contact with the metre wire. This is not the case with the "metre-wire bridge" commonly used.

In page 150 of our last article (*E.W. & W.E.*, March, 1926) it was stated that the Moullin voltmeter there described could be used for voltages not exceeding 4 volts in peak value or 2.8 volts R.M.S. It remains, then, for us to see how to apply an accurately known voltage of, say, 3 volts R.M.S. across the ends of the metre wire. For this purpose we shall use a novel application of the triode, the principle of which is shown in Fig. 34.

If the grid and anode of a triode T are connected together, then for any given voltage across the ends of the filament as shown by the voltmeter V, there is a certain "saturation value" of the anode current registered by the milliammeter M, *i.e.*, a certain value that cannot be exceeded however great be the voltage of the battery B. It is evident, therefore, that the reading of M is, under these circumstances, a measure of the voltage applied across the ends of the metre wire resistance R_1, for if this voltage increases so does the brightness of the valve filament and a greater emission of electrons takes place. The readings of M

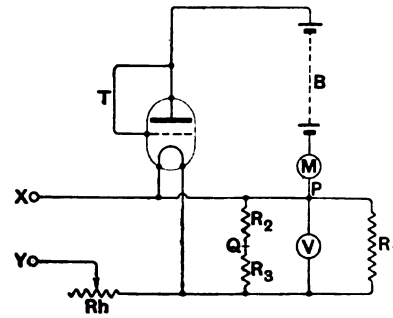

Fig. 34. *Circuit for application of known voltage across resistance wire R_1.*

are, however, not quite independent of the direction of the current through the filament. This is because the anode current itself flows through the filament on its way to the negative end of the H.T. battery. When Y is positive and X is negative, the filament is assisted by the anode current, whilst when X is positive and Y is negative it is opposed by the anode current. Thus in the former case the filament is brighter than in the latter, and a larger reading is shown by M for the same voltage across R_1. The discrepancy between the two cases can, however, be considerably reduced by connecting the lower terminal of the milliammeter M to Q instead of P, where Q is the junction of two 1,000-ohm resistance coils R_2 and R_3 made in the same way as those contained in the 10,000 ohm variable resistance (Fig. 9, p. 72, Feb. issue). By so doing, the reading of the milliammeter is not greatly altered by a reversal in the polarity

Digitized by Google

of X and Y.* That is to say, the reading of M is approximately the same whether we apply a direct voltage to X and Y or an alternating voltage of the same R.M.S. value.

The practical application of the above principle to our present task is performed by means of the circuit shown in Fig. 35. Rh is a filament rheostat capable of rather fine adjustment, T is a "bright-emitting" 4-volt "R" valve, B is an H.T. battery of 50 volts or more, R_2 and R_3 are 1,000 ohm resistance coils, R_4 is the 10,000 ohm variable resistance (Fig. 9) set at its maximum, R_1 is the metre-wire resistance, M is the microammeter shunted 0 to 1.2mA, and *abcdef*

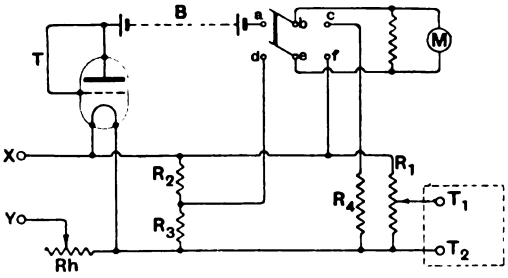

Fig. 35. *Details of calibration method described.*

is the mercury cup switch (see Fig. 7). In the left-hand position of the switch M measures the anode current of T, whilst in its right-hand position it serves as a voltmeter with a range of 0 to 12 volts. (When M is in the right-hand position for greater accuracy *ad* is shorted by the "dimming" resistance of the same value as M.)

The calibration of the Moullin voltmeter involves the following operations:—

1. X and Y are connected to a 4-volt accumulator and, with the switch in its right-hand position, *b* connected to *c* and *e* to *f*, Rh is turned until M indicates exactly 3 volts.

2. The switch is thrown to its left-hand position, *a* to *b* and *d* to *e* connected, and the reading I of the meter is noted.

3. The accumulator is removed from X and Y and replaced by the secondary of a transformer yielding A.C. at about 4 volts.

4. Rh is adjusted until M once more shows the reading I. The voltage across R_1 is now exactly 3 volts R.M.S.

5. The microammeter is removed from the circuit and hooked upon the Moullin attachment (Fig. 30). The L.T. terminals of the latter are connected to a 6-volt accumulator. An H.T. battery also is coupled to its H.T. terminals and adjusted so that the microammeter shows 8μA when the input terminals T_1 and T_2 are shorted. In the instrument shown in Fig. 30, this required exactly 28 volts, but it is usually necessary to adjust the H.T. battery to finer limits than are provided by its tappings, by means of a potentiometer connected across one of its cells (or across an extra cell or two connected in series with it).

6. The input terminals T_1 and T_2 of the Moullin voltmeter are connected respectively to the sliding contact of the metre wire resistance and to its "zero" end.

7. The sliding contact is moved successively to positions "50 mm.," "100 mm.," "150 mm." and so on up to "1,000 mm." Seeing that the total voltage across R_1 is exactly 3 volts R.M.S., these positions correspond respectively to an applied voltage across T_1 and T_2 of 0.15 volt, 0.45 volt and so on up to 3 volts. At each position of the sliding contact, the corresponding reading of the microammeter is taken.

The calibration curve of the Moullin voltmeter is obtained by plotting these readings against the applied voltages. As before, the use of the instrument may be facilitated by the construction of a "supplementary scale," like that shown in Fig. 24. (Fig. 24, by the way, is exactly the size required for the Unipivot instrument recommended.)

Direct Current Method.

The method of calibration given above, although very convenient for those who are furnished with A.C. mains, is of no service at all to those who are dependent upon accumulators or D.C. mains for their supply

* In our experiments the highest values for the reading of M for the D.C. calibration were found to give results in very close agreement with A.C. calibration. It is to be noted, however, that a considerable change of current in the anode circuit indicates a very small comparative change in the filament circuit. In some early experiments, for example, where no compensation was applied and the lower D.C. calibration curve was taken as correct, an error of less than 2 per cent. in the A.C. calibration in the extreme case was observed.

Digitized by Google

of current. Lest it should be assumed that such experimenters have no use for an A.C. voltmeter, it must be explained that, although the instrument has been described under the heading of "A.C. measurements," yet its special utility lies in the measurement of high frequency voltages met with in all wireless practice. In fact, we assume that the calibration obtained with a low frequency alternating voltage is valid for a high frequency voltage also. It is but a step from this to assume that the "characteristic" of a valve as obtained with direct current is equally applicable to voltages which are varying very rapidly. Indeed, if we consider any alternating voltage for an instant of time it is *for that instant* a direct voltage, and will correspond at that instant to a definite anode current as shown by the

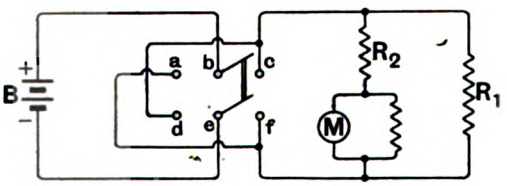

Fig. 36*a*. *Circuit for calibration of Moullin voltmeter by D.C. method.*

D.C. characteristic curve. Seeing, then, that we can "integrate" the values of the alternating voltage during all the innumerable successive instants which go to make up a complete cycle, then it should be possible to obtain the mean value of the anode current during the cycle from the D.C. characteristic of the valve. We shall show, therefore, a method which does not appear to have been used previously for such a purpose, whereby a Moullin voltmeter can, by a method of approximate integration, be calibrated for alternating voltages provided that the calibration for direct voltages has first been made. The calculation is certainly laborious, but it presents no especial difficulty, and the result is of considerable accuracy.

The Moullin voltmeter must first be calibrated for direct voltages in the following manner :—

The circuit of Fig. 36*a* is first assembled. *B* is a 4-volt accumulator, *abcdef* the mercury cup switch (Fig. 7) arranged as a reversing switch, R_1 the "metre-wire" resistance, R_2 the 10,000 ohm resistance (Fig. 9), and *M* the microammeter shunted to read 0 to 1.2mA. R_2 and *M* together constitute a voltmeter reading 0 to 12 volts, and enabling the voltage *V* across R_1 to be measured. The circuit is next modified to that shown in Fig. 36*b*. The L.T. terminals of the Moullin voltmeter are connected to a 6-volt accumulator, and the H.T. battery adjusted as described above so that the microammeter *M* shows 8A when the input terminals T_1 and T_2 are shorted.

Now we require to find the current in the microammeter corresponding to various known voltages between T_1 and T_2. If the contact *X* is at the extreme upper end of R_1 opposite to the 1,000 mm. mark on the scale, then this voltage is that already measured, viz.: *V*. As *X* is moved down-

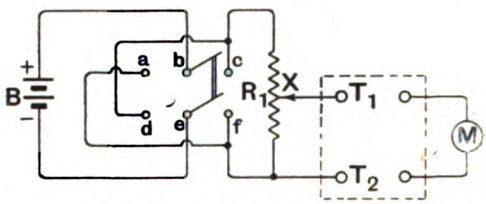

Fig. 36*b*. *Second circuit for D.C. calibration.*

wards, however, the voltage across T_1 and T_2 decreases until when *X* is at the extreme lower end of R_1, opposite the zero mark of the scale, it has become zero. If it is at any intermediate position, say at 400 mm., then the voltage across T_1 and T_2 is $\frac{400}{1,000} \times V$. Commencing with the switch in the left-hand position, *a* to *b* and *d* to *e* connected, and, therefore, T_2 positive to T_1, the voltage across these terminals is varied from zero upwards. The current in *M* being read at each alteration. For voltages over about 2 volts it will be found necessary to shunt the microammeter for a range of 0 to 1.2mA. Finally, the above procedure is repeated with the switch in the right-hand position, *b* to *c* and *e* to *f* connected, *i.e.*, with T_2 negative to T_1.

The data is now complete for plotting the D.C. characteristic of the voltmeter. This should be plotted so that the curve can be read with at least as great an accuracy as were the voltage and anode current.

We have now obtained the ordinary input

Digitized by Google

voltage-anode current characteristic of the biased valve. These two quantities may be assumed to follow the law:—

$$i = \phi(V) \quad .. \quad .. \quad (13)$$

where i is the anode current and V is the voltage applied to the terminals of the meter. But in an alternating voltage of the simple harmonic type which we are considering we have

$$V = E \sin \theta \quad .. \quad .. \quad (14)$$

where V=voltage at any instant,

E=maximum or "peak" voltage, and

θ=phase angle at the instant considered.

From this we find that

$$\bar{i} = \frac{\int_0^{360} \phi(E \sin \theta) \cdot d\theta}{360} \quad .. \quad (15)$$

where $\bar{i}$ is the average anode current shown by the microammeter, and

$$\left[\int_0^{360} \phi(E \sin \theta) \cdot d\theta\right]$$

is the area of the current-phase-angle graph; θ being the phase-angle in degrees.

parts, say 72 parts, each of 5°. Now the average sine between 0° and 5° may be found from tables to be 0.044. The average value of the current in the cycle of voltage from 0° to 5° may, therefore, be found by looking up the current on the D.C. characteristic corresponding to +0.044 volts on the biased grid. Let this value be i_1. This current i_1 has been flowing for an interval of 5° so that the product of the current and the angle during which it flowed is $5i_1$. This is the area of the first 5° of the current-phase angle graph. By a similar process we obtain $5i_2$ between 5° and 10°, where i_1 is the current corresponding to + 0.131 volt—the average sine between 5° and 10°. The total area over the first *quarter* of the cycle is thus

$$5(i_1 + i_2 + i_3 \; . \; . \; . \; . \; . \; . \; i_{18})$$

The second quarter of the cycle is, of course, a repetition of this in the reverse order, so that the total area for the first *half* of the cycle is

$$5[2(8_1 + i_2 + i_3 \; . \; . \; . \; . \; . \; . \; i_{18})]$$

Considering now the third quarter of the

Volts:	1	2	3	4	5	6	7	8	9	10
Av. *sin.*										
0-5	.044	.087	.121	.174	.212	.241	.285	.348	.362	.44
5-10	.131	.26	.392	.522	.653	.784	.914	1.04	1.18	1.31
10-15	.217	.433	.65	.866	1.08	1.3	1.52	1.73	1.95	2.17
15-20	.3	.6	.9	1.2	1.5	1.8	2.1	2.4	2.7	3.0
20-25	.383	.765	1.15	1.53	1.91	2.3	2.68	3.06	3.5	3.83
25-30	.462	.923	1.39	1.85	2.31	2.77	3.23	3.69	4.16	4.62
30-35	.536	1.07	1.61	2.15	2.68	3.22	3.75	4.29	4.83	5.36
35-40	.61	1.22	1.83	2.44	3.05	3.66	4.27	4.88	5.49	6.1
40-45	.675	1.35	2.02	2.8	3.37	4.05	4.72	5.6	6.07	6.75
45-50	.737	1.47	2.21	2.95	3.68	4.42	5.16	5.89	6.63	7.37
50-55	.793	1.59	2.38	3.17	3.96	4.76	5.55	6.34	7.13	7.93
55-60	.843	1.69	2.53	3.37	4.22	5.06	5.90	6.75	7.59	8.43
60-65	.887	1.77	2.66	3.55	4.44	5.32	6.21	7.09	7.98	8.87
65-70	.923	1.85	2.77	3.69	4.62	5.54	6.46	7.39	8.31	9.23
70-75	.953	1.9	2.86	3.81	4.77	5.72	6.67	7.63	8.58	9.53
75-80	.976	1.95	2.93	3.9	4.88	5.86	6.83	7.81	8.78	9.76
80-85	.99	1.98	2.97	3.96	4.95	5.94	6.93	7.92	8.91	9.9
85-90	1.0	2.0	3.0	4.0	5.0	5.99	6.99	7.99	8.99	9.99

Value for .1, .2 volts, etc., are obtained by dividing by 10.

Fig. 37.—*Table of average sines for intervals of five degrees.*

It remains for us to obtain the value of the expression (15). Suppose, for instance, that we wish to find the current shown by the microammeter for an alternating voltage whose peak value is 1 volt. We must split up the voltage cycle into a number of equal

cycle, we repeat the process given above, but to find i_{37}, i_{38}, etc., we observe the current on the D.C. characteristic corresponding to — 0.044 volt, — 0.131 volt, etc. The last quarter of the cycle is, as before, a repetition of the third quarter.

Digitized by Google

Thus for the whole cycle we have a total area of

$$5[2(i_1+i_2+i_3 \ldots i_{18})+2(i_{37}+i_{38}+i_{39} \ldots i_{54})]$$

but the total interval is 360°, so the average current i is found by dividing the above expression by 360; it thus becomes

$$\tfrac{1}{72}[2(i_1+i_2+i_3 \ldots i_{18})+2(i_{37}+i_{38}+i_{39} \ldots i_{54})]$$

This is the reading of the microammeter corresponding to a peak voltage of 1 volt. For a peak voltage of 2 volts the average sines must be multiplied by 2 in order to obtain the values of the voltages on the D.C. characteristic for which the anode currents are to be taken. In the same way, for the voltages of 3, 4, 0.1, etc., the average sines must be multiplied by 3, 4, 0.1, etc., respectively. In this way the A.C. calibration curve of the Moullin voltmeter is built up point by point. This calibration curve is, however, the relationship of "peak" voltage to meter reading, but the R.M.S. of the voltage is, of course, 0.707 × the peak value.

To make the above operation less laborious we have worked out a table of average sines for intervals of 5° (Fig. 37). It may be pointed out that the calculation may be made much shorter and not much less accurate if intervals of 10° or 15° are taken.

ERRATA.

February Issue.

Page 65, 2nd column, line 6, *for* "bushes" *read* "brushes."

Page 68, 2nd column, line 12, *for* "ever" *read* "even."

Page 73, Fig. 11, there should be no connection between *b* and *c*. *P* should be jointed to *b*, but not to *c*. See revised diagram.

Page 76, Appendix 4th line, I_1 = current flowing *through P* when, etc.

Page 76, Appendix 6th line, I_2 = current flowing *through Q* when, etc.

Page 104, 2nd column, last line but 5, *for* μA *read* mA

March Issue.

Page 130, 2nd column, line 4, *insert* "times" *before* "as big as."

An Experimenter's Wireless Laboratory.

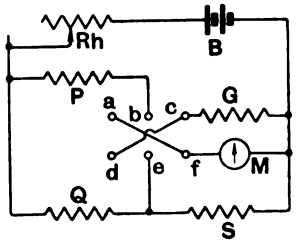

Revised diagram of Fig. 11, page 73, February issue.

N.A.R.M.A.T. WIRELESS EXHIBITION.

An autumn wireless exhibition, which will be open to the trade as a whole, is to be promoted by the National Association of Radio Manufacturers and Traders.

The exhibition will be held in the New Hall, Olympia, from 4th to 18th September next, and it is hoped that sufficient support will be forthcoming to make the display thoroughly representative of the British Radio Industry.

Digitized by Google

Long-Distance Work.

By Hugh N. Ryan (5BV). [R545·009.2

IT was unfortunately not possible to include the customary "Long-distance" article in last month's issue, so this article will cover two months' work instead of the usual one.

As a natural result of last month's non-appearance, reports for this month have been rather scarce, but in any case it is to be feared that very little interesting work has been done during the two months, as far as ordinary DX is concerned, though I believe that the "weather condition" observers are still steadily at work, and obtaining excellent results. As these results must be derived from prolonged periods of observation, it is evident that they can only be published at intervals of several months, if the reports are to be at all interesting, so as I gave a full report of all the most important work in this direction in the February issue, I will not deal with its further developments until more time for observation has elapsed.

The general impression gained from a survey of recent DX work is that the volume of it is falling off very greatly, and that for the most part the better-known and more powerful stations are working much less, while low-powered stations are handling the bulk of the work. This is probably because those of the "hi-pwr" men who were attracted to the work more by the "itch for distance" than by scientific zeal, have given it up now that no DX records remain to be made, while the more scientific among them are now engaged in observation and research work which does not manifest itself so much "on the air." Nevertheless, much work is still to be heard.

2SZ has recently been more than usually busy with other work, and has therefore not been on the air a great deal, but his crystal-controlled transmitter continues to give excellent results.

The doings of 6LJ are wrapped in mystery. His usual report has not turned up, nor has he been heard on the air, but he is said to be deeply immersed in signal-strength curves and weather charts, and some interesting results are expected.

6QB has left short waves for the 200-metre band and uses phone exclusively.

There is plenty to be done on the longer waves, though they seem to be inhabited chiefly by the talk-cum-gramophone people. 6QB has got to Russia and Palestine with very low power on 160 metres, and 6OG (Bristol) is working the United States on 90 metres with only 12 watts.

5HS has worked Australia and Indo-China with 50 watts, though he has difficulty in working Americans. He has also done some very useful low-power work in Europe.

6VP has been one of our most active stations this month. He has altered his aerial system with very good results, and the 1,000 miles which I mentioned as his range last month has now grown to 3,000. He remains one of the few stations one hears with a real D.C. note.

Messrs. Studley, of Harrow, have logged one of the stations in Samoa (NPU) and Panama (PT1). They also head a New Zealander (2BR) who was only using 14 watts input.

5AX has just put up a Hertz aerial, and though his power is still very small his range has increased very greatly.

5QV is getting ready for a change of QRA, but has a temporary rig-up in action, with a Hertz aerial, which is working very well, over most of the world.

6BT has been inactive most of the month, but has worked Malta, while 6JV is working Eastern U.S.A. with 35 watts.

2KK has only been doing receiving work, and has logged a large number of stations, especially South Americans.

2XY recently logged stations in every U.S. district in one night, and his own signals have now been heard in Australia.

6CI is continuing his tests on very low power, his input at present being 0.8 watt, and would welcome reports from stations hearing his signals. His best ranges so far, with this power, have been 215 miles key and 110 miles phone.

A Scottish station has reported for the first time for many months. 6BQ (Glasgow)

Digitized by Google

reports that his portable 10-watt transmitter has been heard in Australia. This must be one of the first Scottish stations to reach the Antipodes, unless the others are too modest to report their successes.

Messrs. O'Dwyer, of Dublin, have stations in most parts of the world in their month's log, including stations in Honolulu and India. One Australian was heard early in the afternoon.

An attempt is being made to form a Saorstat Eireann section of the International Amateur Radio Union. It is certain that such a section is needed, and all Southern Irish amateurs interested are asked to write at once to 115, Anglesea Road, Ballsbridge, Dublin.

The Belgian amateurs have been very active recently, their most interesting achievement being the extra-short-wave work of W2, who has put strong signals into Spain on a wavelength of six metres. As far as I know this is the first long-range work ever done on this wave. S4 has rescued his gear from the flood (mentioned in the last report), and is now working again. He and S2 are both using Hertz aerials, and are both QSO regularly with the U.S.A. Several of the Belgians are doing very well on low powers, E9 having reached South Africa with 20 watts, while G6 has worked Porto Rico on 15 watts and K5 Morocco on half a watt. B2 and D4 are in touch with Brazil, and P2 is, as usual, handling a lot of traffic with U.S.A. Danish 7EC is now living in Belgium, and may soon have a station there.

The Danish amateurs have been doing very useful work in helping a steamship line to equip three of its boats with short wave sets, to communicate with another station on land. The ships ply between Denmark and South America, U.S.A., and Iceland respectively, and have three-letter calls beginning with OY— or OZ—. Reports on the signals from these ships will be welcomed by Danish 7ZM.

Will all those who send me reports please note that I must have them in future by the 6th of each month at the latest, instead of the 10th as hitherto. Reports of low-power DX and reports from foreign stations are especially welcome.

Mathematical Articles.

We have received many letters from our readers suggesting that we should publish articles which would help those whose mathematical training has been limited, to acquire sufficient knowledge of the subject to understand and appreciate, to a greater extent, the mathematical treatment which necessarily enters into so many of our articles. We sympathise very sincerely with those who labour under this disability; it is very disheartening to get interested in an article and then come suddenly on an unintelligible piece of mathematics which makes any further interest impossible.

We are pleased, therefore, to be able to say that we have made arrangements for the immediate commencement of a series of articles which will deal with just those branches of mathematics which are most important to the radio engineer. The subject will be dealt with in as simple and practical a manner as possible, special emphasis being laid throughout upon wireless applications. As in some cases our correspondents have mentioned that it was their inability to follow Mr. Colebrook's articles which caused them specially to regret their lack of mathematics, we are very pleased to be able to say that Mr. Colebrook has undertaken to prepare the series of articles, which we trust will not only enable many of our readers to add to their knowledge of mathematics, but will also enable them to apply more confidently the mathematical knowledge that they already possess to the problems which they meet in their reading and in their experimental work.—Eds.

Digitized by Google

How Far is that Station ?

By H. E. Adshead, B.A. **[R081**

IT is sometimes of interest to know exactly how far away and in what direction a certain station lies. Perhaps one is trying a few directional experiments with a frame aerial, or following an aeroplane conversing with Croydon. Maps do not assist us much because the two places seldom come on the same sheet. When we turn to a Mercator projection of the world—the usual one with parallel lines of longitude—the apparent directions are quite erroneous. Ask a Londoner to indicate the direction of New York, and he might point towards Cornwall, whereas the line passes N.W. more or less through Chester ! One would hardly think from Mercator that the shortest way from San Francisco to the Philippine Islands was all round the coast and down the side of Japan, not " straight across " the Pacific.

To work out the bearing (direction) and distance by spherical trigonometry sounds complicated, but I am attempting to make this quite easy. I have set out a special skeleton (filled in with the figures of a worked example) which reduces it to its simplest form, and nothing more than the ability to look up a few straightforward logarithms is required. Rule half-a-dozen horizontal lines and write out all the words there shown, leaving blanks for your own angles and logs, then about twenty minutes with a book of tables will solve the problem. E. and O.E. ! The most likely pitfall is to forget to carry 6's when dealing with minutes of angle and to carry 10's instead.

It is advisable to make just a rough earth diagram to see what one is about. In order to form a spherical triangle on the earth with the two places, we run their lines of longitude up to the nearest pole, and then we have the triangle shown black, the third side which we calculate being the distance required. The angle at the pole is called *D. long.*, or difference of longitude, and it is obviously equal to this if both places are on the *same* side of Greenwich meridian, and equal to their *sum* if on *opposite* sides. Latitude is measured in degrees from the equator, but it is the other part we want, the degrees from the pole, so we subtract the latitude from 90°, and this is called the *co-latitude*. Should one of the places be below the equator, its distance from the pole would be latitude + 90° instead. Try this with a sketch.

Suppose now I have listened to an aeroplane speaking as far as Abbeville (the pilot says where he is) on one valve. How far is that ? The latitude and longitude of each station is obtained from a good atlas or map. We then work out the initial data so :—

	Long.	Lat.	Co-lat.
Abbeville	1° 50′E	50° 08′N	39° 52′
Author ...	0 26′E	51° 57′N	38° 03′

D. Long. = 1° 24′
½ D. Long. = 0° 42′

I will leave this to the reader as a problem. The distance comes to 120 geographical miles, and bearing 153° 24′. I take instead the American broadcasting station KDKA Pittsburg, and Cambridge, England. The distance comes out in degrees, and we remember that 1° = 60 geographical miles, and 1 geographical mile = 6,087.1 feet. One gets two angles for bearings ; which is which ? I have merely called them *A* and *B* so as to refer to them. In any triangle we can see, though Euclid made us prove it, that the greatest angle is opposite the greatest side, and since KDKA is farther from the pole than Cambridge, therefore 68° 35′ will be the angle opposite it, and the bearing required. The results can be checked by comparing them with the "*Wireless World*" *True Bearing Map of the World*. It should be noted, however, that the scales are given wrongly, and are more nearly 1 in. = 1,040 miles, 1.5cm. = 990km. The earth is shown as a 24 in. circle, and 1 in. = 1,000 miles would make its circumference 900 miles short.

It is intended in my skeleton that all the logs on one line shall refer to the angle at the beginning, and that all the logs belonging to the same angle be filled in while the book is open at that page. When looking up *tan* ½ (*A* + *B*) enter the sine of it under the

Digitized by Google

distance column at the same time. A few readers may be puzzled as to why adding half the sum to half the difference of two quantities, gives the larger one, and subtracting them, the smaller; but it is so, try it with a few examples.

Five-figure logarithms will give an answer accurate enough. Perhaps the best five-figure tables are those of M'Aulay, published by Macmillan. The type setting is good and they are fully complete. For seven-figure logs there is the usual Chambers, but some German tables are better set out.

I suggest the reader should work this problem out again for himself, without referring to my figures.

Mathematical readers may like to see the appropriate formulæ set out according to the usual notation. These are:—

$$\tan \tfrac{1}{2}(A+B) = \cot \tfrac{1}{2}C \,.\, \cos \tfrac{1}{2}(a-b) / \cos \tfrac{1}{2}(a+b)$$

$$\tan \tfrac{1}{2}(A-B) = \cot \tfrac{1}{2}C \,.\, \sin \tfrac{1}{2}(a-b) \sin \tfrac{1}{2}(a+b)$$

$$\tan \tfrac{1}{2}c = \sin \tfrac{1}{2}(A+B) \,.\, \tan \tfrac{1}{2}(a-b) \sin \tfrac{1}{2}(A-B)$$

Some may ask, why not employ secants and cosecants? In the first place many tables do not give them. Secondly, they do not, for angles near 0° and 90°, give accurate results. Test this on the Abbeville example which is rather interesting on this account. It is not necessary to enter into explanations here. The positions of two B.B.C. stations are: Daventry 1°9′W; 52°15′N, London 0°9′W; 51°39′N, the latter being on the roof of Messrs. Selfridge's Store.

DISTANCE APART OF TWO PLACES ON THE EARTH BY LATITUDE AND LONGITUDE.

MODEL SOLUTION.

Example:	Long.	Lat.	Co-lat.
1. CAMBRIDGE	0° 08′E	52° 12′N	37° 48′
2. KDKA	79° 56′W	40° 27′N	49° 33′
D. Long. =	80° 04′		
½ D. Long. =	40° 02′		

DATA.

Co-lat. (2)	49° 33′	½ D. Long.	40° 02′
Co-lat. (1)	37° 48′	½ Diff.	5° 52′
Diff.	11° 45′		
Sum	87° 21′	½ Sum	43° 40′

For ½(A + B).

log cot	10.07567
log cos	9.99772
add	20.07339
log cos	9.85936
subtr. = *log tan* ½(A + B)	10.21403
=	58′ 35′
	58° 35′
	10° 00′
adding	68° 35′ = A
subtra.	48° 35′ = B

For ½(A—B).

log cot	10.07567
log sin	9.00951
	19.08518
log sin	9.83914
	9.24604
= *log tan* ½(A—B) =	10° 00′

For DISTANCE.

log sin ½(A + B)	9.93115
log tan	9.01179
	18.94294
log sin ½(A—B)	9.23967
	9.70327
= *log tan* ½d =	26° 48′
d =	53° 36′
=	3,216 minutes or geographical miles.

$$3{,}216 \times \frac{6087}{5280} = \textbf{3,708 statute miles.}$$

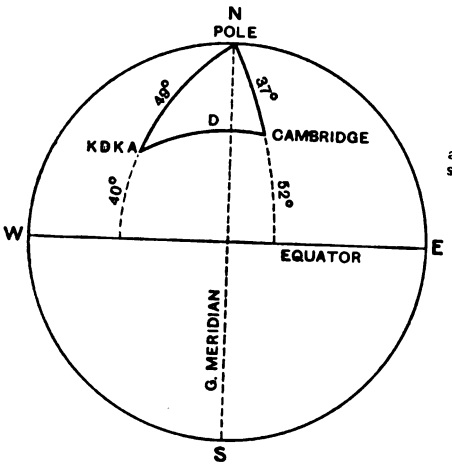

The greatest angle is opposite the greatest side, therefore the bearing of **KDKA is A, 68° 35′ W. of North.**

NOTE.—

1 geo. mile = 6,087.1 ft. (1855.32 m.);

1 stat. mile = 5,280 ft.;

ratio $\frac{6{,}087}{5{,}280}$ = 1.153, *log* 1.153 = 0.06177.

Digitized by Google

From the World's Wireless Journals.

Abstracts of Technical Articles.

R100.—GENERAL PRINCIPLES AND THEORY.

R112.6.—Horizontal Reception.—R. S. Kruse (*Q.S.T.*, Feb., 1926).

An account of work with horizontal aerials, introduced with special reference to experiments by Dr. G. W. Pickard. Pickard has used a Hertzian rod antenna, with the receiving apparatus at its centre, the whole mounted on top of a wooden tower 18 ft. high, the Hertzian rod being mounted so that it can be rotated or swung into any position.

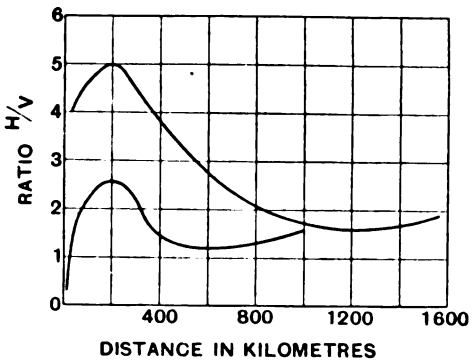

Fig. 1.

Pickard is quoted as stating that wavelengths of the broadcasting band or of greater length are always found to be vertical by day with no measurable trace of horizontal. At night there is a horizontal component amounting to 5 or 10 per cent. of the vertical. With waves of 80, 40 or 20 metres it is found that the greater part of the wave arrives horizontally polarised, the ratios for 80 metres being two-thirds horizontal and one-third vertical, for 40 metres four-fifths horizontal and one-fifth vertical. The results are summed up as follows:

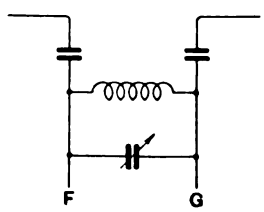

Fig. 2.

The ratio of the horizontal to the vertical electric forces in the wave front depends upon three factors: frequency, distance and time of day. This ratio is not, save in the immediate vicinity of the transmitter, in any way dependent upon the polarisation of the wave at its origin. The curves of Fig. 1 are given as showing results on 80 and 40 metres.

The article also gives a general discussion of the Hertzian di-pole in transmission and reception. Further work on the use of horizontal aerials is described and several typical circuits used are illustrated, that of Fig. 2 being favoured, each of the small condensers being about $5\mu\mu F$.

R113.—Some Studies in Radio Broadcast.—R. Brown, D. K. Martin and R. K. Potter (*Electrician*, 12th Feb., 1926).

An abstract of a Paper read before the Institute of Radio Engineers, dealing with an investigation of transmission made round New York City, and in continuation of previous work by the same writers. It was observed that there were points relatively near New York City where quality distortion was marked at night and in one case detectable in day time. Experiments are described for the investigation of this phenomenon, and it is stated that the carrier and side bands do not fade together as a unit. The carrier may pass through a zero value with still considerable amplitude in the side-band frequencies. Fading is therefore a function of frequency as well as of time. Simple wave interference is the most likely explanation. The effect of frequency differences in fading is then considered theoretically, and curves are given for simultaneous fading on 610 and 610.5kc. 610 and 609.5kc., and 610.5 and 609.5kc. The last shows that maxima and minima of the two frequencies are opposed fairly regularly over the 33 minutes of record shown. Experiments are then described when transmitter frequency was changed in steps over an adjustable range. Results show that within the 2,280 cycle band covered by the data there is approximately one complete cycle of selective fading, the main frequency difference between the successive minima being approximately 2,200 cycles. After considering the shadow effect —*e.g.*, of tall buildings—the paper then describes measurements of fading with spacing. Receivers were spaced 1-16 wavelength apart (*a*) along the line of transmission and (*b*) across the line of transmission. Result curves are shown, the latter revealing closer parallelism than the former. Simultaneous fading results are also given for a vertical aerial and for two loops at right angles to each other in a horizontal plane. These show that a high amplitude of signal may be coming in on both loops while the vertical aerial signal is very small.

Selective fading and its effect on received distortion is then considered theoretically, and it is shown that one side band may fade out completely but that the other will still bring in the signal so long as the carrier is not also lost. The authors conclude that the best form of transmission is single side-band with carrier suppression, and its replacement at the receiver, although the application of this to broadcast transmission and reception would not seem practicable on economic grounds.

Digitized by Google

R113.—NOTES ON WIRELESS MATTERS.—L. B. Turner (*Electrician*, 12th Feb., 1926).

A continuation of the review of progress in 1925. The magneto ionic theory of propagation is reviewed, along with recent contributions to the literature of the subject. Experiment and theory both point to a critical wavelength of 210 metres at which great absorption should occur in the upper atmosphere. At long distances much better ranges should be obtainable with longer or with shorter waves than this critical value. Other work on propagation is referred to, including that of Appleton and Barnett (abstracted in *E.W.& W.E.*, February, 1926) showing definitely that signal rays do arrive from above as well as horizontally. Reference is also made to the extensive data on signal strength measurements given in the Marconi Research Staff's recent I.E.E. paper (abstracted in *E.W.& W.E.*, December, 1925). The transmission formula deduced is compared with the original Austin-Cohen formula. The present state of knowledge about the upper atmosphere in relation to wireless is then summarised.

R114.—LA PRÉVISION DU TEMPS ET LA VARIATION DIURNE DES ATMOSPHERIQUES.—R. Bureau (*Comptes Rendus*, 4th Jan., 1926.)

The writer distinguishes three chief types of diurnal variation of atmospherics :—

(1) A regular variation characterised by a very marked maximum during the night and an equally marked minimum during the day, with a sharp decrease about sunrise and an increase, generally less abrupt, about sunset.

(2) A regular variation characterised by a total absence of atmospherics in the morning, their marked appearance about 11 or 12, with a maximum about 3 p.m., and their disappearance about 9 p.m.

(3) Irregular variation, appearance and disappearance without regard to the time of day or night. These are correlated with meteorological phenomena. The first originate in anticyclones, the second in " pseudo polar fronts," and include the type of atmospheric known as " grinders." The third is produced by disturbances on a cold front (edge of a depression). The first type is more noticeable in winter, the second type is not so prevalent in moderate latitudes (*e.g.*, France) except in summer, and is more prominent in tropical regions.

R134.—THE RECTIFICATION OF SMALL RADIO FREQUENCY POTENTIAL DIFFERENCES BY MEANS OF TRIODE VALVES.—PART IV.—F. M. Colebrook (*E.W. & W.E.*, Feb., 1926).

R149.—LA CONDUCTIBILITÉ DES COLLOIDES METALLIQUES ET SES APPLICATIONS ELECTROCHIMIQUES.—H. André (*Onde Elec.*, Jan., 1926).

An article dealing with colloidal materials, and their use in electrotechnics, especially in wireless. The general properties and history of colloids are first dealt with. Organic colloids have proved unstable, but metallic, especially silver, colloids have proved stable and satisfactory electrically. The conduction through a cell with electrodes dipping into a colloid are considered, and the author draws a parallel between the action and the electronic emission from a thermionic valve. The rectifying action of a colloidal cell is then considered, and various applications illustrated. These include the use of one cell as a simple rectifier for accumulator charging, etc., and the use of two cells with a centre tapped transformer for full wave rectification, and an arrangement of four cells to give full wave rectification without a transformer. The arrangement of a number of colloidal cells in series or in parallel is also discussed. The author then deals with applications to wireless technique, and illustrates a cell for this purpose in which the cathode is somewhat after the form of the electrode of a Wehnelt interrupter. This works as a wireless detector without any auxiliary voltage and with a sensitivity equal to any " contact apparatus." It is also stated that with suitable electrodes and correct concentration of acid, these cells can be used for the generations of high frequency oscillations. By suitable adjustment from a potentiometer the arrangement can also be used to give amplification with rectification of H.F. currents. The author concludes by comparing the cases of thermionic emission and cold (colloidal) emission, and suggests that the development of the colloidal cell may enable it completely or partially to replace thermionic valves for wireless reception.

R200.—MEASUREMENTS AND STANDARDS.

R201.—AN EXPERIMENTER'S WIRELESS LABORATORY.—L. A. Sayce and J. Taylor (*E.W.& W.E.*, Feb., 1926).

R220.—A SIMPLE METHOD OF MEASURING THE CAPACITY AND HIGH FREQUENCY LOSS OF A CONDENSER.—L. A. Sayce (*Journ. Scien. Insts.*, Jan., 1926).

The method employs a triode oscillator A with a " backed off " galvanometer in its anode circuit. Coupled to A is a closed oscillatory circuit B, containing inductance L, condenser C_1 and resistance R. It is known that, as the coupling between B and A is tightened, B commences to be forced into resonance with A over a short range of C_1, during which the galvanometer drops to a minimum. In the method described the coupling used is that at which the " forcing " just commences. The method is then as follows : (1) R being kept at a value R', near to its maximum, the coupling is adjusted to the point where the " forcing " effect just commences, when B is tuned with C_1 at the value C_1'; (2) Cx, an unknown and imperfect condenser, is then joined in parallel with C_1, and the latter reduced in value until an ill-defined null point indicates approximate resonance; (3) R is then reduced to a new value R'' when " forcing " again just commences. (4) C_1 is finally readjusted to a new value C_1'' at which exact resonance is again shown. It is then evident that the total capacity and total losses in B are identical in (1) and (4), so that the capacity of Cx is $C_1'—C_1''$, and its H.F. losses are $R'—R''$. The losses of C_1 should be negligible and R should be of constant inductance and capacity.

R261.—AN APPLICATION OF THE DIODE TO THE MEASUREMENT OF A.C. VOLTAGES.—J. Taylor (*Journ. Scien. Insts.*, Jan., 1926).

A description of a new form of valve-voltmeter,

Digitized by Google

using a three-electrode valve with its anode and grid connected together to form a diode. The arrangement is shown in Fig. 1, where R is of the order of 1 megohm.

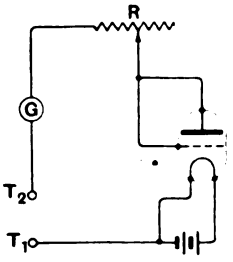

Fig. 1.

The author first considers the case of an ideal valve, *i.e.*, one having unilateral conductivity, following a linear law. It is shown that if an A.C. voltage of *average value* $\bar{V}$ is applied to terminals T_1 and T_2, the *average* current will be half that produced by a D.C. voltage of V. Expressions are then deduced for the same cases with a diode following Langmuir's "three halves power" law, showing that the ratio is still very nearly half. With the conditions quoted and a potential of only 8 volts, the ratio of D.C. to A.C. would be 2.01 instead of 2, the error decreasing with increase of the voltage measured.

For calibration T_1 and T_2 are first short-circuited and a small back voltage introduced to neutralise any small zero-voltage current. A known steady voltage, say 50 volts, is then applied and R adjusted to give, say, 100 galvanometer divisions (2 divisions per volt). If the instrument is then used on A.C. supply the galvanometer will give a deflection of one division per volt (average volts). Since R.M.S. voltage is directly proportional to average voltage, the galvanometer may be made to read R.M.S. value directly by suitable adjustment of R.

Frequent calibration is stated not to be necessary, and the calibration is altered little if at all when one valve is substituted for another of a similar type. Results are given for measurements from 100 down to 10 volts for three different valves. These show very good agreement.

R281.—Sur un Nouvel Isolant Electrique.—A. Samuel (*Comptes Rendus*, 18th Jan., 1926).

A description of a new insulating material, to which the name *thiolite* is given. It is derived from formic-aldehyde and creosol, and is produced (after treatment described) in the form of a white powder. The powder melts at a temperature of 80 deg., and can be further heated and moulded as a solid insulator. It sets very hard and is quite insoluble in any solvent. It is non-fusible and non-inflammable, and does not re-soften with heat. It is also non-hygroscopic and resists chemical action. Samples produced at the beginning of the research four years ago, show no sign of change. Its resistivity is quoted at 3×10^8 megohms per centimetre cube and its specific inductive capacity at 4.5. Its dielectric losses at high frequency are very low.

R300.—APPARATUS AND EQUIPMENT.

R342.—The Performance of Amplifiers.—H. A. Thomas (*J.I.E.E.*, Feb., 1926).

A detailed abstract of this paper appeared in *E.W. & W.E.* for January, 1926.

The first section of the paper deals with the measurement of voltage amplification. For H.F. measurements a known H.F. voltage (obtained by means of an oscillator and Dye transformer) is modulated 100 per cent. at 1,000 cycles and applied to the amplifier input. The output is measured by a vibration galvanometer. For L.F. amplifiers the 1,000 cycle oscillator is used. Results are shown for H.F. transformer-coupled amplifiers and for resistance-capacity coupling. The second section of the paper deals with the input impedance of the amplifier, *i.e.*, the effect which the connection of the amplifier has upon the oscillatory input circuit. Expressions are given for both cases, with or without reaction, and it is shown that the effect due to reaction can be expressed in terms of the known theoretical conditions. The last section of the paper deals with distortion in audio-frequency amplifiers. For the lower audible frequencies, 130-300 cycles, an Einthoven galvanometer was used for the measurement of distortion. For 1,000 cycles input a cathode ray oscillograph was employed. Cases of severe distortion are illustrated and analysed. The discussion which followed the reading of the paper is also given.

R350.—A.C. Relays.—H. P. Westman (*Q.S.T.*, Feb., 1926).

The article gives a description of a type of relay designed by the author for use on the A.C. supply to a transmitter. One relay is used to break the main power leads, and another as an aerial change-over switch. Constructional details and diagrams are given, with a photograph of the completed relay.

R360.—Short Wave, Plug-in Coil, Receiver Design.—F. J. Marco (*Q.S.T.*, Feb., 1926).

The receiver described uses plug-in coils for grid and reaction circuits. The coils are mounted together and terminalled on four plugs, the plugs of the grid coil being spaced widely apart. An

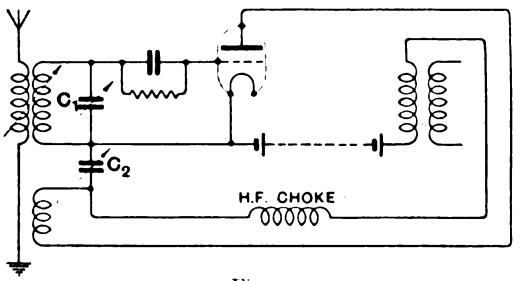

Fig. 1.

aperiodic aerial coupler is hinge-mounted on the base which carries the tuned coils. Three sizes of coil are described, for a total range of 15 to 130 metres. The coils are of spaced solenoidal winding on a skeleton former of 3 inches diameter. Coil A has 19 grid and 6 reaction turns, B 8 grid and 4 reaction, C 3 grid and 2 reaction turns. The grid

Digitized by Google

coils are of bare No. 18 copper wire, spaced its own diameter. The reaction coils are of small size (not stated) cotton-covered wire slipped inside the main inductance and glued in place at the filament end of the grid coil. The position of the reaction coil being fixed, reaction control is provided by the variable condenser C_2 of Fig. 1, where C_1 is of 140$\mu\mu$F and C_2 of 200-250$\mu\mu$F total. Calibration curves are given for the three coils described, the reaction control having only a very slight effect on the tuning.

R341.6 and R386.—BATTERY SUBSTITUTES.—R. S. Kruse (*Q.S.T.*, Feb., 1926).

An article describing extensive tests on various (American) commercial rectifier and filter devices for use with A.C. mains for H.T. supply to receiving sets. Thirty-two devices were tested, 19 being already on the market. These 19 are stated to be unquestionably the best of the assortment, although the relative merits of the various makes are not stated. The rectifiers tested fall into three classes: Gaseous tubes, with cold electrodes (*e.g.*, Epom, Raytheon, as recently referred to in abstracts in these columns); Electrolytic; Kenetron or thermionic diode; Kenetron plus gaseous tube; and one completely sealed but probably electrolytic. Tests were made with the following types of receiving set: A regenerative detector with two stages of high grade transformer L.F. amplification; a crystal detector with resistance-capacity L.F. amplifier; a supersonic heterodyne without L.F. amplification; two H.F. stages with detector and two L.F. stages; two H.F. stages with detector and three L.F. resistance-capacity stages. Some of the devices tested were not found suitable for the supply of complete receivers within the above classes. It is stated that the radio frequency amplifier was apparently most sensitive to remaining hum in the supply, and that it was possible to feed the L.F. system with some devices which were quite unsatisfactory for the whole set. Types and details of filters are discussed, and the article well illustrated with diagrams and photographs of many of the substitutes tested.

R351.218.—THE PIEZO-ELECTRIC EFFECT AND ITS APPLICATION TO WIRELESS.—C. W. Goyder (*E.W. & W.E.*, Feb., 1926).

R375.—SUR LA DÉTECTION ET LA STABILITÉ DE CERTAINS DÉTECTEURS.—H. Pelabon (*Comptes Rendus*, 11th Jan., 1926).

A note on imperfect contact detectors of the general form metal-dielectric-metal. Reference is made to a previous note in which the same author described the use of a metal plate with a powder of a metalloid and a metallic point. It is now shown that all dielectrics more or less give the same behaviour as a metalloid and that a sphere of 1 to 3 cm. in diameter may replace the point. Air alone as a dielectric is unstable, and the use of an insulating ring of about 1 mm. thickness is recommended, the sphere being compressed until detection is obtained. Powdered insulating materials (*e.g.*, sulphur, ebonite, glass, mica, etc.) may replace the ring, and excellent results are stated to have been obtained with silicon. The use of a very thin sheet of mica is also described, the sphere being compressed until a puncture is made in the mica. A thin coating of gum may also be similarly used.

R375.—SUR LE MÉCANISME DE LA DÉTECTION.—H. Pelabon (*Comptes Rendus*, 15th Feb., 1926).

A discussion of the theory of the rectifier arrangements described in the previous abstract. The role of the dielectric is twofold—it opposes the approach of the conductors and acts approximately as a restorer after the manner of a Branly coherer. Under a voltage, the two conductors are attracted, and the dielectric exercises an opposing force separating the conductors on the cessation of the voltage. A like state of vibration has been observed by other experiments (quoted). The distance e between the conductors thus varies between $e-a$ and $e+a$. When the sphere is at the closer distance of $e-a$ it is alternately electrically positive and negative. During the negative periods the surface density of negative electricity can attain sufficient value to permit some electrons to leap the very small space separating the conductors.

R351.218 and R384.—CALIBRATING YOUR WAVEMETER FROM A QUARTZ CRYSTAL.—J. M. Clayton (*Q.S.T.*, Feb., 1926).

An article describing the practical use of an oscillating Piezo-electric (quartz) crystal as a frequency standard for the calibration of another circuit. The crystal oscillating circuits are first discussed; the arrangement illustrated provides for the connection of the quartz between grid and anode or between grid and filament, the latter being preferred. An auxiliary generator, in the form of a Hartley oscillator, is then described, with the method of tuning it to the fundamental of the quartz drive. The wavemeter is then to be loosely coupled to the auxiliary generator and tuned for maximum drop in the auxiliary generator milliammeter. The crystal oscillator remaining untouched, the auxiliary drive is then tuned (by reduction of the condenser) to the second harmonic of the quartz drive, and the wavemeter tuned to this as before and so on throughout the available range of harmonics. Points should be recorded as obtained on squared paper so that any error may be detected at once. This refers particularly to the accidental selection of a "fractional harmonic," but the author later describes how these can deliberately be chosen to obtain a greater number of points. The article concludes with a list of sources (in America) from which quartz oscillators can be obtained.

R386.—ESSAI SUR LA THÉORIE DES FILTRES ELECTRIQUES.—P. David (*Onde Elec.*, Jan., 1926).

A lengthy treatise on the theory and practice of filters. First is considered the simple case of the reduction of current due to a circuit whose impedance is a function of frequency. If the ratio $\frac{\text{current without filter}}{\text{current with filter}} = \epsilon^{a}$, the reduction of current is said to be "a Napiers," and the Napier is defined as the reduction experienced by a current which is reduced to $1/\epsilon$ of its initial value.

Treatment is then developed for a simple filter

Digitized by Google

of negligible resistance, built up from consideration of the links of a filter chain. The conditions for filtration are stated and the expressions are used to show graphically the limits of frequency which will be passed. The treatment is applied first to the particular case of a low-pass filter, then to the cases of high pass and band pass filters. The effect of ohmic resistance is next considered, and expressions given for the modification of impedance due to its presence. The alteration in the case of a low pass filter is particularly illustrated. The latter part of the article considers the linking up of units of a filter chain, the units not necessarily being identical.

R386.—FILTERING THE SYNCHRONOUS RECTIFIER.—C. Hoover (*Q.S.T.*, Feb., 1926).

A description of the author's experiments on filtering the output of a rotating synchronous rectifier for transmitter supply from A.C. mains. The filter finally used has two effective capacities each of 1μF across the output, the first condenser having a series resistance of 6,000 ohms. A choke of 50 henries is inserted in one lead, and of 1 henry in the other.

R400.—SYSTEMS OF WORKING.

R401.24.—A PORTABLE TRANSMITTER.—A. H. Waynick (*Q.S.T.*, Jan., 1926).

A description, with photographs, of a small transmitter for 40-80 meters. The transmitter panel

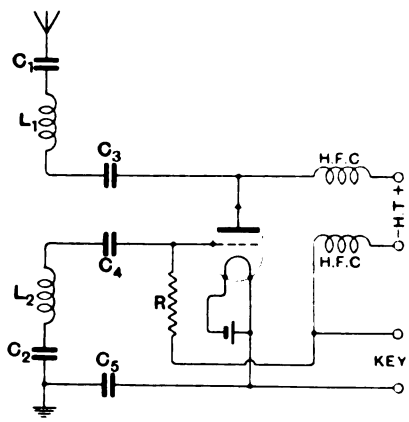

Fig. 1.

measures only 6½ by 11 inches. The circuit used is the Reinartz Sending Circuit, shown in Fig. 1. The following dimensions are quoted :—

C_1 and C_2 .00025μF variable.
C_3 and C_4 .002μF mica.
C_5 .00025μF mica.
L_1 and L_2 15 turns Lorenz coil, 3 in., diameter for 40 meters, or 30 turns for 80 metres.
R Variable grid leak.
R.F.C. Radio frequency chokes, each of 90 turns, No. 28 enamelled wire on 1½ inch tube ; the coils wound in opposite directions to each other.

The circuit shown is said to be very adaptable to aerials of various characteristics.

R500.—APPLICATIONS AND USES.

537.1.—REVIEWS OF PROGRESS—ELECTROPHYSICS. Prof. A. O. Rankine (*J.I.E.E.*, Jan., 1926.)

A review of the present position of knowledge on the fundamental electrical structure of matter, dealing with the atom, electrons, protons, etc., X-rays, ionisation potentials, photo-electricity conduction in gases and in metals, and magnetism.

R800.—NON-WIRELESS SUBJECTS.

R621.313.355.—ENTRETIERS D'UNE OSCILLATION LIBRE NON SINUSOIDALE PAR RÉSONANCE DE L'UN DE SES HARMONIQUES.—J. Fallon and A. Mandiut (*Comptes Rendus*, 1st Feb., 1926).

The article first considers the transient effect in an oscillatory circuit of frequency m when an oscillatory or alternating E.M.F. of frequency ω is impressed on it. It is pointed out that the transient term quickly becomes negligible, but if it is desired to obtain across the circuit condenser a voltage of frequency m, it is necessary that ω should be a harmonic of m. If the circuit has a magnetic—*e.g.*, iron—core and the transient term is sufficient to saturate it, the current wave is altered and the voltage across the condenser includes a fundamental of frequency m accompanied by a series of harmonics. This is capable of use as a frequency de-multiplier, *i.e.*, of giving an output frequency which is a sub-multiple of the input. The method used is by the connection of a suitable transformer across the condenser. It is stated that the arrangement has been used to obtain a frequency of 16⅔ cycles from a supply of 50 cycles.

R621.313.355.—SUR LA REVERSIBILITÉ DES MULTIPLICATEURS DE FRÉQUENCE À NOYON DE FER.—A. Blondel (*Comptes Rendus*, 1st Feb., 1926).

A theoretical consideration of the process described in the preceding abstract (Fallon and Mandiut). The fundamental equation for a frequency multiplication is considered, and it is shown that from this the reversibility of the process is to be expected. It is pointed out that the de-multiplier will tend to be less stable than the frequency multiplier, and that stability will be helped by an increase of load on the output circuit.

Digitized by Google

Correspondence.

Letters of interest to experimenters are always welcome. In publishing such communications the Editors do not necessarily endorse any technical or general statements which they may contain.

The Beverage Aerial.

The Editor, E.W. & W.E.

SIR,—I notice your correspondent, Mr. Kaye E. Weedon, in the February issue, makes inquiries with regard to the Beverage Aerial.* The Beverage Aerial is described and forms the subject of the United States Patent No. 1,381,089, granted to Mr. H. H. Beverage. A very excellent article by the inventor will also be found in the November, 1922, issue of *Q.S.T.*, on page 7. The aerial consists of a single horizontal wire of length equal to the wavelength to be received or of length equal to an integral multiple of the wavelength. The far end of the wire is earthed through a resistance equal to the surge impedance of the wire. An aerial suitable for 200-metre reception will be 650 ft. long and the surge impedance of such a wire is 550 ohms, assuming length stated and height 10 ft. from the ground. There are one or two effects which theory does not consider, so the most suitable resistance is best found by experiment, and in the case given above will be in between 200—600 ohms. The near end of the aerial is taken to earth through an inductance in the usual manner. For 200 metres this inductance should have a value of approximately 100μH. The receiver is then coupled on to this inductance. The aerial has no very special virtue except that its directional properties are enormous, which, of course, results in the reduction of static and interference. Unfortunately, it is impossible to erect such an aerial in the back garden as Mr. Weedon mentions!

DALLAS BOWER.

Brighton, Sussex.

* For a very complete description and discussion of the Beverage Antenna, see an article by Beverage, Rice and Kellogg in the *Journ. Amer. Inst. Elec. Engineers*, Vol. 42, 1923. Also a paper read by Busch in the *Jahrbuch des Drahtlosen Telegraphie*, Vol. 21, 1923.

Rejectors and Absorbers.

The Editor, E.W. & W.E.

SIR,—I have read with interest Professor Howe's article on Rejectors and Absorbers in your last issue, but feel there is one point which I do not quite understand.

Surely, for a circuit containing LCR in the form of a rejector the resonant angular frequency is given by ω where $\omega = \sqrt{\frac{1}{LC} - \frac{R^2}{L^2}}$.

I think it is correct that at resonance the impedance of a rejector is L/CR ohms, and that the power factor in the external circuit is unity, so that the value of V/I given as $\omega^2L^2/R+j\omega L$ is incorrect as it cannot be of unity power factor due to the presence of the term $j\omega L$.

Admittedly in practice R^2/L^2 is small compared with $1/LC$ so that the assumption that $R^2/L^2 = 0$ does not introduce appreciable error in assuming that the resonant frequency is $1/2\pi\sqrt{LC}$.

The impedance of a rejector circuit can be given by

$$\frac{1}{\left(\frac{\omega L}{R^2+\omega^2L^2} - \omega C\right)^2 + \left(\frac{R}{R^2+\omega^2L^2}\right)^2}.$$

from which at resonance

$$\frac{\omega L}{R^2+\omega^2L^2} = \omega C \quad \text{or} \quad \omega = \sqrt{\frac{1}{LC} - \frac{R^2}{L^2}}$$

and impedance

$$= \frac{R^2\omega^2L^2}{R} = \frac{L}{CR}$$

C. C. INGLIS.

[The statements made by Mr. Inglis are quite correct, and in the case of the rejector circuits it would have been better if I had not used the term resonance for the condition when $x=1$, or had explained more precisely the sense in which I used the term.

I was mainly concerned, however, to show the similarity between these circuits and the absorber circuit of Fig. 1, and to bring this out I considered in each case the condition $\omega^2CL=1$.

I would point out, however, that $\omega = 1/\sqrt{LC}$ is the resonant angular frequency of the rejector circuits themselves, that is, considered as closed circuits in which an E.M.F. is induced, and it was in this sense that I used the term resonance. It is not exactly the frequency, however, for which the rejector circuit, when forming two parallel paths for an external current as in Figs. 2 and 3, acts as a non-inductive resistance. In the case of Fig. 3, this angular frequency is given by the formula

$$\omega = \sqrt{\frac{1}{LC} - \frac{R^2}{L^2}}$$

as stated by Mr. Inglis, whereas in Fig. 2,

$$\omega = \sqrt{\frac{1}{LC - C^2R^2}}$$

G. W. O. H.]

"Wipe Out."

The Editor, E.W. & W.E.

SIR,—Mr. Scroggie has evidently misread my letter. I did not intend to convey that the inductance of the oscillator was changed by influence of 2LO.

While the oscillator is oscillating in step with 2LO it is quite possible that the re-radiation is 180° out of phase, which would account for the phenomenon.

S. BROWNING.

Kingstown, Ireland.

Digitized by Google

Some Recent Patents. [R·008

A NEUTRODYNE CONDENSER.

(*Convention date* (*U.S.A.*), *20th February*, 1924. *No.* 229,625.)

J. F. Dreyer and H. W. Dreyer and the Hazeltine Corporation describe the construction of a neutrodyne condenser in the above British Patent. The accompanying illustration shows that the condenser is a metal tube or piece of foil sliding over

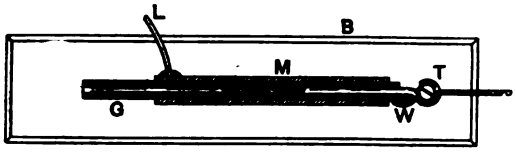

a piece of glass tube in which is located a piece of wire. Thus, in one arrangement, the condenser comprises a baseboard *B*, to which is fixed a piece of broad gauge wire *W* held by terminals *T*, around which is a glass tube *G* over which slides a metal tube *M*, to which a wire *L* is attached. Variation of capacity, of course, is obtained by sliding the brass tube along the glass tube, the wire inside the latter only extending about halfway. In another modification two pieces of wire are used projecting from either end of the tube, a metal tube sliding over the tube, capacity variation occurring between the two wires through the metal tube.

GRID-LEAK CONSTRUCTION.

(*Application date*, *12th January*, 1925. *No.* 244,284.)

M. Koopman claims the construction of a grid-leak or other similar resistance in the above British Patent, which is illustrated by the accompanying diagram. The grid-leak is made by taking a piece of ebonite or similar insulating tube *T*, and fixing screws *S* at each end. A flat is then preferably filed along the length of the tube and the two screw heads, when graphite is applied by any convenient means, and burnished. The element is then held between two clips connected to a measuring instrument, and more graphite is added or taken away, until the required resistance is obtained.

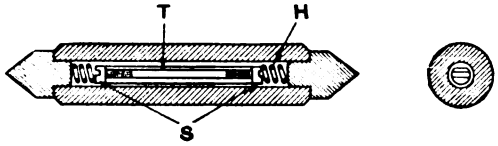

The unit so constructed is then placed in an ebonite or other insulating tube, provided with metal contact points adapted to be held in clips. Connection between the contact points and the resistance element is made by means of helical springs.

ANOTHER SQUEGGER CIRCUIT.

(*Application date*, *1st November*, 1924. *No.* 246,592.)

A rather interesting form of squegger circuit, and one which should appeal to experimenters is described by J. Robinson and N. Cox-Walker in the above British Patent. The squegger circuit, it will be remembered, is one in which a valve is provided with tuned high frequency circuits, coupled so as to produce a regenerative effect, the valve further being so adjusted that it will break into oscillation and cease oscillation at some audible frequency, this being known as the "squegger" effect. The accompanying illustration shows the broad idea of the invention. The grid circuit comprises an ordinary tuning coil L_1 and condenser C_1, a reaction coil L_2 being included in the anode circuit, as well as the telephones *T*. The grid circuit contains a grid condenser C_2 and an inductance L_3, the grid potential being regulated by means of the grid potentiometer *P*.

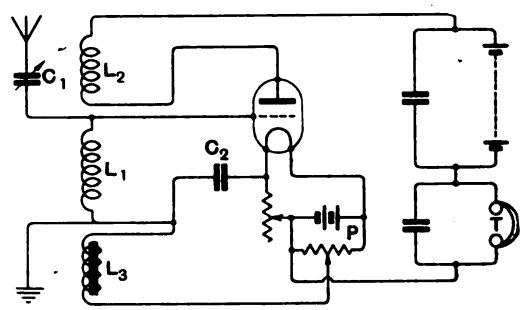

By-pass condensers are shown connected across the high tension battery and telephones. The aerial is tuned to the incoming signals in the usual way, by variation of the condenser C_1, which also controls the frequency of the high frequency oscillations which the valve is generating. With this adjustment a note will be heard in the telephones. On a signal being received, however, the telephone note will vary in frequency, and also probably in character. In operation the position of the reaction coil L_2 and the slider on the potentiometer have to be varied until a suitable squegger note is heard. The inductance L_3 may comprise a winding of about 10,000 turns of No. 42 copper wire, with a closed core of stalloy stampings, the resistance of the inductance being about 2,000 ohms, while the squegger condenser C_2 may be about 0.0003μF. Many modifications of the circuit are shown. For example, the telephones *T* may substitute the iron-cored inductance L_3. The value of the choke L_3 mentioned above is suitable for a high impedance valve. If a lower impedance valve is used, for example, of the order of 5,000 ohms, the inductance L_3 may comprise an air-cored choke, such as a 3,500 turn honeycomb coil. Or again a more compact inductance may

Digitized by Google

comprise 3,000 turns of No. 40 S.W.G. wire on a closed core of stalloy stampings. In another modification the high tension battery is dispensed with, the telephones being connected to the positive side of the low tension battery. Yet another modification consists in including a type of transformer, the primary circuit of which is in the anode circuit, while the secondary circuit comprises the inductance L_3. Those interested in experimenting with squegger circuits would do well to study the specification in detail, as it contains a considerable amount of useful information.

A MODIFIED IGRANIC TRANSFORMER.

(*Application date, 1st September, 1924. No. 246,535.*)

Some modifications of the well-known shrouded type of Igranic transformer are described in British Patent No. 246,535, which has been granted to the Igranic Electrical Company, Limited, A. H. Curtis, S. R. Wright and E. J. Brunning. The modifications are merely constructional details which tend to improve the efficiency of the transformer. It will be remembered that in the early type of transformer the two coils are arranged coaxially on a window type of core. In the accompanying illustration it will be noticed that the coils are still arranged in the same position, but a considerable air gap *A* is left between the primary *P*, and the secondary *S*. This, of course, very materially reduces the capacity between the two windings. Another feature of the invention lies in making the coils comparatively thin in relation to their diameter. The core has also been modified, and it is made in the form of a single rectangle *C*

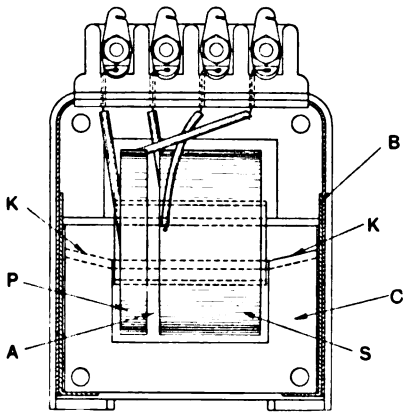

and comprises a number of separate rectangular laminæ, each of which is made discontinuous by a small cut at one point of the magnetic circuit. The core is assembled from the laminæ so that the cuts *K* come at different points in the magnetic circuit. The rectangular laminæ are then opened at the cut and threaded through the core, after which they are closed and pressed together. The edges of the core are further protected from the entrance of dust by providing copper or brass edges *B* which are bent round the ends of the laminæ. Another minor modification is the inclusion of a spring plunger type of terminal.

A DETACHABLE GRID LEAK.

(*Application date, 21st January, 1925. No. 246,305.*)

A very novel type of grid leak construction is described in the above British Patent Specification by C. Chapman. The invention consists in mounting a grid resistance element *E* between two discs *D* of ebonite or similar insulating material. The disc carries four sockets in the form of eyelets *I*,

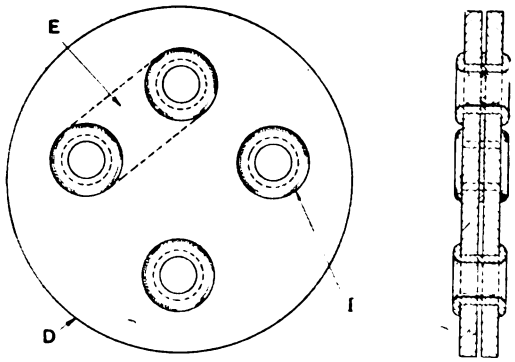

which coincide with the normal position of the valve legs, the eyelets serving to hold the two insulating discs together. The resistance element is connected between the grid eyelet and one of the filament eyelets. Thus it will be seen that if the valve legs are pushed through the appropriate eyelets the grid leak will be connected electrically between the grid and one of the filament pins. Simply by removing the discs and turning them over, and replacing them on the valve legs, the leak will then be connected to the other side of the filament.

A DISTURBANCE ELIMINATOR.

(*Application date, 16th February, 1925. No. 245,953.*)

A circuit intended to eliminate disturbances arising from electric light mains, and similar forms of electric interference, is claimed by A. E. R. Trotman in the above British Patent, No. 245,953. The device comprises essentially a radio frequency choke and small capacity condenser, and a low frequency choke and a large capacity condenser, which are arranged as a network, and connected to an ordinary receiver. The accompanying illustration shows the arrangement of the circuit. The novelty of the invention lies not only in the arrangement, but also in the actual values of the components. Thus, in the illustration, the radio frequency condenser C_1 is of the order of $0.0003\mu F$, and acts as a by-pass to radio frequency currents. The specification simply states that the iron-cored low frequency choke L_1 has a resistance of about 750 ohms, but no indication of its inductance is given. Between the aerial and the earth a high frequency choke L_2 is included. This may comprise about 350 turns of No. 42 double silk covered wire on a $1\frac{5}{8}$ inch former. This

Digitized by Google

inductance is in series with a large capacity condenser C_2 of the order of 1 to 3μF. It would seem that the arrangement allows high frequencies

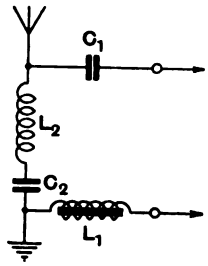

to be applied to the set, and substantially tends to eliminate the effect of any low frequency potentials which might be introduced by induction from the aerial or earth leads, or by leakage currents.

A LOW LOSS COIL FORMER.

(*Application date, 9th March,* 1925. *No.* 245,634.)

The construction of a low loss coil former is described by Fuller's United Electric Works, Limited, and A. P. Welch in the above British Patent. The accompanying diagram illustrates the type of former which, in effect, is simply a cylinder provided with a number of longitudinal fins or ribs. Actually the former is made out of sheet insulating material provided with a number of V-shaped ribs *R*. The sheet is then rolled into a cylinder, the ends being overlapped as shown at *J*. In order still further to increase the air space and remove as much dielectric material from the field as possible, holes *H*, or slots *S*, may be stamped

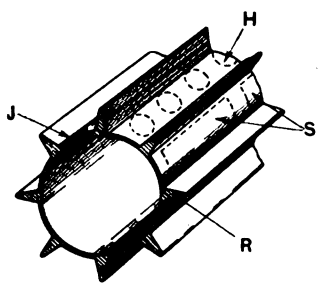

out of the sheet. The specification also provides for arranging the ribs spirally about the surface of the cylinder.

ANOTHER "ROUND" LOUD-SPEAKER.

(*Application date, 5th January,* 1924. *No.* 246,096.)

Some very interesting details of the construction of a loud-speaker are described by H. J. Round in the above British Patent, which relates essentially to a loud-speaker having an annular diaphragm. The ring diaphragm *D* is made of non-magnetic material, such as ebonite, and carries a cylindrical flange *F*. This flange is preferably attached to the ring diaphragm *D* by means of a strip of silk provided with a series of cuts to form tongues turned alternately to each side of the uncut portion, the tongues being attached to the flange by means of "Bakelite" varnish. The flange carries a coil *C*, through which the speech currents are passed; the diaphragm *D* is attached to two concentric rings *R* and R_1, by means of some flexible material *I*, such as rubber. The coil *C* carried by the flange *F* is, of course, immersed in a strong magnetic field. The method of communicating the vibra-

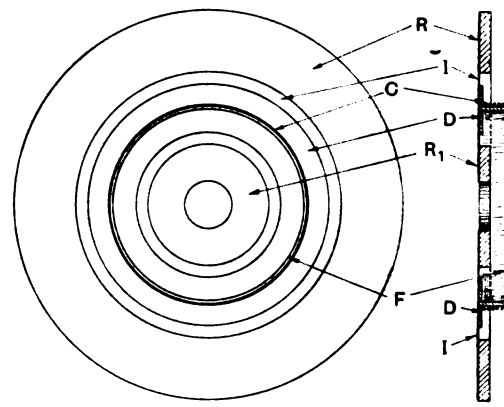

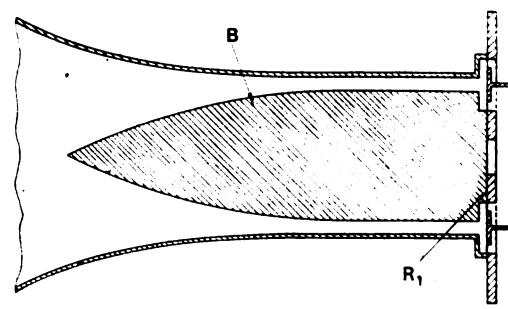

tions of the diaphragm to the air in the sound conduit is rather interesting, and is also shown in the accompanying diagram. It will be noticed that the inner ring R_1 has attached to it a device *B* of symmetrical formation, which is shown in cross section. Some interesting points in the specification are that the weight of the conductor in the coil *C* should be of the same order as the weight of the diaphragm, or a little greater. It is also stated that the elastic material supporting the diaphragm should preferably be stretched to such a degree as to communicate to the air system when vibrating at a frequency of the order of 80, but not more than 150. It is stated that it has been found that if the flexible material is left flabby, thereby giving a very low natural frequency, the response

Digitized by Google

of the diaphragm for the lower musical tones is likely to be such that the diaphragm may touch the pole pieces. The specification is very detailed, and describes several modifications of the diaphragm and construction of the magnetic system.

A DUBILIER LOUD-SPEAKER.

(*Application date, 27th October, 1924. No. 246,556.*)

A rather interesting form of coil-driven loud-speaker is described by The Dubilier Condenser Company (1921), Limited and A. Nyman in the above British Patent. The accompanying illustration shows the arrangement of the loud-speaker, in which it will be seen that there is an upright permanent magnet *M* to which are attached cylindrical walls *W* provided with laminated pole pieces *L*. Around the permanent magnet *M* is a coil *C* which is energised from a source of direct current. The diaphragm *D* is fixed to a bell-shaped portion *B* made of aluminium or other light metal. The mouth of the metal bell lies between the end of the permanent magnet and another winding *S* arranged round the laminated pole pieces. Thus it will be seen that the bell-shaped portion *B* is traversed by a relatively

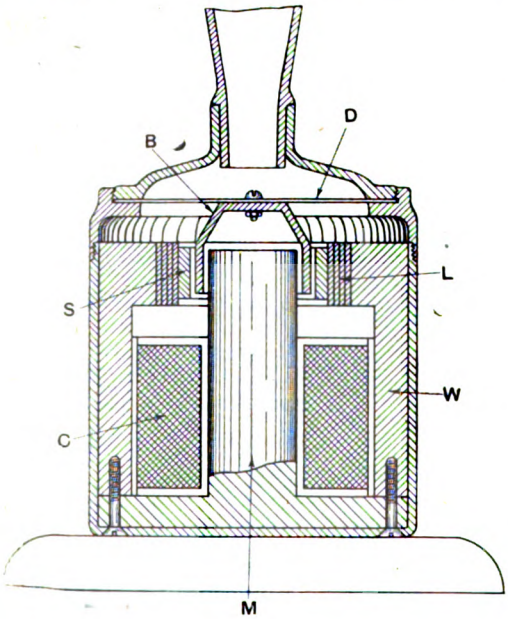

strong direct current magnetic field produced by the winding *C*. It will also be seen that if the speech currents are communicated to the stationary winding *S* the bell-shaped portion *B* will also be traversed by alternating currents induced by the speech currents, which will therefore cause the bell-shaped portion to move up and down, thereby imparting vibrations to the diaphragm *D*, which communicates with a sound conduit in the usual manner.

CONTROL OF FILAMENT CURRENTS.

(*Application date, 3rd November, 1924. No. 246,233.*)

H. Stevens and A. J. Stevens & Company (1914), Limited, describe a method of controlling filament current which is illustrated by the accompanying diagram. The filament circuit of a particular valve has included in it a resistance R_1, which is shown wound on a cylindrical former *F*. The

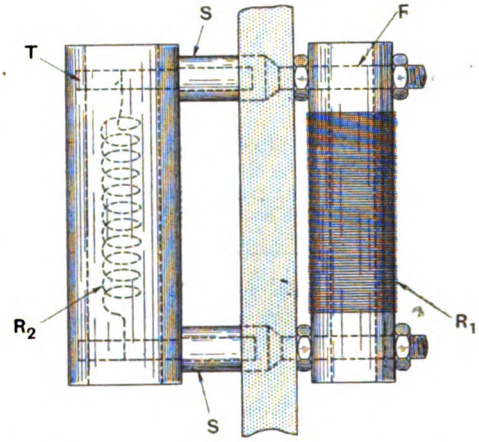

ends of the resistance are connected to two sockets *S*, on the front panel of a receiver. An additional resistance R_2 is mounted in an insulating tube *T* provided with pins which fit into the socket *S*. The resistance, which is permanently included in circuit, is intended to be suitable for use with dull emitter valves, and the resistance in the detachable tube is such that when it is connected in parallel with the fixed resistance it is suitable for use with bright emitter valves.

COMPENSATING FOR DISTORTION.

(*Application date, 14th October, 1924. No. 245,839.*)

A very interesting method of compensating for distortion in low frequency amplifiers in which the successive valves are coupled by transformers is described by P. W. Willans in the above British Patent. Distortion in low frequency amplifiers may be due to three causes: first, the diminution of impedance of transformer windings at low audible frequencies, secondly, the drop in the impedance of the transformer at high frequencies owing to its self capacities, and finally, magnetic leakage between the primary and secondary windings of the transformers. According to the invention, the distortion is compensated by employing reaction between the output and input circuits of the amplifying valves. The accompanying illustration shows the broad idea of the invention, in which a valve is provided with a transformer having primary windings *P* and secondary windings *S*. The usual filament batteries are omitted from the drawings for the sake of clearness. The transformer is connected so that the primary has its

Digitized by Google

windings in opposite sense to the secondary windings; that is, the ends connected to the anode and the grid are substantially in opposite phase. An impedance is then connected between the grid of the valve and the secondary circuit of the transformer, the impedance being shown at *Z*. If this impedance is a capacity the result will be to reduce the effective self-capacity of the transformer.

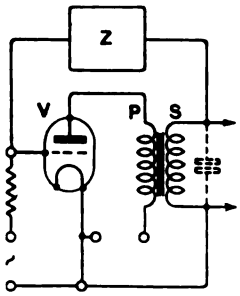

If it be an inductance the result will be to increase the effective self inductance of the transformer, thereby giving more amplification at the lower frequencies. If the impedance is composite, that is, comprising an inductance and a capacity, both the results will be obtained simultaneously. Again, if the impedance is simply a resistance the effect will be to increase the component of amplification in phase. Again a resistance in series with an inductance will compensate the effect of magnetic leakage. The exact nature of the impedance desired has to be found by experiment to suit the conditions of the transformer. The specification describes a number of similar modifications, in which an additional compensating transformer is connected so as to compensate for the effect of magnetic leakage. It is connected in series with the primary of the main transformer, the secondary being connected in the grid circuit of the valve. The illustration also shows an arrangement which will compensate for all forms of distortion likely to occur. The compensating transformer *C*, the main transformer *PS* and the compensating impedance *Z* will readily be recognised. The specification gives no indication of the desired value of the various components, which obviously have to be found by trial.

KEYING TRANSMITTERS.

(*Application date*, 13*th October*, 1924. *No.* 245,829.)

A very interesting method of keying transmitters which should prove useful to the amateur experimenter is claimed in British Patent No. 245,829 by N. E. Davis and W. T. Ditcham. The novelty of the invention lies in including a resistance in the supply lead to an independent drive valve or intermediate amplifier, and keying the transmitter by causing a sufficient voltage to be produced across this resistance which very materially lowers the normal potential of the independent drive so that the output from the last magnifier is either very considerably diminished or reduced to zero. The accompanying diagram illustrates the basic form of the circuit. The valve V_1 represents the last magnifier and the valve V_2 represents an inter-

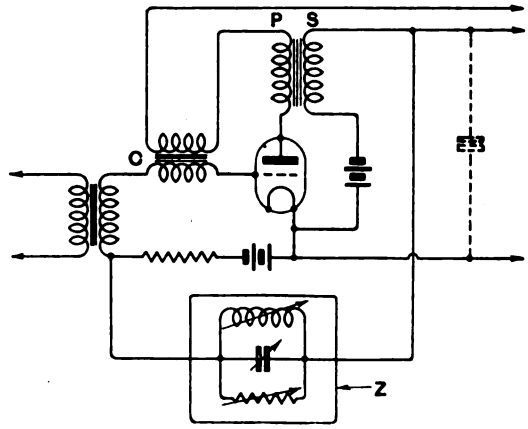

mediate magnifier, but the scheme may equally well be applied to the independent drive. The source of anode supply is at *B*, and it will be seen that the anode circuit of the valve V_1 is connected direct to this through the ordinary oscillatory circuit. The anode of the valve V_2, however, is connected through its oscillatory circuit by a resistance *R*. The valve V_3 has its filament and anode connected

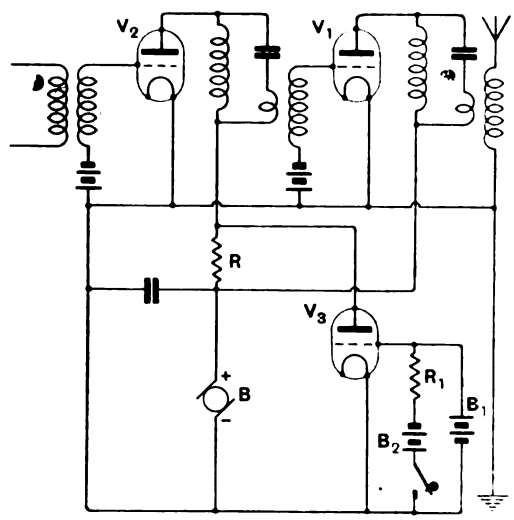

across the generator and the top end of the resistance *R*. The value of the resistance is such that normally the potential applied to the anode of the valve V_2 is sufficient for correct functioning. However, if a positive potential be applied to the grid of the valve V_3 the impedance of the anode filament space will be very considerably lowered. This

Digitized by Google

means that there will be a considerable potential drop across the resistance R, sufficient to lower the anode voltage of the valve V_2 to such a point that it ceases to amplify to any appreciable extent, or oscillate, as the case may be. This control is brought about by means of two batteries. The battery B_1 gives the grid a positive potential, and the battery B_2 connected to a resistance R_1 gives the grid a negative potential, the change being brought about by means of the key. The degree of control can be varied as desired merely by altering the value of the resistance R and the grid bias battery of the amplifier valves.

A REINFORCED DIAPHRAGM.

(*Application date, 24th October,* 1925. *No.* 245,704.)

The construction of a loud-speaker diaphragm is claimed in the above British Patent by E. V. Mackintosh and C. French. The novelty of the invention lies in the reinforcing of a conical diaphragm. The diaphragm is composed of some light material of the nature of paper and is made in the form of a cone C, reinforced with strips of bamboo B. The periphery of the cone is rigidly clamped to some material, such as bristol board R, while the apex of the cone A is attached to an electro-magnetic system E. It is stated that the weight of the cone may be of the order of one ounce, and that a 12-inch cone rigidly clamped at the edge will vibrate at a frequency as low as 60 cycles. The conical diaphragm and the driving mechanism is housed within a cabinet or container K provided with an opening O in front of the cone.

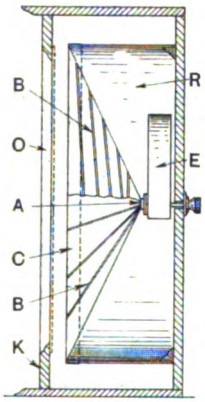

THE NEWEY CONDENSER.

(*Application date, 15th May,* 1925. *No.* 246,362.)

The Newey square plate condenser is described in the above British Patent by J. G. Newey and C. B. Jerred. The accompanying illustration should be sufficiently clear to illustrate the idea of the invention. It will be noticed that the condenser comprises two sets of square plates P designed to interleave with each other. The operating knob and dial are connected to a pinion G which engages simultaneously with two racks R formed on the end of sectors S. The two sets of plates are naturally insulated from each other. The lower half of the illustration shows the very low minimum capacity which exists in the zero position. It will be seen that on rotating the dial the pinion G will engage with the two sets of racks R, thereby causing the plates to interleave, the increasing area of overlap being substantially in the form of a rectangle.

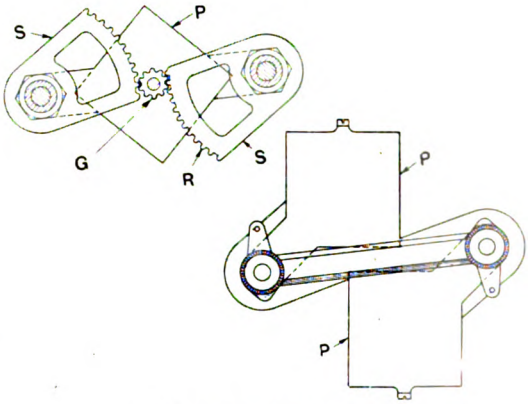

A SPACED INDUCTANCE.

(*Application date, 18th October,* 1924. *No.* 245,537.)

Lord Egerton of Tatton describes the construction of a rather interesting coil former in the above British Patent. The coil is built up upon a cylindrical former F provided with a number of longitudinal V-shaped grooves V. Spacing bars S of triangular cross section are provided with grooves G, and the spacing bars are arranged in the longitudinal grooves V on the cylinder, being held in position by pins P which pass through holes H in the centre of the bars. The inductance is wound over the first layer of spacers, the wire being held in the small grooves G. Another set of spacing bars is then placed over the first set as

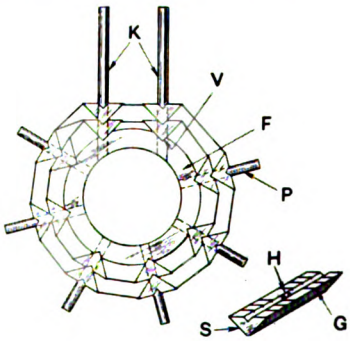

shown, and the second layer wound on. Two of the pins P are replaced by metallic connectors K, which serve the dual purpose of making connection with the ends of the coil and also holding two sets of spacing bars in position. The specification also provides for the use of slightly different shapes of spacing bars.

Digitized by Google

EXPERIMENTAL WIRELESS & The WIRELESS ENGINEER

VOL. III. MAY, 1926. No. 32.

Editorial.

j, the Heaviside Operator, and $\sqrt{-1}$.

IN this number will be found a letter from our contributor, Mr. W. A. Barclay, advocating the use of the Heaviside operator in preference to j in alternating current calculations. We publish this letter because it deals with a subject of some importance about which very hazy ideas are entertained by many who would be very pleased to have their doubts removed and a little light thrown on the real meaning of these symbols which are championed by various authorities. In our opinion the change suggested by Mr. Barclay is merely a change of label without any change of principle and we fail to find in his letter any argument showing a real advantage of one method over the other.

If any quantity, such as current or voltage, is assumed to vary according to a sine law, say for example $c = \hat{e} \sin \omega t$, a changing angle ωt is immediately introduced and with it the conception of a rotating line, the projection of which on some fixed plane is proportional at every moment to the varying quantity, although there may be nothing angular or rotating about the alternating quantity itself. The rotating vector idea is not something extraneous which may or may not be dragged into alternating current calculations, for it is there immediately the word sinusoidal is used. It is more fundamental than the sine wave. The rate of change of the quantity is proportional to the rate of change of the sine of the angle, *i.e.*, to $d/dt\ (\sin \omega t)$ or, putting D for d/dt, to $D \sin \omega t$, which is equal to $\omega \cos \omega t$. As Mr. Barclay points out,

$$D \sin \omega t = \omega \cos \omega t$$

and

$$D \cos \omega t = -\omega \sin \omega t.$$

By treating these as algebraic equations, and squaring and adding each side, it follows that $D^2 = -\omega^2$. Another step, however, and the difficulties begin, for if

$D^2 = -\omega^2$ then $D^2/\omega^2 = -1$ and $D/\omega = \sqrt{-1}$

and therefore, instead of $D \sin \omega t = \omega \cos \omega t$ we may write $\sqrt{-1} \sin \omega t = \cos \omega t$, which is algebraically untrue, as can be shown by expressing the sine and cosine in the exponential form, viz. :—

$$\sin a = \frac{e^{a\sqrt{-1}} - e^{-a\sqrt{-1}}}{2\sqrt{-1}}$$

and

$$\cos a = \frac{e^{a\sqrt{-1}} + e^{-a\sqrt{-1}}}{2}.$$

It will be noticed that this inconsistency has not arisen from the introduction of vectors nor from the use of j but from the application of algebraic methods to the formula $D \sin \omega t = \omega \cos \omega t$, which is not really an algebraic equation. Let us explain what we mean by this statement. D is not a number or magnitude which can be multiplied by another number or magnitude, but is a symbol showing that a certain operation

Digitized by Google

is to be performed on $\sin \omega t$, and this operation is of a peculiar nature, depending not on the value of $\sin \omega t$ at the moment considered, but on what it was a moment ago and what it will be a moment later. An indication of the impossibility of regarding this as an algebraic equation is given by the fact that when one of the factors on the left-hand side, viz., $\sin \omega t$ vanishes, the right-hand side has its maximum value. Nevertheless we agree with Mr. Barclay that the relation $D/\omega \sin \omega t = \cos \omega t$ is a very useful tool; one might simplify the writing of it, however, by putting j instead of D/ω, thus getting $j \sin \omega t = \cos \omega t$. Neither D/ω nor j are mere numbers but are symbols of operation; the former placed before a sine wave is an instruction to take its rate of change and divide by the angular velocity, and the relation just established tells us that the result is equal to the cosine, or in other words, if D/ω operates on the projection on the vertical of a rotating line, the result is equal to the projection of a rotating line of the same length 90° ahead. In other words D/ω applied to a vector rotates it 90° in the direction of rotation, but many people prefer to use the simpler symbol j for this purpose.

Throughout this article we use the word "vector" in the special sense in which it is usually employed in the graphical treatment of alternating currents.

When applied twice in succession D/ω or j rotates the vector through 180° and the projection on the vertical is equal and opposite to that of the original vector; thus $D/\omega(D/\omega \sin \omega t) = -\sin \omega t$.

This is equivalent to multiplying the vector, or the quantity represented by the vector, by -1, and this tempts one to assume that a single operation is equivalent to multiplication by $\sqrt{-1}$ and even to put $D/\omega = j = \sqrt{-1}$. This is only obtained, however, by the unjustifiable assumption that D/ω or j can be treated as an algebraic multiplier and that therefore $D/\omega \times D/\omega \times \sin \omega t = -\sin \omega t$, which is really meaningless. It is not surprising therefore that one arrives at the inconsistencies pointed out above.

As a matter of fact $j \sin wt$ is every bit as real as $\sin \omega t$, but since, in stating the horizontal and vertical components of a vector, it is necessary to label them in some way, so as to indicate that only those of the same kind can be added and subtracted, it is convenient to regard the label j as an imaginary quantity. When we write $z = r + jx$ we mean that the vector z has a horizontal component r and a vertical component x; without the j before it x would represent a horizontal line which could be added arithmetically to r, but with the j we know that x has been turned through 90° in the anticlockwise direction so that r and jx are at right angles. There is nothing imaginary about it, except that many people use the word imaginary as a label for the vertical components and similarly the word real as a label for the horizontal components, since it is generally known that one cannot add real and imaginary quantities. If we write $jz = jr - x$, we state that if we rotate the vector z through 90° we get a vector with a vertical component r and a horizontal component $-x$. It must be emphasised, however, that we did not really multiply z by j in an algebraic sense, when we wrote jz; what we did was to operate on z by turning it through 90°; similarly $j(jx)$ indicates the operation of turning the vertical line x through a further 90° and thus giving the horizontal line $-x$.

Hence this method is correctly known as the vector or symbolic method, but there appears no justification for introducing $\sqrt{-1}$ or any other imaginary quantity.

We will not deny that we have often made the mistake ourselves of saying let $j = \sqrt{-1}$ when we really intended j to be a vector operator, nor will we give a list of the well-known writers who have fallen into the same error, but we will endeavour to avoid such confusion in the future. We may summarise our conclusions by saying that

$$D/\omega \sin \omega t = \cos \omega t \quad \ldots \quad (1)$$

$$j \sin \omega t = \cos \omega t \quad \ldots \quad \ldots \quad (2)$$

$$\sin a = \frac{e^{ja} - e^{-ja}}{2j} \quad \ldots \quad \ldots \quad (3)$$

$$\cos a = \frac{e^{ja} + e^{-ja}}{2} \quad \ldots \quad \ldots \quad (4)$$

are all quite correct provided it be understood that j in (2) means something quite different to the j in (3) and (4). In (1) and (2) the D/ω and j are symbols of operation on vectors, which if operating twice in succession are equivalent to multiplication by -1, whereas in (3) and (4) j represents the algebraic imaginary $\sqrt{-1}$.

Digitized by Google

Losses in Inductance Coils. The Need for a Standard of Efficiency.

By S. Butterworth. **[R143**

ALTHOUGH the general non-technical user of inductance coils is now practically certain when he purchases a coil that he will get one which will tune in to the wavelength he requires, he has as yet no reliable means of forming any notion in regard to its efficiency. All he has to go by are the advertisers' pamphlets setting forth the views of the designer in his more optimistic moods or such expressions as "Maximum air space," and "Try this coil on your set and notice the wonderful improvement in purity and quality!"

The technical user can, of course, determine all the properties of the coil if he knows the inductance, self-capacity and the resistance at the wavelength of operation, but, even so how many know what is a reasonable resistance to expect for any given coil?

There is, therefore, a clear need for a numerical standard to safeguard the general purchaser and to enable him to form a fair estimate of what to expect in regard to increase in intensity on substituting a more efficient coil in a normal receiving set. If such a numerical standard can be established it is also very desirable that its value should be given on every commercial coil.

An outline will now be given of what the writer considers a feasible method of arriving at such a numerical standard. He recognises, of course, that there are alternative methods, and thus the method sketched is only to be looked upon as tentative and is offered as a basis for discussion.

The efficiency of the coil alone is conveniently expressed by its Power Factor or the ratio of resistance to reactance at the operating frequency. The Decrement gives the same thing, being the Power Factor multiplied by π, but the term "decrement" is a survival from the days when damped waves predominated. As applied to continuous waves, the term is meaningless. The reciprocal of the Power Factor gives the magnification of voltage across the coil with respect to the impressed voltage when in a resonant circuit of zero external resistance. The advantage of the Power Factor is that it is fairly constant for a well-designed coil over the whole of its working range. But, except in circuits, such as wavemeter circuits, the coil is usually in series with a very appreciable resistance, and comparative values of Power Factors have therefore a tendency to exaggerate the virtues of highly efficient coils. It is preferable, therefore, to suppose the coil in a circuit having a standard external resistance and to determine the voltage magnification when this circuit is tuned.

Since the capacities used in tuned circuits are usually of the same order, the standard circuit should have a standard capacity which is the mean of those normally used in a receiving set. This would imply that for each inductance there would be a normal wavelength at which the coil would be in tune with the standard capacity.

To make the numerical standard carry with it a general notion of the order of the efficiency of the coil, the measured voltage magnification should be expressed as a percentage of a standard magnification which would represent the proper magnification to expect with a reasonably efficient coil. This percentage could be given some such name as "Intensity Factor."

It is realised that we might manipulate the voltage magnification still further, as when the magnified voltage is impressed on the grid of a detector valve the resultant L.F. E.M.F. is proportional to the square of the voltage magnification and the final sound intensity to the fourth power, so that it is quite possible that some power of the voltage magnification would be more suitable.

The essentials for the proposed "Intensity Factor" are that it should convey some immediate notion of the order of sound intensities to expect with different coils and that it should contain a recognisable relation to some reasonable standard in this respect. The above mode of arriving at the Intensity

Digitized by Google

Coil.	No. 28 A.W.G.			32/38 A.W.G. Litz.		
	Res. ohms.	M.	I.F.	Res. ohms.	M.	I.F.
Loose basket weave ...	6.3	46.0	99	3.0	52.5	113
Single layer	6.6	45.5	98	3.5	51.4	110½
Radial basket weave ...	7.65	43.8	94	3.65	51.0	110
Narrow basket weave ...	10.4	39.8	85½	5.4	47.5	102
2-layer bank wound ...	10.6	39.5	85	4.3	49.7	107
Honeycomb	14.5	35.0	75½	5.5	47.4	102
3-layer bank wound ...	14.7	34.8	75	5.3	47.7	102½
4-layer bank wound ...	18.5	31.4	67½	8.7	42.1	90½

Factor fulfils these conditions, and as it does not preclude values greater than 100 per cent. does not need to set an impossible ideal before the manufacturers.

We will now examine how this system would work out in the case of coils intended for the broadcast range.

A suggested standard value for the Power Factor of the coil alone over the broadcast range is 0.005, a value which should be possible for a solid wire receiving coil of reasonable size.

The standard external resistance will be taken as 20 ohms as one has in mind a standard aerial circuit, and the standard capacity will be taken as 200$\mu\mu$F.

It is then readily shown that the standard voltage magnification is given by the formula

$$M_s = 200/(1 + 56.6/L^{\frac{1}{2}}.)$$

and the normal wavelength by the formula

$$\lambda_s = 26.7\ L^{\frac{1}{2}}.$$

L is the inductance in microhenries.

The following values hold for various inductances :—

	Microhenries.							
L	50	100	150	200	250	300	350	400
M_s	22.2	30.0	35.6	40.0	43.6	47.0	49.6	522
	Metres.							
λ_s	189	267	326	377	421	461	499	534

For intermediate values the curves shown (Fig. 1) are useful.

In the absence of an authoritative list of British coils the coils chosen for illustration will be those for which the tests are described in the Technological Paper No. 298 of the *Bureau of Standards*. All these coils have an inductance of 291 microhenries so that their normal wavelength is 455 metres, and the standard magnification is 46.5. The resistances at this wavelength and the deduced magnification (M) and intensity factor (100 M/M_s) for the coils are given in the table above.

These coils are said to be fairly representative of American coils in general. For details in regard to dimensions, etc., the reader is referred to the above paper. He should be warned, however, that No. 28 A.W.G. is roughly equivalent to No. 30 S.W.G. and 32/38 to 32/42.

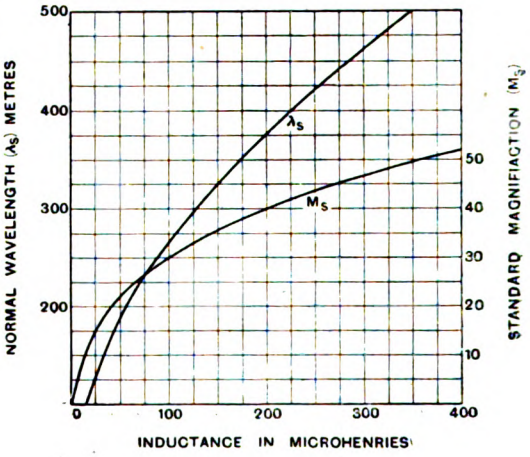

Fig. 1.

The Intensity Factors in the columns headed I.F. show that the assumption of a Power Factor 0.005 for a good solid wire coil at this wavelength is rather stringent but is not unreasonable.

The table may be left to speak for itself in regard to the utility of the Intensity Factor as a numerical standard of efficiency.

Digitized by Google

A New Valve Rectifier.

Inexpensive Accumulator Charging from A.C. Mains.

By L. A. Sayce, Ph.D., M.Sc., A.I.C. **[R355·55**

IF the happy time ever arrives when we shall be able to dispense with the lighting of valve filaments we shall have got rid of the chief inconvenience and expense of maintaining wireless sets. Until then, articles like this will continue to be written to point out how the trouble may be minimised.

Charging accumulators from D.C. mains is a simple matter and is inexpensive, too, if the cells are connected in one of the mains of the domestic supply. When this supply is A.C., however, we have to fulfil two requirements before accumulators can be charged satisfactorily: we must provide a transformer to "step-down" the voltage of the mains to a convenient figure, and a rectifier to supply a uni-directional current.

The construction of a suitable transformer has already been described in this Journal, and rectifiers, both electrolytic and mechanical, have also been discussed frequently.

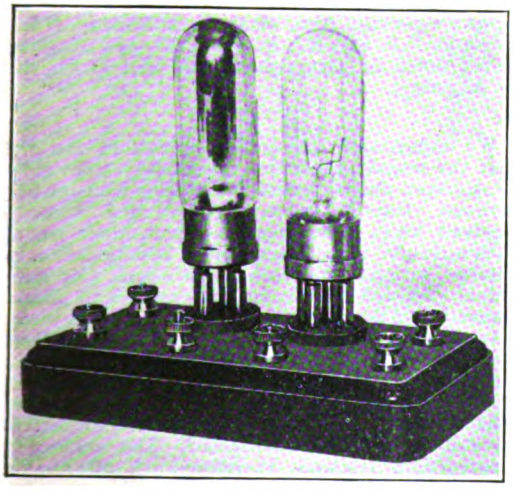

Fig. 1. *The rectifier panel.*

The present writer, after long use of both of these types, has, however, abandoned them, for accumulator charging, in favour of a little rectifier valve recently brought out by the Philips Lamp Co. (whose distributors in this country are Messrs. Mullard Radio Valve Co.). This valve, the low price of which is not its least advantage, gives a rectified output up to 1.3 amps and can be run without attention for an indefinite period.

The valve is provided with two large anodes and a spiral filament requiring an E.M.F. of about 2 volts to maintain it at the necessary dull-red heat. If a voltage much above 30 volts (R. M. S. A. C.) is applied between anodes and filament it "flashes over" and becomes conductive in both directions. A "resistance lamp" is therefore supplied for use with the valve, containing an iron filament which renders the valve perfectly stable because its resistance rises very rapidly with its temperature.

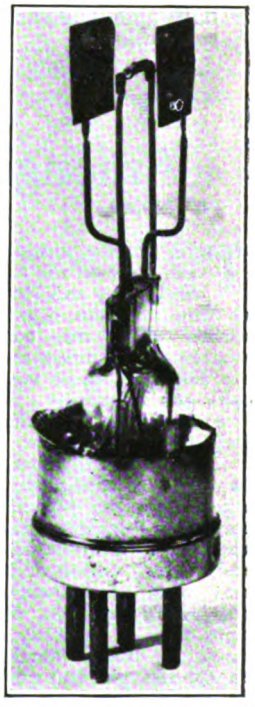

Fig. 2. *Internal construction of the rectifier.*

Fig. 1 shows a convenient method of mounting the valve and its stabilising lamp. Both of them are made to fit standard valve sockets and two of the latter are fixed to an ordinary 6 in. × 3 in. switch-block which is also provided with six terminals. Fig. 3(*a*) is a diagram of the circuit used and Fig. 3(*b*) is the wiring diagram. The valve, with its two anodes, could, of course, be used for full-wave rectification, but better results have been obtained by the circuit shown. It should be noted that the stabilising lamp has a centre tap to its filament. For the present purpose the two halves are connected in parallel and are represented as R_1

Digitized by Google

and R_2 in Fig. 3(*a*). S_1 is the main secondary winding of the transformer. The iron ballast resistance makes it unnecessary to have many tappings of S_1. The writer uses two only: 20 volts and 30 volts, the tapping in use depending upon the number of cells on charge. S_2 is another secondary winding giving a voltage of 2 volts for lighting the filament. Once the valve has commenced to work, this winding can be switched off and the filament will be kept hot by the discharge. The filament will last longer, however, if the filament current is left on continually, for the discharge then takes place along the whole filament instead of being concentrated at one place; and only a few extra watts are used.

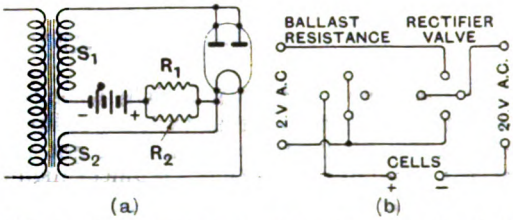

Fig. 3. *The circuit and wiring diagrams for half-wave rectification.*

Among the Experimental Transmitters.

[R009.2

THE Belgian station BW5 is transmitting by telephony on 180 to 200 metres every Tuesday, Wednesday and Friday, after 23.00 G.M.T. and on Sunday from 9.30 a.m. to 12.30 p.m., and wishes to get into communication with British amateurs who, unless they can converse in French, are asked to speak very slowly and repeat their call-signs frequently. Reports will be welcomed if sent *via* M. J. Mahieu, Le Manoir, Peruwelz, Belgium.

Apropos Mr. Mahieu's request, there seems to be a growing tendency on the part of transmitters, especially when working on telephony, to disregard the regulation that their call-signs should be announced three times at the beginning and end of each period of transmission. This neglect may possibly account for some of the ever-increasing complaints about the misuse of call-signs and it certainly prevents the transmitters receiving many valuable reports from listeners on the strength and quality of their signals which is, presumably, one of the main objects of experimental tests.

The article on Long-Distance Work by Mr. Hugh N. Ryan (5BV), which appeared in our issue for February, has aroused considerable interest and, incidentally, has revealed a number of amateurs who are also conducting experiments with a view to determining the relation between signal strength and weather conditions.

Mr. F. Weir-Mitchell, of the Government Radio Station, Maymyo, Burma, has, for some time past been experimenting in this direction and would like the help of a few transmitting amateurs in various countries. As the monsoon season is shortly expected in Burma, these investigations will be all the more interesting and Mr. Weir-Mitchell will particularly welcome weather reports from all parts of the world; these should preferably be sent weekly.

Mr. R. Pollock (G5KU), 4, Glenhurst Avenue, N.W.5, is studying the fading effects at sunset and nightfall and for this purpose is transmitting simultaneously on 45 and 23 metres at 18.15, 18.45, 19.15, 19.45 and 20.15 G.M.T. He will be glad to hear from any listeners who will co-operate in these tests.

Mr. A. M. Houston-Fergus (G2ZC and MAG), La Cotte, La Moye, Jersey, is also conducting a similar series of experiments on 45 metres and will welcome reports especially from amateurs in London, N.E.; England N.E. and E.; Scotland E., and England N.W. (north of Birmingham and west of Chester to Anglesey).

We understand from correspondents in Holland that the postal authorities are taking active steps to discover and suppress unlicensed transmitting stations. Dutch amateurs have not hitherto received much encouragement from their postal authorities, a few licences have been granted to wireless societies and technical colleges, but individual experimenters have been unable to obtain transmitting licences and have, therefore, in many cases, installed unauthorised sets, their call-signs being distinguished by the initial figure "o." Several of these unlicensed sets have been traced through QSL postcards sent by amateurs in other countries and some well-known transmitters have had their sets confiscated. The unlicensed amateurs in Holland, therefore, ask all foreign co-experimenters to avoid correspondence which may bring trouble upon them.

For new amateur call-signs allotted, changes of address, and general information on the subject of QRA's wanted or identified, we would refer readers to our weekly contemporary *The Wireless World* where this information is published as soon as it is received.

Digitized by Google

The Rugby Radio Station of the British Post Office. [R611

Paper read by Mr. E. H. SHAUGHNESSY, O.B.E., before the Wireless Section, I.E.E., on 14th April, 1926.

Abstract.

THE paper gives a very complete description of the Post Office high-power station at Hillmorton, near Rugby.

After a short introduction, dealing with the general requirements of the station, choice of site, etc., the paper falls into three general parts: (1) Power Plant, (2) High Frequency Generating Valve Plant, and (3) Masts and Aerials. The first and third subjects are dealt with comparatively briefly, the greater bulk of the paper being devoted to description of the technical wireless side of the station.

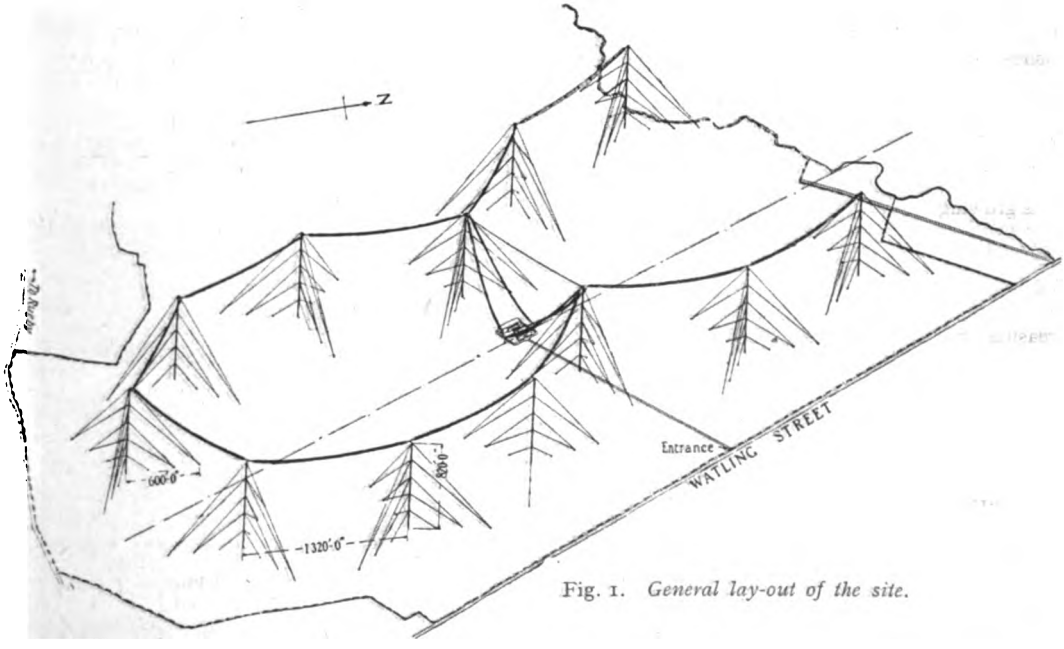

Fig. 1. *General lay-out of the site.*

Fig. 1* shows the general layout of the site, masts, aerials, etc.

Bulk supply of electrical power is taken from the system of the local supply company in the form of three-phase 50 cycle A.C., having an earthed neutral and 12,000 volts between phases. Duplicate cables are provided from the company's local station; the two-feeder cables terminate at the wireless station in a separate selector switch cubicle, which permits either or both cables to be connected to the E.H.T. alternating current switchboard. After considering the relative merits of machines as compared to mercury-arc, thermionic valve or other rectifiers, it was finally decided to install motor-generator sets for H.T. supply to the valves. Main motor generator sets provide high-tension direct-current supply to the valves, two frequency converter sets are used for heating valve filaments, and two motor generator and booster sets are provided for battery charging and low tension D.C. supply. All power used other than that required for the main motor generators is supplied by two auxiliary step-down (12,000 : 416 volt) transformers. Details are given of the various machines

* The author's original figure numbers are adhered to throughout this Abstract.

Digitized by Google

used, and of the wiring and protective devices employed. Diagrams (not reproduced here) are given of the layout of the power-house, and of the wiring of the motor-generator sets, control panels, etc.

The high frequency plant was designed to use valves to be capable of giving an output of 500kW to the aerial. The aerial was arranged so that it could be used as one large aerial or be divided at the station building into two unequal parts for simultaneous transmission on two aerials. The H.F. generating plant was accordingly arranged for such simultaneous transmission, but so far the smaller part has been reserved for experiments in transatlantic telephony.

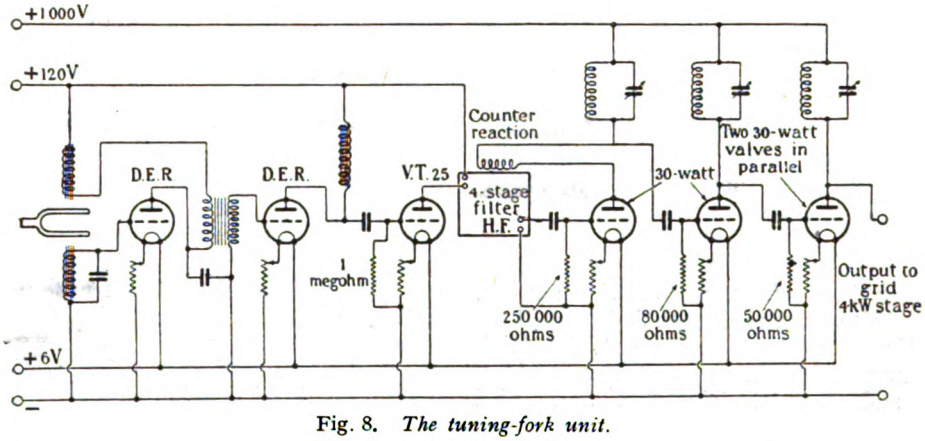

Fig. 8. *The tuning-fork unit.*

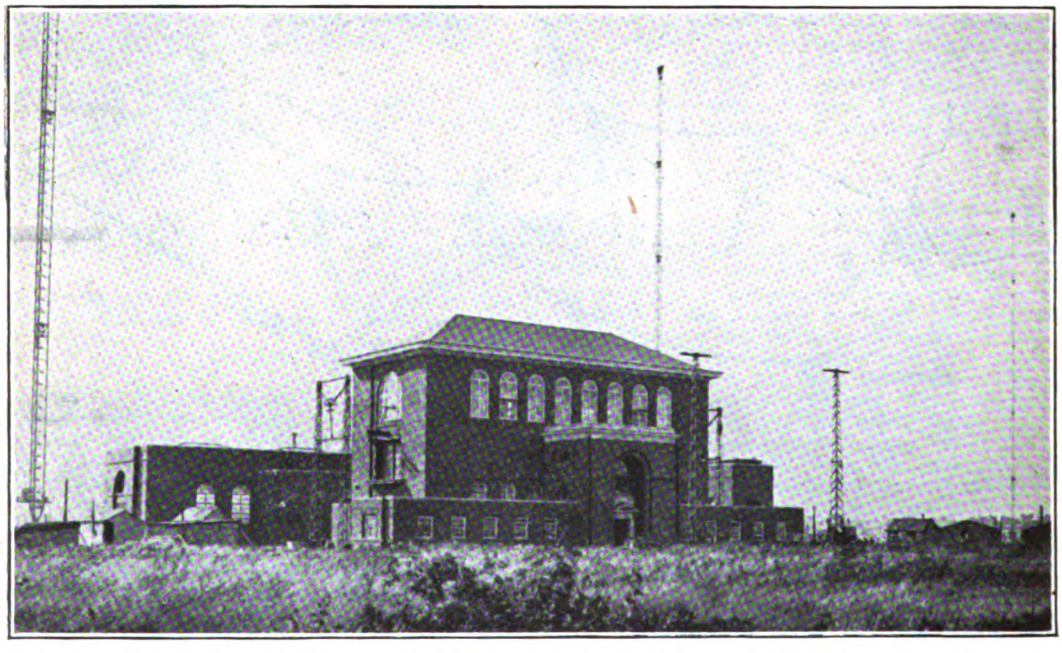

A general external view of the transmitting building. At the left-hand side of the building, on the upper window, can be seen the lead-in for the aerial now being used for the telegraphic transmission. The lead-in for the smaller aerial now being used for the experimental transatlantic telephony transmissions is at the corresponding window at the other end.

Digitized by Google

The aerial immediately available for the telegraph transmitter is, therefore, the larger part erected on eight masts. It has a capacity of 0.003μF, with a resistance of 0.7 ohm at 14kC and 1 ohm at 24kC. The combined resistance of the aerial and its tuning coil is slightly greater, being 1 ohm at 22kC.

To maintain constant frequency, a tuning-fork system was used as a master control, such an arrangement having already proved successful at the P.O. Station at Northolt. The valve-maintained fork has a frequency of about 1,800 cycles (adjustable within small limits), and the high frequency for controlling the main set is obtained by selecting the 9th harmonic by filtration. The frequency produced is remarkably constant, temperature variation being about 1 cycle in 10,000 per degree C. A small adjustable electric heater is provided to maintain a constant temperature in the box containing the fork. The general scheme of the fork and its immediate amplification is shown in Fig. 8, the complete unit shown being termed the "Tuning Fork Unit."

The output from this unit is amplified through three successive stages before it is delivered to the aerial circuits. The various stages are designed to deal with input powers of the order of 4kW, 50kW and 1,000kW respectively, giving output powers of 2kW, 30kW, and 540kW respectively. These are referred to as the 4kW stage, the 50kW stage and the "power units" respectively. The combination of the 4kW and the 50kW stage form an "excitation unit." These and the tuning fork units are provided in duplicate, and either tuning fork unit can be used with either excitation unit, while either excitation unit can be used to drive the final stage of amplification which consists of a number of "power units." All the stages and units are contained in high tension enclosures. All meters can be read conveniently, and such adjustments as are necessary while the power is on can be made from outside the H.T. enclosures.

The final stage (*i.e.*, the "power units") is not provided in complete duplicate. The power-station practice of having a number of units capable of being worked in parallel has been adopted, as it offers greater advantage in general flexibility.

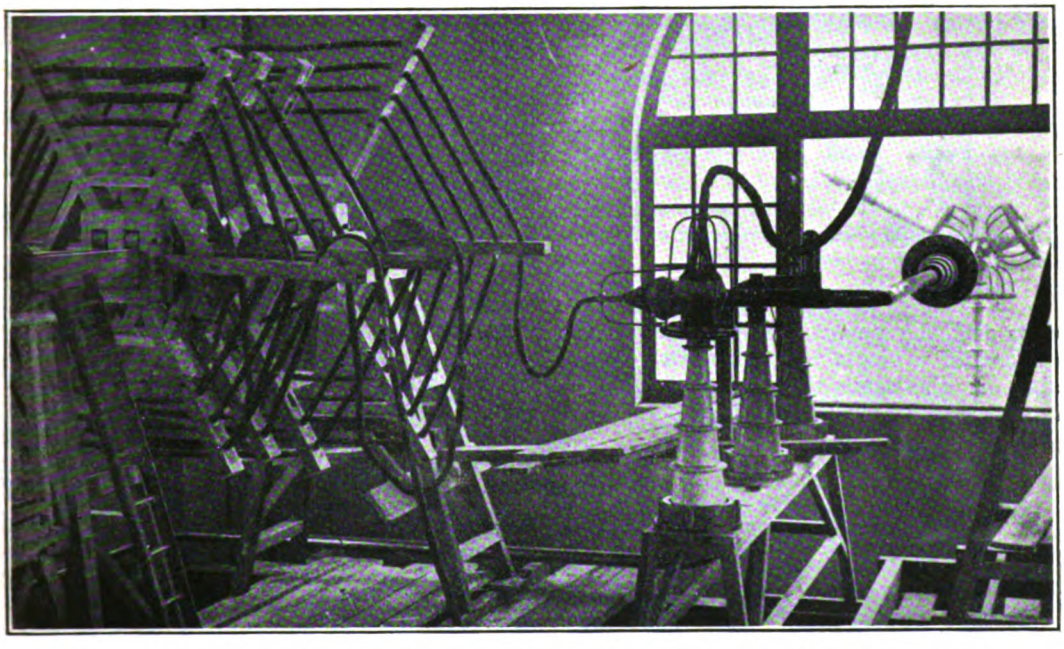

Photograph, taken from inside the building, showing the lead-in and also the inductance spiders.

Digitized by Google

The excitation units and the power units utilise the same H.T. D.C. supply. A simple arrangement permits this supply to be switched on to the 4kW stage, the 50kW stage and the power units in use by the pressing of a single button on the control table at the same time assuring that all accessible units are "dead."

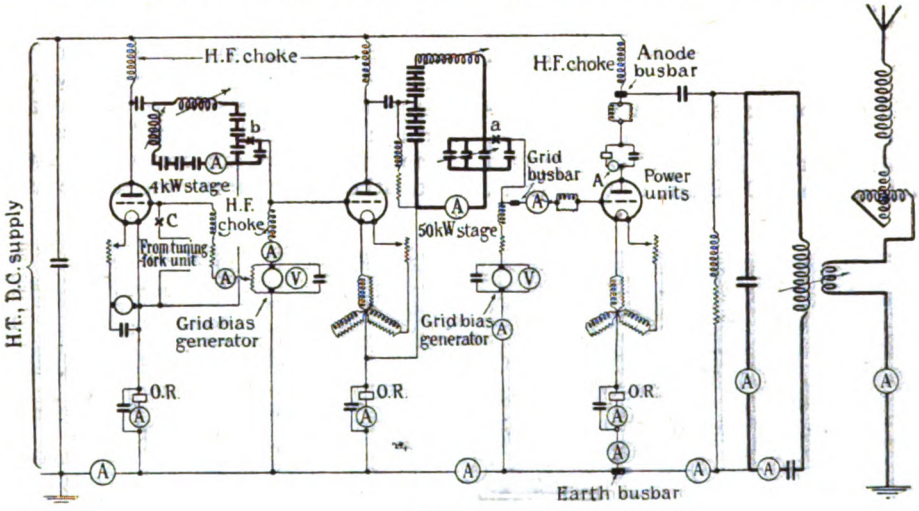

Fig. 10.

Fig. 10 is a skeleton diagram of the circuit arrangements from the output of the tuning-fork unit to the aerial. The tuned high-frequency circuits at the various stages are indicated by the thick lines. A particular characteristic of the circuits is the use of a single tuned circuit between one stage of amplification and the next, and the use of capacity coupling. An advantage of capacity coupling is that a condenser provides a low impedance path for the harmonics necessarily generated by a valve transmitter when operated as an efficient power amplifier, and thus acts as a desirable harmonic filter.

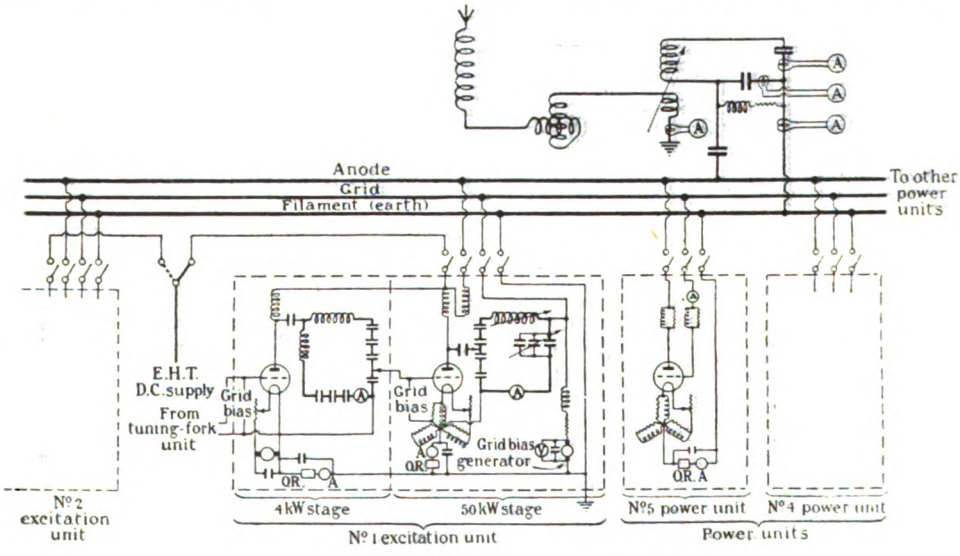

Fig. 11.

Digitized by Google

Fig. 11 is a schematic diagram showing the method of feeding the H.T. D.C. supply through a selected excitation unit to the

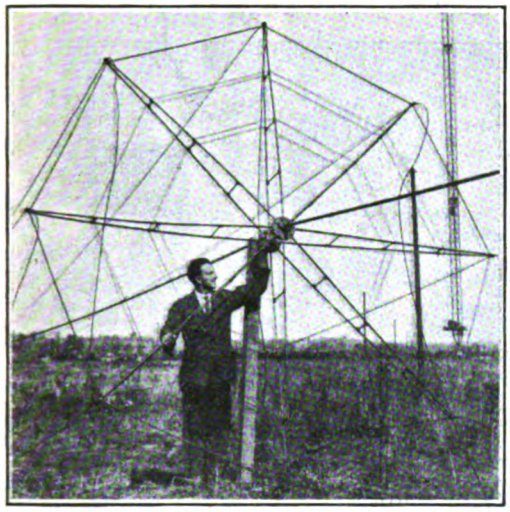

One of the aerial spreaders in the course of erection, the relative proportions giving a clear idea of their size.

power units. Three busbars run the length of the installation for the anode, grid and filament respectively. To bring a particular unit into operation in parallel with others it is only necessary to connect it to the busbars by one 3-way switch, and to light the filaments by means of the switch for the unit.

The filament supply for the 4kW stage is at 15-20 volts D.C., supplied by one of the generators in the auxiliary machine room. The supply for the 50kW stage and the power units is from 416 volts, three-phase, 100 cycles, transformed down to the 20 volts required by transformers in the units themselves. A regulator maintains constancy, and the load is balanced between the three phases to reduce the effect of any periodic change of emission current due to the use of A.C. for filament heating.

The 4kW stage utilises 600-watt glass valves. The 50kW stage utilises three water-cooled valves, similar to those of the power units. The inductances are wound of stranded wire on a framework of American whitewood, 243/36 S.W.G. being used for the 4kW stage and 729/36 for the 50kW. The condensers are mica in oil. With each excitation unit is a remote-controlled auxiliary machine unit of one motor driving four generators for: (1) Anode supply for amplification of tuning fork unit; (2) filament supply of 4kW stage and for tuning fork unit (by means of potentiometer); (3) grid bias for 4kW and for 50kW stages; (4) grid bias for power units.

Five-power units are provided, each capable of an output of 180kW from eighteen 10kW water-cooled valves made in England by the Western Electric Co. Three units are thus required for a 500kW aerial power transmission, leaving two units spare. Two

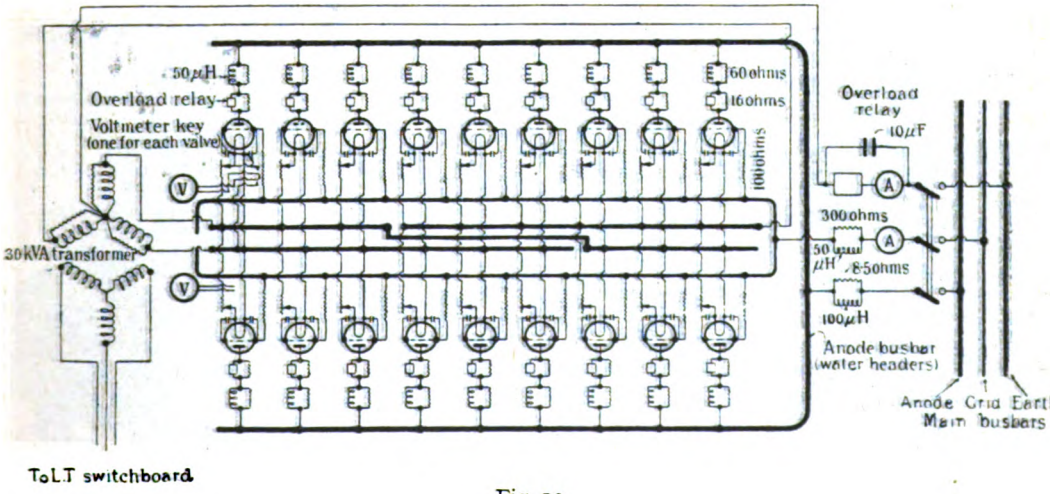

Fig. 13.

Digitized by Google

transmissions of over 300kW could also be undertaken by using two units for each, leaving one unit spare. Each power unit consists of 18 valves in a rectangular enclosure, arranged with nine valves on each side and a front slate panel containing meters. The three busbars run above the various power units and excitation units. The three-way switch for connecting a power unit to the busbars cannot be operated until gates on the sides of the units have been locked.

An internal view of the transmitting room. The control table is seen in the centre of the picture. The second engineer is standing beside the "excitation units," i.e., the 4kW and 50kW stages, as described in this abstract. To the extreme left are some of the power units. On the right is the L.T. switchboard.

Fig. 13 shows the wiring arrangement of a power unit. Reference is made to the difficulty of using a large number of valves

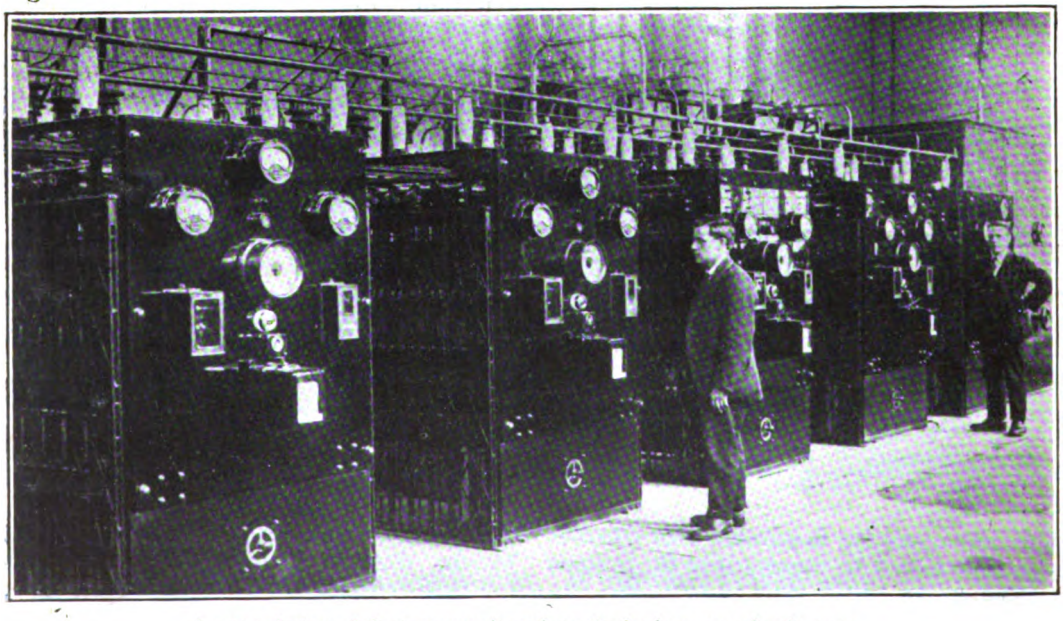

A general view of the power units, where the busbars are clearly seen.

Digitized by Google

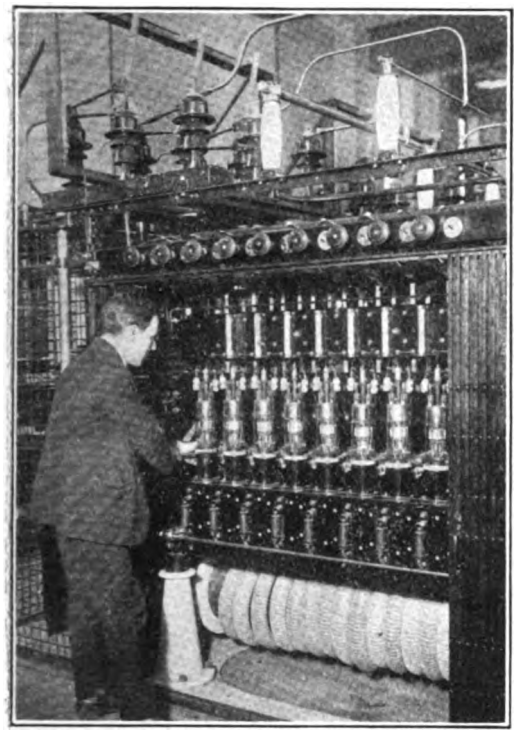

One of the power units with its Bostwick safety gate open on one side. The handles of the filament rheostat for each of the nine valves forming one side of the unit are seen above the gates, while eight of the valves are visible in the photograph, with an overload relay below each. The coil behind the insulator is a rubber water pipe.

groups, the inter-electrode capacity of adjoining valves or groups of valves forming the condenser of the oscillating circuit in association with the inductance of the leads. This difficulty is enhanced with water-cooled valves. The stabilising arrangements used in these units consist of: (1) Two small condensers of 400$\mu\mu$F each, mounted on each valve between the grid and each end of the filament; (2) a series non-inductive resistance of 100 ohms between each individual grid and the grid busbar; (3) the anode feed from the individual valves to the top water header (which acts as anode busbar) consists of a coil of 50μH in parallel with a non-inductive resistance of 60 ohms to the same header and a similar resistance to the bottom water header, the two headers being metallically connected at the end of the panel.

Inter-oscillation between the power units is prevented by the devices shown in Fig. 13 in the main feeds from the busbars to the unit. The combined anode is fed through a "stopper" consisting of 100μH in parallel with a resistance of 8.5 ohms. The combined grid is fed through a circuit of 50μH in parallel with a resistance of 300 ohms formed by six straight-filament lamps in series.

Details and illustrations are given of the safety devices and control circuits. A control table suitably placed in the transmitting

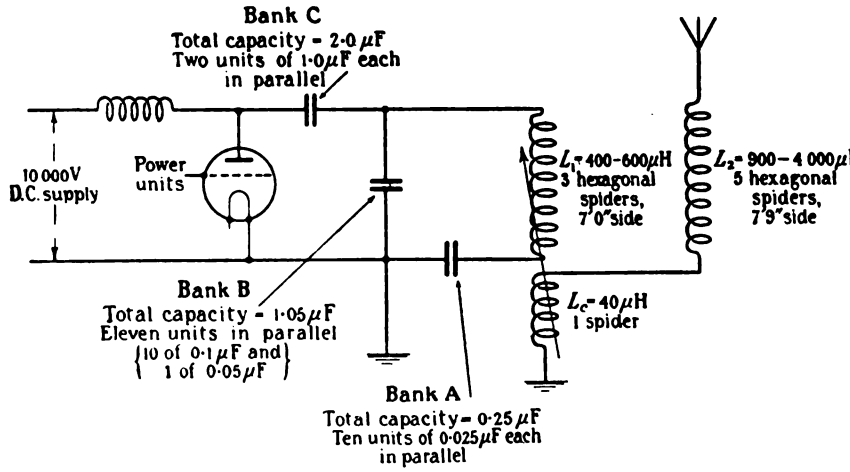

Fig. 17.

in parallel due to the tendency of the valves to "self-oscillate," either individually or in room contains all the essential controls and the most important meters of the wireless

Digitized by Google

transmitter. The control equipment comprises :—

(1) Press buttons to start and stop auxiliary machines.
(2) Press buttons to start and stop air compressor for keys.
(3) Press buttons for H.T. D.C. switch.
(4) Switch to start distilled water pump.
(5) Switch to start cooling-water pump.
(6) Switch for main filament supply.
(7) Filament supply voltmeter.
(8) High tension D.C. voltmeter.
(9) High tension D.C. feed ammeter.
(10) Ammeter reading H.F. feed current to main oscillating circuit.
(11) Ammeter reading H.F. current in capacitative arm of primary oscillating circuit.
(12) Ammeter reading H.F. current in inductive arm.
(13) Aerial ammeter.

Apparatus terminating the landline from the C.T.O., London, is also on one side of the control table, with controls to the power-house on the other side. The duty engineer has therefore full control of the entire station from his position at the control table.

The control table, the central sloping portion containing the switches and meters mentioned in this abstract. To the right of the table is seen the land-line apparatus and to the left is the apparatus for signalling power requirements to the power house. A loud-speaker and wireless recorder also permit checking of the actual signals sent out from the aerial.

The coupled aerial circuit is then considered. The use of a coupled circuit is emphasised for the reduction of harmonics, and various types of circuit are briefly

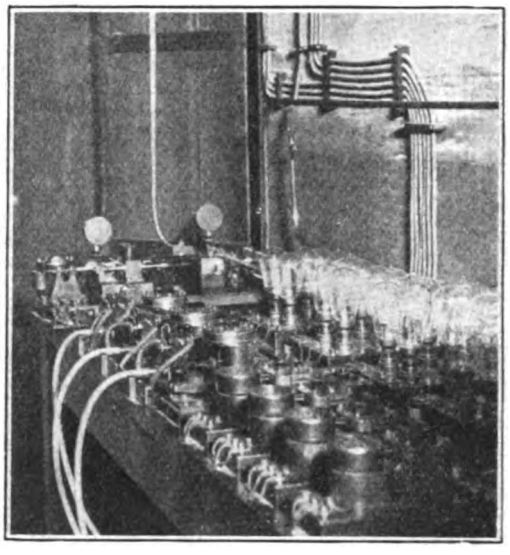

View of a Creed key and pilot keys. These are housed behind the 4kW section of the excitation unit.

reviewed theoretically. The circuits of Fig. 17 are stated to have been found satisfactory. Low decrements in both primary and aerial circuits being essential, it was necessary to provide the most efficient inductances, and condensers having very low loss. The economic and other considerations governing the choice of the electrical dimensions shown are briefly discussed. The condensers are mica, immersed in oil made by Messrs. Dubilier to P.O. specification. They have a power factor of 0.00025 at the working frequency. The coils are wound of a cable of 6,561 strands of 36 S.W.G., each strand being insulated by enamel and one covering of cotton or silk. The coils are wound on frames of American whitewood, the cable being wound in slots on movable wooden spiders which are supported on rollers on the wooden framework. Relative movement of the spiders gives a variometer tuning. The aerial coil has 5 spiders each of 8 turns in the form of a hexagon with 7 ft. 9 ins. external sides; inductance continuously variable from 900 to 4,000μH. The primary circuit coil has 3 spiders each of 4 turns in

Digitized by Google

the form of a hexagon of 7 ft. external side; inductance 400 to 600μH. The coupling coil has 2 turns 6 ft. 5 ins. external side; inductance 40μH. It is mounted on the same framework as the primary coil. The measured resistance of the entire primary circuit was 0.088 ohm at 16,000 cycles giving a decrement of 0.0053. That of the aerial inductance and coupling coil was 0.11 ohm.

Keying is effected by the simultaneous operation of a simple make and break key at each of the three points marked *X* in Fig. 10. Creed pneumatic keys are used for the points "*a*" and "*b*," and a magnetic relay key for point "*c*." The latter two keys when open leave a condenser between the grid and filament. The condenser is of sufficient value to make the grid-filament

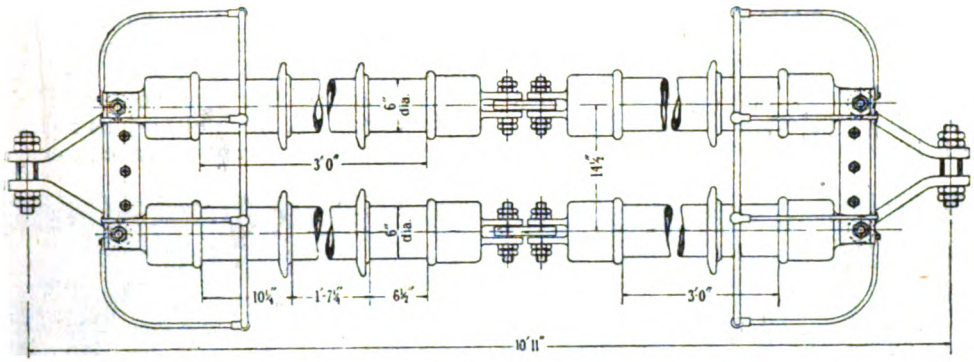

Fig. 25.

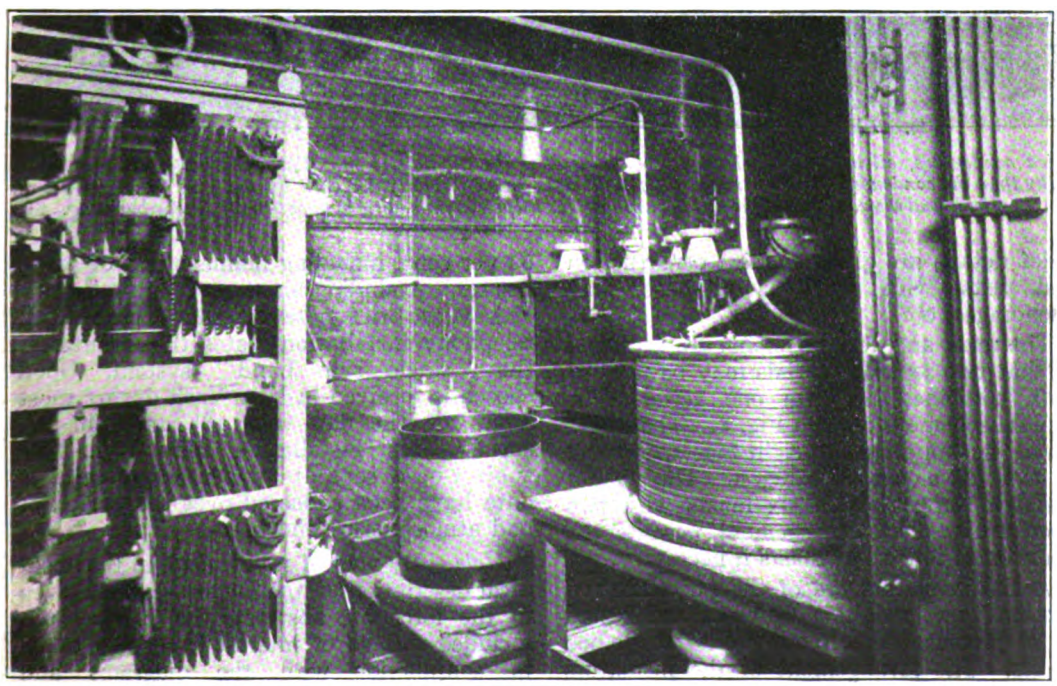

Some of the inductances in the amplification stages.

Digitized by Google

impedance capacitative, counteracting any tendency to self-oscillation in the stage concerned.

The following section on masts is brief (this subject having been dealt with in a recent paper before the Institution of Civil Engineers by Col. A. S. Angwin and Mr. T. Walmsley). The masts are 820 feet in height, and are of the stayed and pivoted type, insulated at the base. The pivot is 17 ft. above ground level; below this are columns of porcelain insulators and a granite cube, the whole supported by a steel column. Brief details are given of mast construction and tests, with diagrams of base, stay anchorages, etc.

The mast and aerial systems are arranged so that two separate aerials may be used or both combined to form one aerial. The general scheme is seen in Fig. 1. The larger aerial is supported on eight masts, forming in plan an elongated octagon. The smaller aerial is supported on six masts with two open arms. The arrangement permits the addition of four more masts if necessary.

Aerial insulators are of the porcelain rod tension type, weighing 6½ cwt., and tested to a pressure of 120,000 volts at 50,000 cycles. The arrangement of the insulators is shown in Fig. 25.

The earth system on the telegraph side consists of copper wire buried a few inches below ground and following the general plan of the aerial. An insulated counterpoise at 16 feet height has been erected under the smaller aerial.

Measurements of effective height of the aerial show that its value with the masts insulated is 1.22 times its value with the masts earthed. The former value is 607 ft., or 78.5 per cent. of the mean geometric height of the aerial. A table of various measured values reveals a transmitter efficiency of 64 per cent. including filament and of 71-72 per cent. excluding filament.

A very brief note on the experimental telephony installation states that it utilises the "single side band" system. Good speech is received in New York during most hours of the day with 185 amps in the aerial. This installation may form the subject of a separate paper when reliable data have been collected over the period of bad atmospheric conditions.

Note.—By way of supplement to the technical description of the Rugby station, given in the foregoing abstract, the photographs included will be of interest to readers taken in conjunction with the diagrams and descriptions in the abstract.

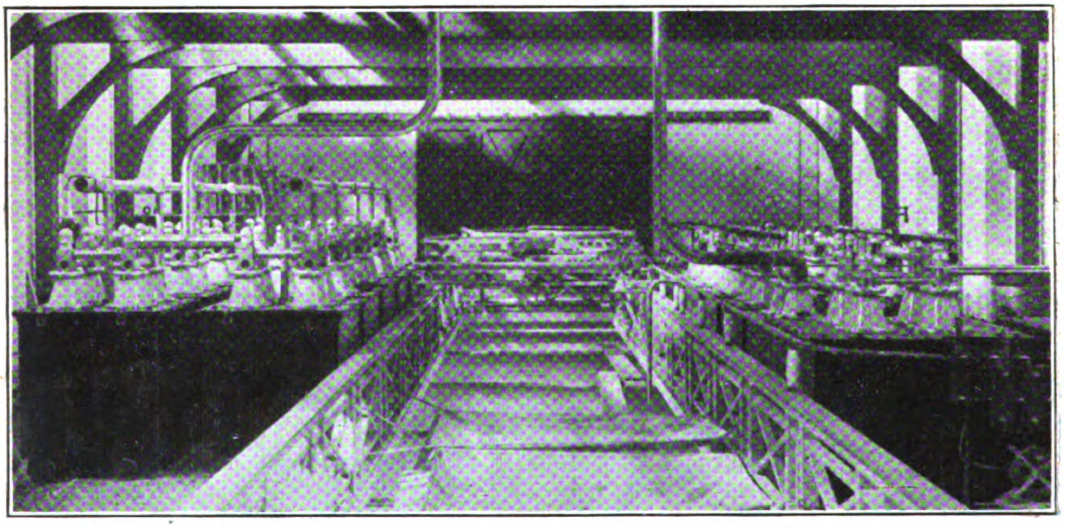

Mica condensers, oil-immersed, which are being used at the Rugby station. The mica pattern is much less bulky than the condensers of aluminium plates immersed in oil formerly designed by the Post Office for use at Leafield, and the adoption of the mica condenser has helped in the saving of space in the Rugby building.

Digitized by Google

DISCUSSION.

The meeting was very largely attended, and a lengthy discussion followed the reading of the paper.

The discussion was formally opened by the Chairman reading a communication from **Dr. W. H. Eccles** (Vice-Chairman of the Wireless Commission), who was unable to be present. Dr. Eccles referred to the excellent co-operation which had existed between the Commission and the Post Office engineers working under the author, and to the large detail of design work done by the engineers. The splendid operation of the station was a testimony to the value of the design work.

A telegram was also read from **Mr. L. B. Turner,** a member of the Commission, regretting his absence through indisposition, and complimenting the author.

Sir G. Wrightson (head of the firm erecting the masts), after referring briefly to early developments of wireless, spoke of the smoothness which characterised the work of erecting the masts. Despite the heights involved, no serious accident occurred.

Mr. C. F. Elwell, comparing Bordeaux on arc, and St. Assise on high frequency alternator, said that the P.O. had anticipated valve practice in the design of the Rugby station. In the paper there was much to praise and little to criticise. He referred to the possibility in future design of fewer taller and more widely spaced masts with greater aerial pulls. He also discussed the work of maintaining small valves, and hoped for the possibility of one large valve with renewable parts to replace, say, all the valves of one of the power units.

Capt. P. P. Eckersley congratulated the author on the absence of interference in the broadcasting band, and spoke of the high state of H.F. technique in the Rugby station. With reference to tuning-fork control of frequency, the B.B.C. had actually used a 890 cycle fork as a drive for a relay station working at nearly one million cycles. He raised the possibility of omitting mast insulation and compensating the efficiency by increased amplification.

Mr. G. Shearing first referred to the large undertaking of valve transmission on the scale described. The Admiralty and H.M. Signal School had always advocated valves for high power generation, and it was gratifying to see the results now described. Having regard to the advances of short wave communication, might not Rugby be the climax of long-wave high-power practice? He also raised several points in connection with the power plant and other details. He believed rectifiers might have proved more advantageous than H.T. D.C. machines. Why was the filament supply converted to only 100 cycles? Would not a higher frequency have been an advantage?

Mr. R. N. Vyvyan congratulated the author and his staff on the design of the Rugby station, but expressed his confidence in the short-wave beam system as the solution of transmission.

Mr. Gibson discussed several points in connection with the use of distilled water for the cooling of the anodes. Higher electrical insulation with smaller loss was the first result, while undistilled water had also detrimental effects on the metal of the anode. He agreed with Mr. Elwell as regards the need for a larger valve, but considered a sealed-off pattern was more desirable than one with replaceable parts, possibly necessitating continual pumping, on account of difficulties with traces of gas.

Mr. Shaughnessy briefly replied to several of the points raised in the discussion. The height and arrangement of the masts was chiefly a matter of economics. As regards the valves, those used were the largest available, and the arrangement of the power units described permitted flexibility as regards the testing of any new types of valve that might be developed. As regards short waves he did not consider that there had yet proved sufficiently stable and reliable for systematic work. The use of machines for H.T. had the advantage of putting no keying fluctuation back on to the company's mains, while the motor-alternator for filament lighting was used chiefly to take advantage of regulation by Tirrill regulators in the interests of constancy as compared with the fluctuations of voltage if a transformer had been directly used. As regards beam communication he hoped that this system might in the future do even more than was claimed for it.

On the motion of the **Chairman** (Major B. Binyon) a very cordial vote of thanks was accorded to the author.

Digitized by Google

Laboratory Notes.

Two Useful Devices Described.

By E. Bainbridge Bell. **[R387 and R381.5**

IN the course of research on wireless receiving circuits involving the use of frame aerials, where stray and unbalanced capacity effects are objectionable, the following two devices have been found useful :—

(1) An Electrostatic Screen.

In an air-core transformer with " pancake " coils, it is necessary to insert an earthed screen between the windings in order to make use only of electro-magnetic coupling. In order to avoid eddy current paths these screens have been made of thin metal sheet with many transverse slits. We have found the following a quick and easy way of making such screens :—

A cylindrical wood former, say 4 inches in diameter, is covered with thin paper and closely wound with one layer of 26 D.C.C. wire. A strip is bared along a generator of the cylinder and a strip of copper is then soldered to the wire where it has been bared. The whole is covered with a solution of celluloid in acetone and dried. The solenoid is cut along a generator of the cylinder, unwrapped and flattened out. The result is a flat screen with the eddy current paths limited to the diameter of a single wire.

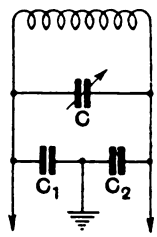

Fig. 1.

(2) A Condenser Potentiometer.

When using a frame aerial it is often necessary to equalise the capacity of each side of the frame to earth, and as the capacity of the two balancing condensers C_1, C_2 (in series) (see Fig. 1) is in parallel with the frame and tuning condenser C, it is generally necessary to readjust the tuning condenser after adjusting the balancing condenser, a good balance involving several readjustments.

If, however, the two condensers C_1 C_2 are coupled together in such a way that

$$1/C_1 + 1/C_2$$

is constant for any adjustment, retuning the condenser C is avoided.

Where a large (1,000$\mu\mu$F) adjustment is necessary, two " Polar " condensers are used. These have a law approximately

$$C = k/a - d$$

when d is the scale reading and k, a are constants.

Two of these are connected by a coupling sleeve in such a way that as the spindle of one is turned through a given angle, the spindle of the other is turned through the same angle in the opposite direction.

If d_1 d_2 are the angles through which the spindles are turned,

$$d_1 + d_2 = \text{constant.}$$

Now $C_1 = k/a - d_1$ $C_2 = k/a - d_2$

$$\therefore \quad \frac{1}{C_1} + \frac{1}{C_2} = \frac{a - d_1}{k} + \frac{a - d_2}{k}$$

$$= \frac{2a - (d_1 + d_2)}{k} = \text{constant.}$$

If only a small variation is necessary a " neutrodyne " condenser made by Messrs. Bowyer-Lowe can be modified as follows :—

The condenser consists of a fixed and a moving plate, the capacity being adjusted by moving one plate at right angles to itself by a screw motion. An extra fixed plate was fitted so that the moving plate was between the two fixed plates.

The law of each condenser was then :—

$C = k/d$ (where d is the distance between one fixed plate and the moving plate).

If $C_1 = k/d_1$ and $C_2 = k/d_2$: $1/C_1 + 1/C_2$
$= d_1 + d_2/k.$

Now $d_1 + d_2$ is constant.

Therefore $1/C_1 + 1/C_2$ is constant.

Digitized by Google

Mathematics for Wireless Amateurs.

By F. M. Colebrook, B.Sc., A.C.G.I., D.I.C. **[510**

Introduction.

THIS series of articles is intended for those wireless amateurs who wish to understand their subject but find that they are seriously handicapped by a lack of mathematical knowledge. It will be assumed that they gave up mathematics when they left school, and have probably forgotten nearly all they ever knew about it.

No doubt there are many amateurs in this position who are quite willing to be so and who even pride themselves on being "practical men" and not mere "paper merchants." In so far as this is a genuine distrust of theorists and not a case of sour grapes, it will be sufficient to refer them to the history of the subject. There they will find that the so-called practical man is generally not nearly so practical a person as the wool-gathering theorist and mathematician. The story of the loaded telephone cable is a particularly good instance of this.

Again, of those who realise the necessity of mathematics, there are probably many who are scared of the subject and convinced of their inability to tackle it. They may think that theirs is what Oliver Wendell Holmes neatly described as the $2+3=5$ sort of mind, as distinct from the $a+b=c$ kind. But this partition, though real enough, is not an insurmountable wall, dividing mankind into two classes. Given desire enough, almost anyone can find the way over, for mathematics is really no more than the hitherto pedestrian faculty known as common sense trained in the use of its wings, and everyone has a certain amount of common sense.

Finally, there may be those who think themselves too old to commence the study of mathematics. Actually this idea need not deter them at all. Plato recommended that no one should commence the study of philosophy, which included mathematics, before the age of twenty-one, and there is much to be said in favour of this view. Generally one starts too early, rather than too late, and risks acquiring a permanent distaste for the subject by so doing.

Now a word about the scope of the series. As the title implies, it is proposed to deal with the subject from the special point of view of wireless amateurs. This means that particular attention will be given to those ideas and methods which are most likely to be of use to wireless amateurs. It does not mean that only these ideas and methods will be considered, because that would be impossible. Mathematics can be divided up into various branches, but no one of these is independent of the ideas embodied in the others. Much of what follows will appear to have no direct bearing on wireless telegraphy, but the reader must be content to accept the fact that in these matters one cannot always see the end from the beginning. Take, for instance, the proposition that the area of the square drawn on the longest side of a right-angled triangle is equal to the sum of the areas of the squares drawn on the other two sides. At first sight this would not seem to have much to do with alternating current circuits, but it eventually proves to have a very close connection indeed.

The series will be divided into five parts, according to the following rough classification :—

Part I.—Elementary Algebra.

Part II.—Plane Geometry.

Part III.—Trigonometry, including Elementary Hyperbolic Trigonometry.

Part IV.—Elementary Differential and Integral Calculus.

Part V.—Vectors, and their application to Alternating Current Problems.

Each subject will be started right from the beginning. Moreover, the elementary part of each subject will be considered very fully and very deliberately. In mathematics, as in most other things, it is the first step that counts. Once the fundamental ideas are well and truly assimilated, the rest is easy.

Digitized by Google

Even for those who feel themselves to be already well grounded, this return to the beginning will not necessarily be a waste of time, for memory, though a good servant, is also a presumptuous one and sometimes tries to usurp the place of understanding.

PART I.

ELEMENTARY ALGEBRA.

1. Symbols.

One of the most characteristic things about algebra is its appearance, and to a beginner it is certainly not prepossessing. In place of concrete and understandable numbers, to which we have learned to attach definite meanings, we are confronted with such things as

$$a + b = c.$$

The immediate and natural reaction is like that of the little girl who knew her tables up to twelve times and was asked what was three times thirteen—" Don't be silly. It doesn't exist." The writer's earliest recollection of algebra was precisely like that, which shows that the matter was not clearly explained to him, or at least not clearly enough. The whole point is that the letters of ordinary algebra are not really being used as letters at all. They are just symbols which stand for numbers, and it so happens that the letters of the alphabet are very convenient symbols to use because they have an agreed shape and known names. In addition, certain other symbols are used which are either a short way of making statements (for instance, the symbol "=" is only a short way of writing " is the same as " or " is equal to ") or else instructions to do certain things with the numbers represented by the letters.

2. Algebra as a generalisation of Arithmetic.

Bearing in mind the real character of the letter symbols used in algebra, we can understand this statement taken from Chrystal's text-book. " Ordinary algebra is simply the general theory of those operations with quantity of which the operations of ordinary arithmetic are a particular case. The fundamental laws of this algebra are therefore to be sought for in ordinary arithmetic." This, then, let us proceed to do.

3. The Fundamental Laws of Algebra.

(A) *Addition.*

What do we really mean by the addition of two numbers in ordinary arithmetic? It is a fascinating subject, and one is tempted to digress. Briefly—a number is a group of ones that we know by name. Adding two numbers means finding the name of the group which contains as many ones as the two groups put together. Thus we know (by memory now, but originally by trial with fingers or beans) that the group two combined with the group three has the same number of ones as the group that we have agreed to call five. (There is no special magic about the name five. If we had called it John, then John would be the group containing as many ones as we have fingers on one hand.)

The above example is an ideal case, concerned with pure numbers. In fact, some will call it metaphysical, but that will not make it any less important to understand it, nor any harder to understand. In practice, however, we shall not be concerned with pure numbers but with numbers of things—volts, amperes, pounds, shillings and pence, cabbages or kings—and here we come to one of the most important rules in the whole of mathematics.

Things can only be added together in the arithmetical sense if they are things of the same kind.

For instance, three apples can be added to two apples, and the resulting group can be called five apples. But can three apples be added to two oranges? Yes, in the sense that they can all be put into the same dish, but the number five cannot be attached to the group—unless indeed you call them five fruits, but then you are obeying the general rule, for you have obliterated the distinction between the two kinds of things, and have really added three fruits to two fruits; in other words, the things have been regarded as of the same kind. But obviously this can only be done if the distinction between the two kinds is unimportant for the purpose in mind, and in wireless problems this never happens.

The above is the essence of what is known by the rather impressive title of " The Theory of Dimensions." It will be considered more fully later on, but for the

Digitized by Google

present it will be enough to realise that if the working out of a given problem in wireless leads to the conclusion

$$L+R=10 \text{ ohms},$$

where L means some number of microhenries and R means some number of ohms, then the result is wrong without any further consideration, because it adds together two numbers of things of different kinds and calls the result a single number of one of the kinds.

Now we can go on to the finding out of the generalised rules of arithmetical addition, and the easiest way will be to fix on some one particular kind of thing that we can make a picture of either mentally or actually. Then, on the understanding that all our numbers, or symbols standing for numbers, mean numbers of this particular thing, we shall be obeying the fundamental rule about addition, and the conclusions arrived at will apply generally to any form of arithmetical addition. A convenient thing to choose will be a travel or a journey of, say, one inch in some definite direction, this direction being from left to right parallel to the bottom edge of the page. This may seem a curious thing to choose, but it will be found later that it is very suitable for finding out the rules about subtraction also, which are not so easy to understand as those of addition.

Any number, say, three, of these things will mean three journeys of one inch added together, and since the adding of two journeys means starting the second from the finishing point of the first, this will be the same as a journey of three inches in the given direction. In general any number a will mean a journey of a inches in the given direction (Fig. 1). Suppose now that the journey a is carried out in two stages, first a journey b and then a journey c, as shown in the upper part of Fig. 2. Then a can be described as the result of adding the journey c to the journey b, *i.e.*,

$$a=b+c.$$

Further, it is clear that it does not matter which of the two journeys b or c is made first (lower part of Fig. 2), so that

$$a=b+c=c+b.$$

In the same way it will be just as easy to show that

$$\begin{aligned} b+c+d &= b+d+c \\ &= c+b+d \\ &= d+c+b, \text{ etc., etc.,} \end{aligned}$$

d being another journey of d inches added to the other two. The same idea could be extended to any number of journeys without alteration and we thus arrive at the second general rule about addition.

A succession of additions will lead to the same result whatever the order in which they are carried out.

(A.1.) *The Use of Brackets.*

Returning to the statement

$$a=b+c,$$

this expresses the idea that the two journeys b and c can be considered as a single journey. Similarly, any number of journeys b, c, d, e, etc., can if desired be associated together and considered to be a single journey

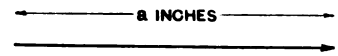

Fig. 1. *Representing the number* a *by a journey of* a *inches in a horizontal direction to the* right.

$b+c+d+e+$etc. Or, again, two of these journeys can be considered as a single journey, if that is convenient for some particular purpose, leaving the others as separate journeys. When it is desired to consider any particular group of journeys (or numbers) as a single thing, that group can be enclosed between two brackets thus $(c+d)$, and that

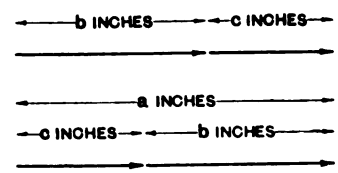

Fig. 2. *Showing that a journey* a *can be made up of journey* b *and then journey* c, *or journey* c *first and then journey* b.

means that we will take this as a whole, without regard to the fact that it is actually made up of two parts. Thus the compound group of numbers a, b, c, d can be written in the form

$$a+b+c+d$$

or in the form

$$a+b+(c+d),$$

the c and d numbers being, so to speak, wrapped up into a single brown paper parcel. This is called the Law of Association for addition, though it is certainly very

Digitized by Google

difficult to see why it should be called a law at all, any more than the wrapping up of things in a brown paper parcel should be called the Law of Brown Paper. However, the idea of associating certain sets of numbers together by means of brackets is a useful one in practice.*

(A.2.) *The Addition of Double Groups.*

Before leaving this subject of addition it may be as well to return for a moment to our three apples and two oranges, because they can be used to illustrate a very important extension of the idea of addition, one which will prove useful in connection with alternating current circuits.

It has been shown that the group three apples plus two oranges cannot be expressed in any simpler form, since the two parts of the group cannot be combined in the sense of arithmetical addition. Two such double groups can be so combined, however. For instance, three apples plus two oranges combined with four apples plus six oranges can obviously be expressed as one double group, seven apples plus eight oranges, *i.e.*, the two sets of apples can be added and the two sets of oranges can be added. To generalise this idea, suppose the letters a, b, c, etc., to represent numbers of apples, and the Greek letters α, β, γ, etc., to represent numbers of oranges, and suppose that the working out of a problem concerned with these double groups of apples and oranges leads to the statement

$$a+\alpha+b+c+\beta+\gamma=d+\delta$$

Then the number d on the right-hand side must be the result of adding together all the apples on the left-hand side, and similarly the number δ must represent all the oranges on the left-hand side. The statement is therefore equivalent to two separate statements

$$a+b+c=d$$
$$\alpha+\beta+\gamma=\delta$$

If this simple idea is thoroughly assimilated, the reader will find that he has got a firm footing in Vector Analysis.

(B) *Subtraction. The Meaning and Use of the Negative Sign.*

The idea of subtraction in the ordinary arithmetical sense is one with life which makes us almost painfully familiar. Returning to the ideal case, we know (by memory) that if two ones are subtracted or removed from a group of five ones, then what remains is the group that we have agreed to call three, and if the ones are, say, pounds, then our understanding of the process is intensified in some cases by its emotional associations. For a child, actually carrying out the process with fingers or beans, the matter ends quite definitely when all the five ones have been subtracted, and if he is asked to take away any more after that he will say, quite rightly, "It can't be done." Later on, however, he will be forced to acquire the idea of a negative number when he finds that seven pounds have been subtracted from his five pounds, leaving him with a debt of two pounds. Mathematically speaking he would now be said to possess minus two (—2) pounds, and assuming him to be an honest man, he will realise that if later on he earns two more pounds, these must be set against his debt of two pounds, leaving him the possessor of exactly nothing. Expressing this mathematically,

$$-2+2=0$$

and since this is true whatever the magnitude of the debt and of the equal amount that has to be earned to set against it,

$$-a+a=0$$

where a means any number.

This statement is the most general way of saying what is meant by the negative number $-a$. It is that number which, when added to or combined with the positive number a makes the total result nothing. The actual or practical meaning of the negative number $-a$ will therefore depend on, will in fact be in the sense indicated above, the reverse of, the meaning that we attach to the positive number a.

The form of expression should be noticed carefully. The word "subtraction" does not come into it. We are actually going to deal with subtraction, but it will be found that when this operation is given the wider sense that it has in algebra it will be much clearer and more convenient to think of it as the combination or addition of positive and negative numbers.

What is the meaning of the negative number $-a$ in terms of the things or units that were used in finding out the rules about

* The associative law for addition is usually expressed: $a+(b+c)=(a+b)+c$.

Digitized by Google

addition? The positive number a was shown to represent a journey of a inches to the right, and the negative number $-a$ is such that

$$-a+a=0.$$

In other words, adding the number a to the

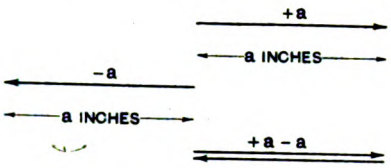

Fig. 3. *Showing how the number* —a *is represented by a journey of* a *inches in a horizontal direction to the* left.

negative number $-a$ cancels the effect of the negative number, *i.e.*, brings us back to the starting point. This becomes quite intelligible if the negative number $-a$ means a journey of a inches to the left. In fact this is the only way to make in intelligibly consistent with the given meaning of $+a$. (See Fig. 3.) One of the most important rules of the negative sign now becomes clear. Applying the negative sign to the number a reverses the direction of the journey of a inches which this number represents. Applying the negative sign to the number $-a$ will therefore reverse it again, which brings it back to its original direction, *i.e.*,

$$--a=+a.$$

Putting this shortly in words, *minus minus is plus*, and in signs

$$--=+.$$

Here we have a familiar acquaintance in academic dress, the familiar acquaintance being the phrase, "Two negatives make an affirmative."

(*To be continued.*)

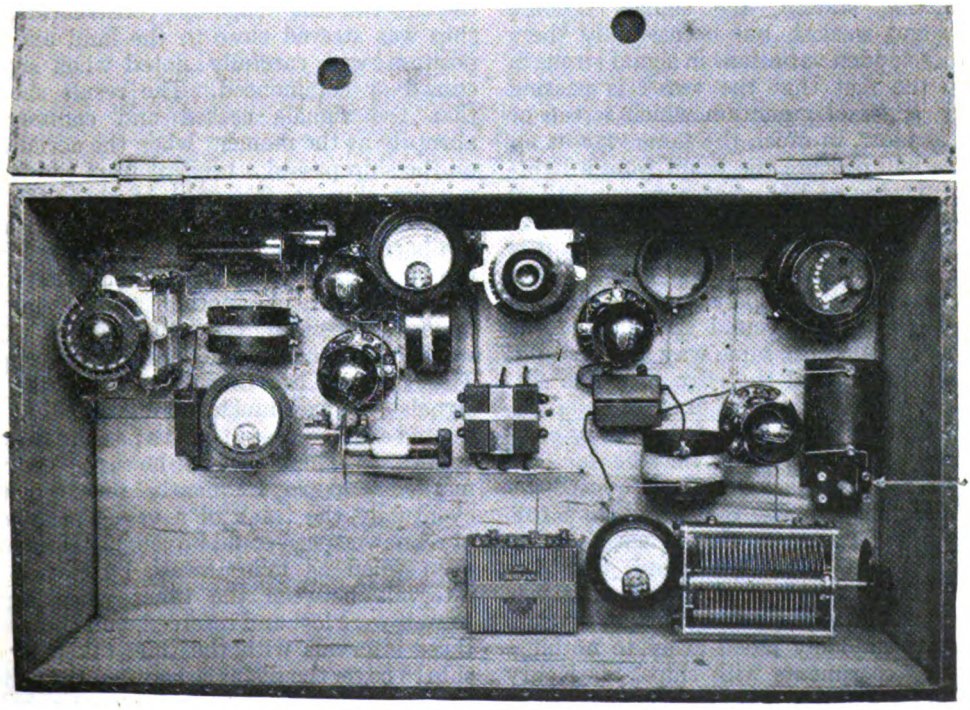

The photograph shows an American crystal controlled transmitting set. The master oscillator (driven by the crystal) operates at 209.4 metres, and the fifth harmonic (41.88 metres) of this is amplified in succeeding valves until the desired output is obtained.

Digitized by Google

Fading. [R113.1

A Lecture delivered by Prof. E. W. MARCHANT, D.Sc., before the Radio Society of Great Britain, on 24th March, 1926.

THE phenomenon of "Fading" of strength of wireless signals is familiar to most of those who use wireless sets, particularly to those who have tried to listen over long distances. These variations are due to very varied causes. A good many of the so-called fading effects are really due to variations in the receiving set itself. The batteries supplying the filaments of the valve, for example, begin to lose their charge, or the high tension battery may run down, or there may be a bad contact at some point of the set. I intend to speak this evening about the actual reduction in strength of the received signal due to causes outside the control of the receiving apparatus. The fading of signal strength at sea, as a ship is travelling over the ocean, has been observed frequently; as the boat sails away from the transmitting station, the signals become weaker and weaker, but occasionally there are quite sudden variations in signal strength due to the fact that the vessel is passing behind ranges of mountain which screen or cast a shadow, in much the same way as an obstacle will obscure the beam from a lighthouse. Owing to the greater wavelength of wireless messages, the shadow that is cast by any obstacle is much less sharp than it is with a beam of light. The phenomenon of diffraction comes into play, and the beam of wireless waves gets round the edge of the obstacle in much the same way as a beam of light will get round the edge of a fine slit. There have been a number of cases observed, in which the signals have faded away comparatively suddenly. This may be due to a mountainous island. One case quoted by Dr. Eccles, in a voyage that he made across the Pacific Ocean, was that when the ship passed behind such an island that lay directly in the path of the beam that was coming from a wireless transmitting station, the signal suddenly faded away to nothing. In some experiments with ships, Sir Henry Jackson showed that soft sandstone and shale cliffs produce relatively little effect, the amount of absorption when the signals passed over land of this kind being such that about 80 per cent. of the distance is covered as compared with the signals passed over the sea. With limestone containing a large proportion of iron ores, the signal strength was very much reduced, the distance covered when the signal passed over land of this kind being less than 40 per cent., and in some cases as low as 20 per cent. of the distance that the same signal would pass over the sea. He mentions one case of considerable interest. The ship which was making the test was sailed close to an island of a wedge shape with a very steep cliff, the pinnacle of rock being extremely precipitous and jutting out from the mainland and rising abruptly out of the sea, so that the ship could pass close to it in perfect safety at a distance of about 100 yards. To ascertain the effect of this wedge-like construction, the ship was steered close to the land and the position was carefully noted when signals ceased or commenced. The result showed that the signals ceased and commenced abruptly at the moment when the aerial wire on the ship passed a tangent from the transmitting ship to the edge of the cliff, the action being exceedingly abrupt; at one transit, the part of the long dash in the letter F was the first indication of signals that was received, and in another transit in the opposite direction, the long dash of the F was the last received, the short being dropped. These results are unusual; as a rule the signals die away much more gradually. He quoted another case of waves passing through valleys. "These effects," he says, "were so marked and so frequently repeated that eventually the track of a vessel proceeding at a known speed could be roughly estimated, even when 25 miles away, by noting the intervals between the times when signals from it were lost and received, and comparing these intervals with the time taken by the ship to cover the distance between the valleys, through which the waves can evidently find their way with less obstruction than by any other route." He summarised the screening

Digitized by Google

effect of rocks as being greatest with limestone containing iron ores, next with hard limestone and least with soft rocks.

Screening due to rocks has been observed in the neighbourhood of Grenoble, and is due to the nature of the country. In this district there are very deep valleys of limestone and other rocks, and the broadcast messages are sometimes difficult to pick up on aerials at the bottoms of these valleys. A similar kind of effect is observed with the Cardiff broadcasting station. This station is near the sea and behind it is a steep cliff. It is the experience, I think, of most people in Liverpool that Cardiff is one of the most difficult broadcasting stations to pick up, although actually it is not so far away as London and Bournemouth. Variations in signal strength (due to this kind of absorption) are, of course, not observed with fixed transmitting and receiving stations, but the phenomena are of interest, in so far as they explain the variation in strength that are observed with broadcast stations in different districts. The difference in the reception of two such stations may often be explained by obstructions that occur between the transmitting and receiving stations. For some reason Toulouse is very well received in this district, whereas Newcastle, as a rule, is not, and this, I think, is very largely due to the nature of the intervening land in the two cases.

It has been suggested that the fading of signal strength is due to weather conditions; although a great many measurements have been made at different times of the variations in the strength of wireless signals, there is no convincing evidence of any close relation between the state of the weather and signal strength. The only definite evidence of any such relation that I have observed, has been with signals coming over considerable distances at night, in which it appeared on several occasions, that the signal was considerably increased in strength after heavy rain. It seems as if the falling rain has "cleared the air" for the radio signals, in much the same way as a shower of rain will clear the air of dust or fog which obscures light waves, but there is hardly sufficient evidence to justify a generalisation on this point. When one deals with signals from longer distances, such as between this country and America, fading, as it is ordinarily understood, is much more marked. On some evenings, especially in winter, it is possible to hear American broadcasting stations quite clearly with an ordinary two-valve or three-valve receiver. This is not due to any remarkable qualities of the receiver, but is due to the fact that on these evenings the wireless atmosphere between this country and America is clear, and the waves come over at quite considerable strength. Some days they will be quite strong; the next day, when conditions appear to be very similar, the signal may be relatively weak, and this is more marked on broadcast wavelengths than it is on the longer wavelengths that are used for commercial transmission. If one is listening to such broadcast reception, the strength of the message may vary within wide limits, at one instant it will be quite strong, at another instant it will fade away to nothing, and sometimes this "fading" goes on continuously. The effect is something like what one observes occasionally with sound. A bell is tolling in a church tower, in the distance; at one instant, one hears the sound quite clearly, the next instant it fades away and then it comes on quite strongly again. In the case of a bell this effect is generally due to variations in homogeneity of the atmosphere, and the cause of wireless fading, although it is over much greater distances, is probably lack of homogeneity of the transmitting medium. The amazing thing about these wireless signals is that they *do* travel over such great distances as between this country and America. If one looks at the map of the world, it is evident that there is a great mountain of water between these two places, round which any beam, which travels in straight lines, could not be expected to pass. It is now generally agreed that they are reflected across these long distances by an upper layer of the atmosphere which acts as a sort of mirror to these rays. This upper layer consists of air at a fairly low pressure. When the pressure of air in a vacuum tube is diminished, its conductivity increases, and there is a certain pressure of air which makes the conductivity a maximum. As one goes up into the atmosphere, therefore, and as the pressure of air gradually falls, the conductivity of the air will gradually increase until, at a certain height (it is in the neighbourhood of 80 kilometres) the conductivity of the air reaches a maximum, and has a

Digitized by Google

value approaching that of sea water. Such a layer of air will act as a reflector for electro-magnetic waves of long wavelength, and in dealing with the transmission of signals across the Atlantic, one can regard this upper layer as a mirror against which the waves will strike and be reflected downwards. The simple theory of the mirror can be worked out in just the same way as that of two parallel glass mirrors, but if one assumes a height of the layer of only 80 kilometres, it is not difficult to see that there may be a great many reflections from the surface of the layer and the surface of the sea, before a wave can traverse 3,000 miles across the Atlantic. Although this theory offers an explanation of the transmission it is not a complete explanation.

Dr. Eccles, some years ago now, in studying the passage of electro-magnetic waves through an ionised atmosphere, showed that if the wave travelled through a space in which the ionisation, or conductivity, varied, that the velocity of the waves in the more strongly ionised atmosphere was greater than it was when the atmosphere was weakly ionised. In considering fading, therefore, which is intimately bound up with the action of the Heaviside layer, we shall have to think about ionisation. The ionisation of the ordinary atmosphere is brought about through the agency of sunlight. When sunlight containing ultra violet light passes through air, it renders it conducting—in other words, it ionises it. When the light wave strikes the molecules some of them split into positive and negative ions and these ions will float about in free space, travelling sometimes over considerable orbits, in much the same way as a cloud of dust or fog in the atmosphere. If a positive ion strikes a negative ion it will combine with it to form an uncharged molecule, and if the ultra-violet light ceases, the ionisation will rapidly disappear and the positive and negative ions combine with each other and form a neutral atmosphere once more. The negative ions are more mobile as a rule than the positive ions. Although, perhaps, it is a little difficult to appreciate the exact mechanism of the transference of an electro-magnetic wave through an ionised space, one may gain some conception of it by imagining that when the electro-magnetic wave passes through the ionised atmosphere, the ions allow the electric force to operate more quickly and so permit the wave to travel with greater velocity. If one considers the nature of the ionisation of the atmosphere, this ionisation will be stronger in the upper regions than it is lower down, the ionisation, I have already explained, depends on the amount of ultra-violet light that there is in the atmosphere and the further one comes towards the surface of the earth, the less strongly ionised the atmosphere will be. It follows, therefore, that a ray starting out from a transmitter that is going into the upper regions of the atmosphere, will be bent round gradually, owing to the fact that the rays that are travelling along the upper regions of the atmosphere will go faster than those that are going along the surface, and if the ionisation of the atmosphere varies, the wave front may be bent so as to travel along an arc of the earth's surface instead of in a straight line. In long distance transmission it has been shown that the attenuation or dying away of the waves depends far more on the upper layers of the atmosphere than it does on the ground.

The strength of the reflected ray, except at night, will be relatively weak over short distances on account of the absorption of the rays by the ionised layer of air in the upper parts of the atmosphere. It is evident from the nature of the transmission that has been outlined above that there is likely to be great variation in the conditions of signalling and, therefore, that the strength of the signal that is received is likely to vary within wide limits. The upper atmosphere may possible be less liable to rapid variations in form than the lower atmosphere, as the upper atmosphere is farther from the irregularities on the earth's surface. At the same time, it is difficult to believe that the conditions in the upper atmosphere are quite constant. One has only to look at the sky on a windy day to realise how rapidly the conditions, even at a height of several miles, are varying. It is, therefore, extremely unlikely, that even at very high altitudes, the ionic conditions in the upper regions of the atmosphere will be so constant that the refractions and reflections which are necessary if signals of appreciable strength are to be received, will remain absolutely constant, and with these facts in one's mind, it is not at all difficult to explain the variations when American broadcast, for example, is being

Digitized by Google

received. The remarkable thing about these receptions is that they are as constant as they have actually proved to be. Sometimes during the winter, American reception may remain almost as constant for an hour or two as reception from a broadcast station, say in Manchester, but on the other hand, it may vary within wide limits in a few minutes. One can imagine the swirling masses or clouds of ionised air which are responsible for these variations in signal strength. The most astonishing fact that has come out during the last two or three years has been the wonderful ranges that have been obtained with short waves. A number of tests made by Austin, the head of the Washington Radio Research Department, some years ago, led to the establishment of what is called the Austin-Cohen formula, by which the strength of the electric wave that was received at any distance from a transmitting station could be estimated. The strength of the electric wave is measured in terms of the electric field that is produced at the receiving station by the wave, in microvolts per metre on the receiving aerial. In the Austin-Cohen formula, a factor was introduced which takes account of absorption. This factor was of the form $\varepsilon^{-\frac{a\,d}{\sqrt{\lambda}}}$. The value of a has been determined by a great many experimenters. The figure for a that is usually taken is 0.002, d and λ being measured in kilometres, but it varies in different parts of the world. Now it will be seen in this formula that the greater the distance, the more the wave will be absorbed, that is, the larger becomes the value of the absorption factor. This, of course, is as one would expect, because the longer the path through the absorbing medium, the greater the amount of absorption will be, but the absorption is not simply proportional to the distance, it is proportional to the exponential ε raised to a power which depends on the distance, d, so that the absorption at a distance $2d$ will be more than twice as great as it would be at half the distance, the relative amount of absorption for the two distances depending on the value of the absorption factor. It is also evident that the absorption will be greater with shorter wavelengths, for example, if one has, say, to transmit over a distance of 1,000 kms. and $\lambda = 4$ kms., the absorption factor will be proportional to $\varepsilon^{-500a} = \varepsilon^{-1}$, if $a = 0.002$, and it is evident from this formula that if you take a distance of 2,000 kms. and a wavelength of 16 kms. that you will get exactly the same amount of absorption. The formula, in other words, indicates that the longer the wave, the more suitable it is for long distance transmission. From this formula it would appear that to try and use short waves for long distances was hopeless: for example, if one were to reduce λ to, say, 10 metres, that is 0.01 of a kilometre, instead of using $\lambda = 4$ kms., the absorption factor would be increased to $\varepsilon^{-10{,}000a} = \varepsilon^{-20}$ and the strength of the received wave $= 5/10^8$ of its unabsorbed value over a distance of 1,000 kms. instead of 1/2.7, which would be the value for the longer wavelength. To the surprise of everyone, it was found that when using wavelengths of 100 metres or less, it was possible to hear speech right across the Atlantic. I believe the first person who ever heard speech across the Atlantic was a man in Aberdeen, who heard a telephone message which was being broadcasted from some station in New York.

A good many people doubted the accuracy of his observation, but since then, during the winter months of 1924-25, a great many radio observers listened to broadcasts that came direct from America, and as you all know, the B.B.C. have actually transmitted from their broadcasting stations some of the music that has come right over the Atlantic on these short wavelengths. That was, of course, a very surprising result and indicated that the Austin-Cohen formula had very rigid limitations, in fact that it was only applicable with long wavelengths of the order of kilometres and upwards; but what is perhaps the most surprising result of all is the discovery which was primarily due to amateurs, who had been relegated to wavelengths from 100 metres downwards, that with wavelengths of only 10 to 30 metres, extraordinarily long ranges can be obtained.

It has been shown that it is possible to transmit messages all over the world on relatively small powers with short waves. These signals are, however, liable to very wide fluctuations in strength; "fading," in other words, is very marked. There has been very little information published as to the variations in signal strength between this country and America, with the short waves that are to be used in the beam system of

Digitized by Google

transmission, but there seems no doubt that the range of variation is much wider than it is with longer waves. In American transmissions, it is not unusual to get variations in strength of the order of 20 : 1 on different days, and for shorter waves the range of variation is probably several hundred to one. One of the most interesting cases of fading is due to interference between the waves which are reflected from the Heaviside layer and those that travel direct over the surface of the ground.

In some experiments made last January (1925) by Appleton, the cause of fading was investigated in a very interesting way. The experiments were made at Cambridge, which is about 50 miles from London. It had been noticed on many occasions that the broadcast signals received from 2LO varied a good deal after sunset. These variations were not very large, about 5 per cent. or thereabout, but they were nearly always present. Now it may easily be seen that if these variations are due to a reflected ray from the Heaviside layer arriving at the receiving station at a sharp angle with the earth's surface, that the variations observed on a vertical wire will depend on the angle at which the waves come down.

There will be a combination of two waves, one coming direct, which can be called $E \sin \omega t$, and the other one coming in at an angle ϕ which will be given by $e \sin (\omega t - \theta) \cos \phi$.

The sum of these will give a resultant measured current in the aerial which will be the mean value of $[E \sin \omega t + e \sin (\omega t - \theta) \cos \phi]^2$. This gives $E^2 + 2Ee \cos \phi \cos \theta + e^2 \cos^2 \phi$.

Since e is very small compared with E the variations may be represented by $2Ee \cos \phi \cos \theta$.

If $\theta = 0$ or $n\pi$, the variations will be a maximum, but the actual variation will vary according to the difference in length of the two paths. The ray will be reflected from the earth on which it strikes and the variation in signal due to the reflected ray will be double that due to the incident ray. The variation in strength of the wave will, therefore, be $\pm 4Ee \cos \phi \cos \theta$.

Now, if the signals are observed, not by an aerial, but by a loop in the plane of the incoming wave, the magnetic field due to the direct ray may be represented by $H \sin \omega t$ and that due to the reflected ray by $h (\sin \omega t - \phi)$. The resultant effect on the loop will, therefore, be proportional to $H^2 + 2hH \cos \theta$ or allowing for reflection from the earth's surface, the actual variation will be $4hH \cos \theta$. If the two circuits connected to the loop and the aerial are so adjusted as to give the same strength of signal on a receiver containing a galvanometer, the variation in galvanometer deflection with the aerial and loop respectively may be used to determine the angle at which the reflected ray strikes the earth. The ratio between the variation with the loop and with the aerial was carefully observed; it varied within wide limits, but the greatest number of observations gave as the value of the ratio, Loop : Aerial = 2.6. This gives a value of the angle between 60° and 70°.

Knowing the distance between the two stations a calculation can easily be made of the height at which reflection takes place and this comes to about 80 km., a height which agrees fairly closely with the value estimated by atmospheric conditions. Professor Appleton has gone a step further, and from the extent of the variations has made an approximate estimate of the reflection coefficient or the ratio of the strength of the reflected ray to the incident ray, and finds that it varies between 2 per cent. and 0.07 per cent. With a layer of this kind of varying nature, it is to be expected that there will be quite large variations in the reflecting power of the layer. The bending or refraction by the layer is brought about by the ionisation of the atmosphere, the more strongly the layer is ionised, the more the rays are refracted, the actual path of the ray through the lower ranges of the layer being curved; where the air is only slightly ionised the coefficient of refraction is relatively small; the higher up one goes the more strongly is the air ionised and the greater the coefficient of refraction becomes, until a point is reached where the ray travels parallel to the surface and is then gradually bent down once more.

These results were confirmed by some experiments that were made between Bournemouth and Oxford. The wavelength of the station at Bournemouth was varied continuously between limits of 385 and 392 metres. If one assumes there is a reflecting layer at a height of 80 kilometres, it may

Digitized by Google

be shown that there will be four minima at a particular point due to interference. This was the extent of the variation that was actually observed. In another test the wavelength was changed from 385 to 395 metres, the average number of maxima and minima observed was 7, which again corresponds with the same height of layer.

It is interesting to note that subsidiary maxima and minima were noted on the galvanometer while these changes were going on, which appears to indicate that there may be multiple reflections, that is, that the ray between the transmitter and the receiver may be reflected, first from the Heaviside layer, then upwards from the ground, and then down again by the Heaviside layer. The number of fringes that would be produced by changing the frequency over a given range would be approximately twice as great as it would be with one reflection.

Quite recently, Mr. Hollingworth, who is working in connection with the Radio Research Board, has been able to trace out interference bands (due to the St. Assise station working on wavelengths of about 14,000 metres) in going from the South of England to the North. If one considers the signal received at any point A on the earth's surface, from a transmitting station T, it is easy to see that there will be a series of points A_1, A_2, A_3, at which the difference in path by way of the Heaviside layer to that going direct along the earth's surface will be a half wavelength, or an odd multiple of half wavelengths. It is easy to work out the distance between these points if one knows the height at which the reflecting layer is, or *vice versa*.

Mr. Hollingworth made a number of tests with a portable receiver with which he was able to measure the strength of signal received at different points. He made a motor tour from London to Aberdeen, making measurements at various points on the way, these measurements being taken in the summer when daylight conditions are steadier than they are in winter, and it was possible to obtain a record of maxima and minima. These results were published before the Wireless Section of the Institution of Electrical Engineers about six weeks ago. He found that at a distance of 400 kilometres there was a definite maximum in the signals from St. Assise, and at a distance of about 700 kilometres, that is, in the neighbourhood of Manchester, there was a definite minimum, and at Aberdeen the signals were about twice as strong as they were at Manchester. It is easy from these results to estimate the height at which the Heaviside layer should be, and it is estimated from these results to be about 70 kilometres.

Another observation which is of considerable interest is the variation after sunset. As a rule, signals will increase in strength immediately after sunset and then vary throughout the night within fairly wide limits. In some of the observation stations of the Radio Research Board, it was found that the signals immediately after sunset diminished appreciably in strength, then rose again until the night strength was very nearly equal to the day strength. One can easily explain these results by imagining that, as daylight passes, the height of the Heaviside layer is gradually raised. The state of ionisation of the atmosphere will clearly vary from day to night, the air being ionised at lower levels in the day time than it is at night, and observed results are quite consistent with this theory. In some experiments made in Liverpool many years ago, we found that the sunset effect was not by any means constant. On some days there was a very considerable increase in signal strength after sunset, on others, there was little or no variation, and it was noticed that the sunset effect was different in different places. All these effects are explained if the sunset effect is due to interference, and the variations observed *may* be due to the alteration in the height of the reflecting layer.

It is sometimes observed that very small variations in the length of the wave given out from a transmitting station produce large changes in the strength of signal at a given place (a phenomenon which has been used by Appleton in the experiments already described), for example, if any point corresponds with a dark patch for one wavelength it would not correspond with a dark patch for a slightly different wavelength, and when there is interference, there may be large variations in signal strength for relatively small variations in wavelength. This phenomen was noted many years ago with the transatlantic signals, it was found that towards sunset

Digitized by Google

signals became very weak on one wavelength but much stronger on a slightly different wavelength, and after sunrise, the two wavelengths produced opposite results, that is, the wavelength that had given a weak signal now gave a strong signal and *vice versa*.

In a paper by the author before the Radio Society of New York, published in 1915, this question was dealt with at some length and theory of interference bands due to multiple reflections worked out.

Another effect that is produced by reflection from the Heaviside layer is that the polarisation of the wave may be altered. Those of you who are familiar with polarisation of light know that when plane polarised light is reflected from a magnetised surface the plane of polarisation may be rotated, and the same thing seems to occur with the light that is reflected from the Heaviside layer, with the result that the resultant beam that is observed on the earth's surface is elliptically polarised. Some most interesting results on this subject, that have been published recently, are included in a paper that was read by Captain Round and his colleagues before the Institution of Electrical Engineers last October. These investigators set out in the steamship *Dorset* and sailed to New Zealand and Australia *via* the Panama Canal, observing the variation in signal strength all the way. When they reached Australia, they made a number of observations outside Melbourne at a place called Kooweerup. When one is nearly on the other side of the world, the signals from a transmitting station may go round in either direction, and the direction in which one receives them depends on how much of the path along which they travel is in the dark or in the light. Signals travel most easily in the dark and, therefore, when the dark part of the earth's surface is between the transmitting station and the receiving station, the signals would go along it. Twelve hours later, when the part of the earth's surface which was dark has become light, the signals will come the other way round. For instance, in Australia these observers found that when the dark shadow over the earth lays between Melbourne and England, and included Africa and India, that signals from the Eiffel Tower appeared to come from the north-west; twelve hours later, when the dark shadow over the earth was on the opposite side of the hemisphere, they came from the south-east. At the time when the amount of darkness along both paths was the same, there was sometimes interference and large variation in signal strength due to the two signals coming opposite ways round the world not arriving in exactly the same phase. It is evident that if there are very slight variations in frequency of the emitted signals, there is liable to be a large fluctuation in the signal strength due to these interferences. As was recently mentioned in the description of the Rugby Station, the frequency at which the signals are sent out is maintained by a tuning fork and, therefore, variation in frequency of the emitted waves is likely to be negligible. This should prove most advantageous when listening to signals on the other side of the world.

The most remarkable changes in strength of signal occur at periods round about sunset and sunrise at the transmitting and receiving stations. In some of the figures given by Captain Round observed at Kooweerup, the signal increased from a very small amount, less than 10 microvolts per metre, up to as much as 140 microvolts per metre, at the time when there was sunrise at Melbourne and just after sunset at Carnarvon. In some of these observations, the signal strength decreased from 150 microvolts per metre down to 40 microvolts per metre in a period of less than twenty minutes, which will, of course, give a very big fading effect. From the point of view of broadcast reception, fading is a thing to be avoided, but, as I have said, it is quite beyond the power either of the transmitting station or the receiving station to get rid of it. I hope, therefore, that those of you who have been listening to American broadcasts, and to the broadcasts that have been relayed from various parts of Europe, will feel a little more sympathetic to the B.B.C. than perhaps you have been apt to do when the transmissions are very bad. It is a practical impossibility to obtain absolutely uniform transmission over very long distances, and nothing which either the transmitter or the receiver will do, can get rid of these variations.

DISCUSSION.

Admiral Sir Henry Jackson, F.R.S.: I have much pleasure in moving a vote of thanks to Professor Marchant for his very interesting lecture. He has described a very difficult subject in a manner

Digitized by Google

clear and easy to understand, and he has dealt with it in a very short time. I think, as he says, these effects are recognised by practically all authorities as being chiefly due to deflection by the upper layer of the atmosphere. He mentioned my name as one who had delivered a lecture on some fading effects due to intervening land. It was a long time ago, and I had forgotten the paper, but I believe it has stood the test of time. I see that in America some experiments have recently been made which showed that the effect of intervening land on broadcasting results was very marked indeed. Professor Marchant has not touched on the short wave fading, so noticeable when receiving these from long distances. This may be attributed to the same cause, but the mechanism by which it is effected at great heights is a little difficult to understand. I have been doing work during the last few months observing three stations with similar wavelengths, power and operators. The results were certainly interesting as showing the effect of distance on fading effects of short waves. No doubt the fading does get worse as the distances increase; though I get it both in daylight and dark, at 70 miles, 1,200 miles and up to 6,000 miles. In the programme I have been listening to, the three stations follow one another very regularly according to a fixed programme, and very often I have noticed that when one station 5,000 miles away is clear the other two stations fade, but in other cases it is not so. Half an hour before I came here I was listening to two stations of exactly the same wavelength and power. One, a fixed station, 1,200 miles away, showed no fading whatever. When it was finished I listened to the other station which was a ship about the same distance and power, and the fading was very bad indeed. The speed of words per minute was about the same. The fixed station was not fading, every dot was as clear as possible; but from the ship station about two-thirds of the dots were not audible at all, and the others were very faint. This fading of dots is rather difficult to account for; is it due to the fact that it takes an appreciable time for the power to get through? It looks like that, and I wonder if the commercial stations using these short waves find that difficulty, that their dots are missed and their automatic receiving tapes spoiled by it. It would be very interesting to know. Another effect is that the stations make long dashes to finish up signals. I have heard those long dashes with an audible note rising and falling in different pitch and strength. At other times the fading has a long period of perhaps a minute, with another period of five or ten seconds superposed on it. It would be very interesting to see how the mechanism of this upper layer can be worked out to meet these peculiar cases. We are very much indebted to Professor Marchant for bringing this subject clearly before us. (Applause.)

Dr. W. H. Eccles, F.R.S.: The subject that Professor Marchant has been treating is an enormous one. The accumulated information and the number of observations are so massive that we are very grateful to anyone who will, as Professor Marchant has done, try and trace some path through the subject that will enable us to understand it better. I think the burden of Professor Marchant's address is that most or all fading is due to the Heaviside layer. I think it would be helpful if I were to point out that there are other possible causes. For instance, we all know that the waves are bent round the world by at least three agencies. There is diffraction, which means bending of waves round a corner. Then there is, in the case of electric waves in the air, the effect of diminution of density upwards. Therefore the specific inductive capacity decreases and the velocity of the waves increases with height, with the result that the wave front tilts forward as it goes over the face of the earth. There is, besides, the influence of water vapour which has been shown to have a considerable effect when distances of hundreds of miles are concerned. It seems to me possible that a great deal of fading is due to the action of water vapour or of alterations of air density at fairly low levels. An explanation of fading on that ground would resemble the explanation of the quivering of objects seen by rays of light passing over the top of a chimney where a fire is burning. These rays of light have to pass through air whose refractive index is slightly different from that of the air around it. Moreover that air is quivering, and the consequence is that objects seen through such a patch of hot air seem to be shaking. A good deal of the ordinary fading such as bothers the broadcasting listener may be due to the operation of similar causes. As regards the effect of water vapour, I think there is no doubt that the presence of clouds, or the occurrence of a thunderstorm that removes water vapour by making the rain fall, have their effects on signals; and I know quite well, by my own observations in the tropics, that the presence of cyclones or hurricanes between the transmitting station and the receiving station has great effect on signals. It is not likely that a cyclone will extend to a greater height in the atmosphere than, say, eight miles, and therefore it does seem that the lower atmosphere can produce very great changes of signal strength by these variations. I might just mention that it is well known to meteorologists that the atmosphere is rather wobbly, if I may use the expression, at a height of about ten miles, because pilot balloons—the very light balloons which the meteorologists send up in order to observe the upper atmosphere and measure the wind currents there—these balloons at a height of about ten miles, move up and down through some hundreds of yards once every two or three minutes as they travel. That suggests that fading may be due sometimes to actual bodily movement of the layers that are below ten miles in height. When the ionised parts of the atmosphere come into the phenomenon, a third element enters to cause fading, namely, the variability of the amount of ionisation. That is the matter on which Professor Appleton has done such very valuable work, and on which Mr. Hollingworth has made the wonderful deductions described by Professor Marchant. While I was looking at the diagrams from Professor Appleton's paper, thrown on the screen by Professor Marchant, it occurred to me again that perhaps we were taking the Heaviside layer as being too localised. We ought, perhaps, to think of it as more gradual than we do, and instead of drawing, as you see on the board now, a triangle, perhaps we

Digitized by Google

ought to draw a parabolic arch. You could start at the same angle upwards, make a parabolic arch of the same span and descending at the same angle on the other side, without the apex of the arch being as high as the apex of the triangle. If there is much bending in the lower parts of the atmosphere, then the apex is really lower than ninety kilometres; and for a longer wave would be still lower than the height calculated by Mr. Hollingworth. As to all the other points that Professor Marchant has discussed I am in accord with his conclusions, and it would be merely a repetition if I were to say anything about them. I agree very cordially with practically all his views. (Applause.)

Mr. P. R. Coursey, B.Sc.: Mr. Chairman and gentlemen, I am sure we are all very grateful to Professor Marchant for the interesting matter he has brought before us to-night. The many measurements that have been made, amongst those to which he has referred which bear upon the apparent height of this ionised layer, are certainly very interesting, as giving a more or less generally consistent figure between them. In reference to what Dr. Eccles said just now, the figures which have been obtained from different sources, all point to an apparent height of much around about the same figure; and it would appear that the bending to which Dr. Eccles has just referred, would simply reduce the height calculated by an amount which while not constant is nearly so, depending somewhat on the wavelength.

There is perhaps just one point in which Professor Marchant's paper is lacking, if I may be permitted to say so, and that is with regard to the methods by which these observations have been carried out. The only contribution in an experimental way which I have made to the subject, was made several years ago with an Einthoven string galvanometer of the type to which Professor Marchant made reference. That apparatus provides a nice way to carry out readings of this type, but is far too expensive an instrument for most of us; and a simple way of carrying out these measurements would be very desirable if it could be produced—provided the apparatus involved was fairly simple and, what is more important, subject to reasonable calibration and constancy of operation. The use of a valve amplifier and detector with the addition of some means of calibrating the equipment each time a measurement is made, would seem to be the obvious method if properly set up and provided some means of definitely calibrating each time it is used. If Professor Marchant can suggest anything further of this type I am sure it will be a useful addition to the very excellent paper he has already given.

The fading effects due to the reception of two waves, one coming direct from the transmitter and one refracted in the higher levels, seem to be connected very intimately with the distortion of telephonic reception which occurs when receiving at night speech over distances since the telephone modulation itself will introduce variations of frequency at the transmitter. It seems very possible that the same effect may be the basis of the missing of dots to which Admiral Jackson referred just now. Many transmitters, if they are operating with a simple valve oscillator, particularly on short waves, frequently show small changes of wavelength at the moment of switching off and on, and with a dot signal those frequency changes must be a more important proportion of the whole length of the signal than they are when a dash is being transmitted. If then there is any fading effect caused by variations of frequency causing interference of valves at the receiver, it would be possible that those effects would be more important with a short signal like a dot than with a long one. I do not know whether that is what actually happens but it occurs to me that that is the possible cause of the observed effect. The considerable fading noticed with a great many short wave stations is possibly also due to variations of wavelength of similar nature during transmission. Since the majority of these stations are not very rigidly controlled in frequency, and any variations of frequency on short wavelengths must be much more important than with long wavelengths, and if there is any difference in the length of the two paths traversed by the waves, a small change of wavelength must have a very much greater effect as far as interference is concerned. In conclusion, I would repeat that I am sure we are very grateful to Professor Marchant for all the interesting material he has brought before us to-night. (Applause.)

Mr. E. C. Atkinson, M.A.: At least one regular observer of transatlantic messages appears to attribute the variation in signal strength of messages coming across water to variations in barometric conditions over the Atlantic, and he seems to be satisfied that if there is a regular pressure gradient between the receiving station and the transmitting station, the signals are likely to be strong; whereas they are likely to be weak if the barometric pressure is erratic between the two stations. It seems at first sight quite likely that what you may call a ripply atmosphere between the two stations would be a condition for bad reception; but if you are to attribute the reception over long distances to one or, as Professor Marchant points out, possibly more than one reflection from the Heaviside layer, you seem really concerned with the smoothness of the reflecting surface at one or at most two points, and consequently you would expect to have good reception with a steady barometer in one or two places, and be entirely independent of those local depressions which we read about in the papers—generally approaching the British Islands. (Laughter.) I should like to ask Professor Marchant what his views are as to the possible connection between barometric conditions and the periods of good and bad reception of long distance wireless signals.

Mr. H. Bevan Swift, A.M.I.E.E.: Mr. Chairman, I am afraid my remarks will be more from the practical side, because I have not made any theoretical investigation of the subject. Professor Marchant opened his lecture by saying that he could not get Cardiff at Liverpool. Cardiff I think is also the most difficult of the broadcasting stations for us Londoners to get. Some friends of mine at Aberystwyth cannot get Cardiff at all but get London perfectly. I suppose it is the local conditions there which make it so difficult to receive elsewhere. The fading we get seems to be of two

Digitized by Google

kinds, total obscurity and periodic fading. In the case of a house on the Penistone Hills in Yorkshire recently we were listening to London broadcasting at full loud-speaker strength. Seven minutes afterwards it was totally gone. A few minutes afterwards it came up to full loud-speaker strength again. To practical listeners that periodical fading is most troublesome of all. With total obscurity you do not expect anything, but you like continuity if you are listening to a programme at a distance. On a superheterodyne set you do not appear to notice the fading to the same extent; that is possibly due to some peculiar circumstance of the set itself. Distance does not seem to make the great difference in strength to the stations. When listening on the 45-metre band, fading is extremely irritating. On certain nights you cannot get stations, on other nights those stations are quite good; and it is a mysterious thing that if you ever try to carry out a schedule of transmission with anybody, that night invariably he cannot be heard, which is a most awkward circumstance. I was very much interested in a remark by Professor Marchant upon the Heaviside layer not being concentric with the surface of the earth, that is to say that during the night presumably the gap between it and the earth is different from that in the daytime. I would like to know if Professor Marchant can tell us if this is due to the effect of the sun upon the ionisation of the atmosphere which actually lifts the Heaviside layer away. At sunset those peculiar observations, that we have observed on the screen to-night, are very erratic. This might be due to the peculiar cooling of the ionisation of the air with a definite lag of phase, if we might put it that way, due to the rays of the sun going off. I do not know whether there is anything in that idea; perhaps Professor Marchant can tell us. I would like to congratulate him upon his excellent paper. (Applause.)

Mr. C. W. Goyder: May I ask Professor Marchant a question with regard to the way in which waves travel to distant stations. Would not you consider that at 3,000 miles the direct wave would be entirely absent, especially on the short wavelengths of about 45 metres? If you had only a reflected ray arriving at the station 3,000 or 6,000 miles away, surely there would be a great number of paths by which it could arrive; so that the integration of all those paths ought to allow a fairly good signal to be received at the distant end. I do not see why the rays should take just one path; they might take hundreds which would be slightly different in the length and so the average result would be fairly constant. What has surprised me is that although distant amateur signals, and New Zealand signals from 12,000 miles, are quite constant in strength, with KDKA on 63 metres the fading is extremely violent and also the commercial station on 44 metres. I cannot see why fading should be bad at a distance of 3,000 miles when the direct ray is absent. Another thing is that with 45 metres, even at a distance of five miles from the transmitter, fading is very bad at times. Surely the waves could not be reflected down at such a critical angle from the Heaviside layer as to arrive at the earth at a distance of five miles. But at a greater distance than five miles, say 35 miles, on the 45-metre band you do not hear anything at all, practically speaking. It is the well-known skip distance. Further on, at 300 miles, the signals become normal again. I cannot quite see why that should be so. If fading occurs at five miles I do not see why it should not occur right through and beyond the skip distance. With regard to the constancy of frequency and its effect on fading, I think if you use crystal control you can rely on the frequency being constant, and as far as I can find from experiments the distortion of speech is entirely absent when you are using crystal control; as Mr. Coursey mentioned to-night frequency variation would vary the quality of the speech; ever since I have tried the experiment of using crystal control I have never had a report of speech distortion. But the fading has not been affected; it is as bad as ever it was, and does not seem to be affected by frequency. With regard to the barometer, or any weather effect on the signals, for two weeks at a time I have noticed that a five kilowatt station on 45 metres has not been audible at all. No signals at all. Yet one night it goes up to its normal strength, R8, in the ordinary code, without any change in the weather. Another day it dies away to inaudibility. Surely these changes are too rapid to be accounted for by the weather. I wonder if there is any simple explanation of this! (Applause.)

Mr. G. P. Nicholson: One possible experiment occurred to me while Professor Marchant was speaking about the Heaviside layer—if it is as sharp as the picture on the board indicates. A short wireless wave transmitted from a Hertz dipole is plane polarised. That is the vibrations of the electric field are in one plane only, and those of the magnetic field in another plane at right angles to the first. Now it is known that if light is incident upon a reflecting surface at a certain angle it will be largely reflected if polarised in one plane, but mostly transmitted if polarised in the plane at right angles. I should like to know whether any experiment has been made which bears on this point. It appears that rays from a vertical dipole are actually reflected from the Heaviside layer. It might occur that rays from a horizontal dipole using a parabolic reflector with its axis horizontal might not be so reflected, if they were directed so as to strike the layer at the correct angle. I should like to know whether Professor Marchant knows of any such experiment.

Brig.-General Sir H. C. L. Holden, K.C.B., F.R.S. (*Chairman*): If no one else wishes to speak I would like to make a remark or so myself. I am afraid I cannot add very much to the discussion, and I feel rather diffident about speaking at all, because I feel that if I ask the few questions that I want to, I shall be more or less overwhelming the lecturer, because he has already a number of points to answer. The first thing I should like to ask is whether any information has been obtained from the experiments that have been made by, I think, one or two Polar expeditions that have been made during the last eighteen months or two years. The reason I ask is because I have seen in the papers some remarks on the difficulty of obtaining signals in the Polar regions. Whether there is anything in it or not I do not know. Another point that

Digitized by Google

strikes me is this, the ionised air, the Heaviside layer; according to the diagrams that have been shown to us on this and other occasions, the ionised layer seems to be able to move—I am speaking from diagrams—some fifty or sixty miles vertically in an exceedingly short period of time. What I should like to know, if Professor Marchant can tell us, is the nature of the movement, and whether it has been calculated in any way what sort of movement in height is necessary in order to produce the results that have been obtained. I think here I should congratulate Professor Marchant very strongly on the data that he has collected and brought forward this evening, because one feels that there has been in the past a great deal of scepticism on the Heaviside layer theory; and one has felt all along that what was wanted to prove its being right or wrong was practical data. Those practical data seem to be coming forward almost daily. There is just one point I am a little bit doubtful about; it was a minor matter, but he mentioned that he thought that the strength of the signals from Paris, from the Eiffel Tower, was because rain had washed the air and insulation improved. Paris is better than London it is true, but I do not think any shower of rain, unless accompanied by hot soda water and soap, and possibly a scrubbing brush, would do anything to clean insulators. When taking them down, and finding the difficulty of removing the layer of soot and sulphuric acid, I sometimes wonder how they insulate at all. I would like information on that point if there is time. One other question I can give corroborative evidence upon. Cardiff has been mentioned as a difficult station to hear. I have had a certain amount of experience of a station close to Cardiff, about 18 miles away. The aerial is very high; I think from the top of the mast you ought to be able to see Cardiff. However, the reception is very poor, compared with what it is from Bournemouth, which is five times the distance away. Another curious thing about it is that Aberdeen is, I may say, very easy to get and very clear. The signals are very strong, but Birmingham, which is in the direct line between the place that I mentioned and Aberdeen, is practically impossible to get at any strength that is worth hearing. So that there is something curious about Cardiff and possibly Birmingham that wants explanation, I think there is no doubt. Now it is my pleasant duty to call upon Professor Marchant to reply to the various points that have been raised by members of the audience. (Applause.)

Professor E. W. Marchant, replying to the discussion, said: I must first of all thank all the speakers for the very kind way in which they have received this lecture. It does not describe any original observations, but is an attempt to summarise and collect information that has recently been published.

Sir Henry Jackson mentioned the differences in short wave fading he had observed over long distances. It is most interesting to find that the differences are so great.

In some tests that were described by Mr. Franklin in connection with his experiments on short waves near Holyhead, the waves were strongly absorbed when the station was on the sea level; but when the transmitter was carried some 300-400 feet up a hill, the absorption rapidly decreased. It seems to me that there may be great differences in absorption due to conditions in the neighbourhood of the transmitter, and it is possible that varying local conditions may be the explanation of some of the variations that have been observed with different short-wave stations. With regard to the fading of dots, Mr. Coursey has given a very likely explanation. All who have had experience with valve oscillators have noticed the change in frequency that occurs when the valve filament is first switched on, and if there is a variation of this kind at the beginning of a dot, it may possibly be the explanation of the "fading" of the dot at the receiver.

With regard to what Dr. Eccles said as to atmospheric conditions, I wish he had given us rather more information about the effects he has observed due to clouds. There must be slight changes in the velocity of wave transmission due to variations in density, because the velocity of light is different in air of different densities. There may be effects due to changes in velocity at quite low levels but the effect is very small, since the difference between the velocity in a vacuum and in air at atmospheric pressure is only 0.03 per cent.

With regard to the effect of thunderstorms and cyclones, I may perhaps be permitted to refer to some observations recorded by General Ferrié at the Eiffel Tower last January. On a particular day in January, there was an enormous increase in strength of signals at a time when there had been heavy electric storms. We have all observed these remarkable increases in signal strength on certain days. Last Sunday, one of my friends told me, was a remarkable day for listening to European Broadcasting Stations.

As regards reflection from the Heaviside layer, the actual angle at which the waves were reflected in Appleton's experiments was of the order of 60 or 70 degrees. He estimated the reflection coefficient for that angle of incidents as of the order of 2 per cent. Therefore, of course, the variation at these distances is relatively small. Mr. Coursey referred to methods of observation. I purposely left out any reference to methods of observation, because there was not room for it in this lecture. The method of observation with a galvanometer is, I think, more reliable than observation with telephones; the method we now use for weak signals is quite satisfactory within certain limits of accuracy; it is that suggested by Round and Lunnon.

A local signal is produced by a valve oscillator, the high frequency current is measured by a thermopile, and the local signal is matched against the incoming signal by using a variable coupling.

Austin shunted his telephone with a resistance and varied the resistances until the signal just disappeared. I have never been able to get accurate results by this method. I think it depends very largely on the personal qualtiies of the observer, some people can get much better results with it than others. The matching method has proved much more reliable. He refers to fading due to variations in wavelength: this is probably due to interference; the strength of signals due to interfering waves may vary within wide limits for small changes in wavelength.

Mr. Atkinson referred to the effect of barometric

Digitized by Google

pressure. I think that unequal distribution of barometric pressure across the Atlantic might be expected to produce bad conditions for signalling. The same thing is true of the variations observed during summer and winter. In summer the atmospheric conditions are usually steadier than in winter, and recently published results have shown less variation in signal strength in summer than in winter. The barometric pressure is rather more uniform in summer, hence it may be expected that, on the whole (apart from atmospherics), signalling conditions will be more uniform. I do not think, however, that any very definite relation has been established between barometric pressure and signal strength.

Mr. Bevan Swift referred to Cardiff. I was very much interested to hear that it is difficult to listen to Cardiff at Aberystwyth. I think there must be abnormal absorption in some directions due to the ground at Cardiff. If the cliffs and ground contain a great deal of mineral matter, one would expect local absorption. I am told that to the north of the Cardiff Station there is a rather high hill. One would expect that hill to prevent the waves going out strongly northwards. I have been told by an observer on the Wirral peninsula, that Cardiff comes through much better on a loop than on an aerial, though I have never proved that myself. There is, of course, some difference between aerial and loop reception, though, as a general rule, as Appleton showed, variations are greater with loop reception. Were they using loop reception on the superheterodyne ?

A Member : Yes.

Professor Marchant : That is the only apparent reason why there should be any difference between the two cases.

Professor Appleton's results showed that variations with loop reception were greater than with a vertical aerial. It is interesting to know that in this case, loop reception is more constant. As regards the effect of the sun on the Heaviside layer, it is difficult to determine with precision the variation in the effective height of the Heaviside layer. If one takes Mr. Hollingworth's results, one can make an estimate of the increase in height from the diminution in strength after sunset. That is the difference in height necessary to produce minimum instead of maximum signal strength. If one takes the curves given in his paper, at a distance of 400 kilometres, there is maximum signal strength with a height of about 72 kilometres, and minimum signal strength at about 82 kilometres, the difference between these two should represent roughly the difference in effective height of the Heaviside layer, before and after sunset at Slough. I do not think the variation in effective height of the Heaviside layer can exceed 10 or 15 kilometres.

With regard to the statement by Mr. Goyder about signals that were inaudible at a distance of five miles, and become audible again at three hundred miles, I should have expected the explanation to be local conditions. If there happened to be a hill, some houses, or even large buildings, which might act as reflectors, it is conceivable that at a relatively short distance there might be interference between a direct ray and a reflected ray. I do not think the Heaviside layer would explain the phenomenon. The Heaviside layer might produce a certain amount of variation, but the angle of incidence for such a short distance is so near to the normal that the reflection coefficient is very low—it is of the order of 2 per cent. at angles of sixty or seventy degrees, and would be less at nearly normal incidence. With regard to the fading from KDKA, being very marked, and that due to New Zealand being less marked, that result, I think, is what one might anticipate. With a station at the Antipodes the waves go over the same length of path whichever way they travel, and therefore variations in signal strength, due to interference between waves in different directions, should not be very marked ; whereas, assuming variations are due to interference between waves going in different directions across the world, a station like KDKA will show more marked fading. I do not think, as a matter of fact, the fading with a station like KDKA is due to interference. As Mr. Goyder suggests the direct ray at this distance must be very weak. It is more likely to be due to variations in the shape of the Heaviside layer, and in the angle at which the waves are reflected. The Heaviside layer must have an irregular surface, and the amazing thing is that reflection and refraction from it are as regular as they actually are.

Mr. Nicholson referred to polarisatfon. I think there is no doubt that a plane polarised beam reflected from the Heaviside layer has its plane of polarisation rotated ; Appleton has showed that. A loop aerial may be used to determine the plane of polarisation of an incoming wave, and it is found that the wave that is received as the result of the combination of a direct beam and a reflected beam is not a plane polarised wave. It is elliptically polarised.

General Holden was asking whether there is any information about the Polar regions. Captain Round's paper made some reference to it. He found that when the path between the transmitting and the receiving station was across the Polar region the signals diminished very markedly, so that it would appear as if the Polar regions, for some reason we do not at present understand, absorbs waves more than other regions of the earth. I have already mentioned the possible motion of the Heaviside layer that one would estimate in explaining the sunset effect. Of course it is not actually a motion of the Heaviside layer. What happens is that the air or gas at these altitudes becomes less ionised as the sun disappears. The ions recombine, and therefore the effective height of the layer is raised. There is no actual motion of air, but the conditions in the upper atmosphere vary. I was very interested to hear what he said about insulators. That the rain thoroughly cleans insulators, I think is very unlikely ; the increase in signal strength after rain is much more likely to be due to the " clearing " of the atmosphere.

Birmingham, like Cardiff, is in a coal district. I do not know what the exact geological formation in the neighbourhood of Birmingham is, but if there is a large amount of iron ore and good conducting material in the ground, one would expect to notice a good deal of absorption.

I must thank you once more for the very kind way in which you have received what I have had to say. (Applause.)

Digitized by Google

Nick-o-Time Tunometer Coils. [R382.009

A SERIES of these coils—the aerial inductance tuner, the reaction tuner, the aerial series vernier, and two other coils wound in the same fashion, but without any tuning arrangements—have just been tested by us for inductance, self-capacity and H.F. resistance.

The construction is unusual and beautifully carried out, and consists of tinned copper wire wound in spiral grooves cut in both faces of an ebonite disc. In the first three coils tuning is effected by a rotating arm carrying a small grooved wheel which runs on the wire, and as the arm is rotated the number of turns of the coil in circuit is altered. The arm and wheel are held in good contact with the wire by means of a fairly strong spiral spring concealed in the long bearing for the arm.

Provision is made for adding loading coils to both tuners, the plugs and sockets being short-circuited by link pieces when no loading is required. The makers state that it is intended to substitute for the tinned copper, nickel plated wire, which, although it will keep clean and give a better contact with the wheel, is likely to have a slightly greater H.F. resistance than the tinned wire, so that the overall gain is not likely to be much, if any at all.

The test results are as follows :—

The reaction tuner and aerial tuner were almost identical in size and constants, the maximum inductance being 116μH and the minimum 28μH; self-capacity 6$\mu\mu$F. H.F. resistance at 750 kilocycles (400m.) 4 and 4.4 ohms respectively.

The two plain coils had inductances of 116μH, and 88μH; self-capacities of 19$\mu\mu$F and 10$\mu\mu$F, and resistances at 750 kilocycles of 3.8 and 2.8 ohms respectively.

The aerial series vernier has a maximum inductance of 36μH.

These figures compare quite well with other well-known makes of coils, but an objection which might perhaps be raised to the tunometer coils is their large size, giving a large stray field and thus necessitating good spacing in any set in which they are used.

A. P. C.

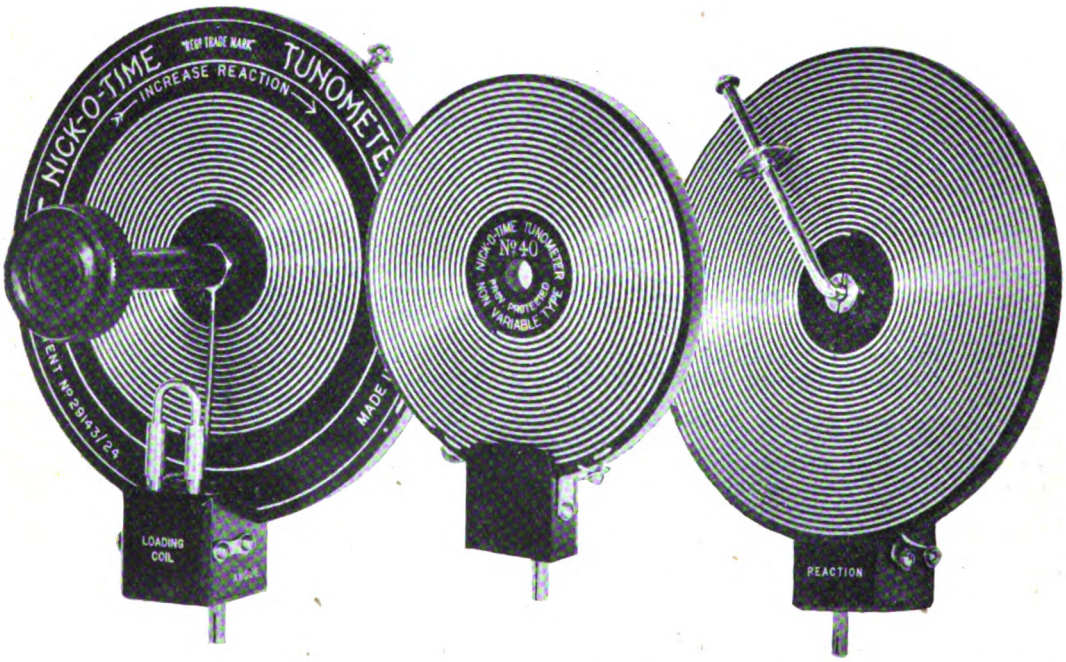

Digitized by Google

Wireless Phototelegraphy. [R582

MUCH interest has been centred during the past few weeks on the development of practical simple methods for the wireless transmission of pictures. The first article on this subject, particularly with regard to the transmitting of pictures from the broadcasting stations, appeared in a recent issue of *The Wireless World*.* Since the publication of that article tests have been conducted from the London broadcasting station, and it is understood that the results obtained have been satisfactory and tolerably good pictures recorded, making use of the Thorne Baker apparatus both for transmission and reception.

In this system the picture is re-photographed on to copper foil so that the surface of the copper is left clean for those parts of the picture representing shadow, whilst the high lights are marked by a deposit of a non-conducting film. The copper plate is attached to the face of a cylinder, which is traversed by a needle in the same way as the needle of a phonograph recorder passes over the surface of a cylindrical record while the cylinder revolves at a speed of 30 revolutions a minute. An intermittent contact is thus made with the surface of the copper, the circuit being broken for the high lights and made at those portions representing deep shadow.

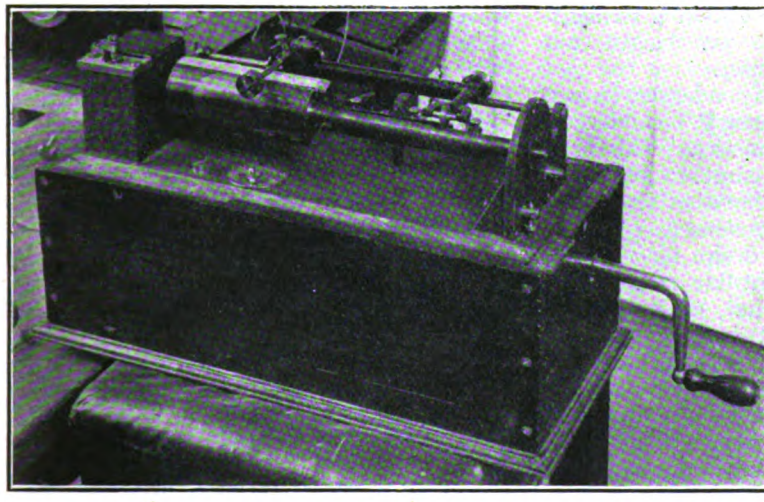

In the Thorne Baker picture transmitting apparatus a copper plate bearing the image is traversed by a metal needle forming part of an electrical circuit. The receiving and transmitting equipments are exactly similar, and the cylinder on which the picture is recorded by an electrolytic process is kept in synchronisation with the transmitter by means of accurately-timed pendulums.

The fluctuating potentials thus obtained are caused to break up the continuous waves at the transmitting station into a series of wave trains of varying duration. At the receiving station the C.W. signals are detected and amplified and applied between a platinum point and a cylinder wrapped with a chemically treated paper, the cylinder being exactly synchronised with corresponding cylinder at the transmitter. The paper on which the image is recorded is moistened with a mixture of potassium iodide and starch solution and a current of one milliampere applied to the paper for even a brief interval of time is sufficient to produce a deep blue coloration.

A simple method of synchronisation is employed in the Thorne Baker system, and makes use of accurately adjusted pendulums at the transmitting and receiving stations. The pendulums are accurately timed to make one swing a second or one complete oscillation in two seconds, and by means of spring contacts circuits are broken at regular two second intervals so as to control an electro-magnetic action arranged to release the rotating cylinder with a constant time period between each revolution. The mechanism comprises an electro-magnet and armature which engages on the revolving cylinder at each revolution, holding it stationary until two seconds have elapsed from the time of its commencement. The driving clockwork is adjusted so that the cylinder revolves in just under two seconds, and by this means the cylinders of the synchronised transmitting and receiving stations commence each revolution in unison.

For any system of picture reception to be used as an auxiliary to broadcast reception, it is essential that only minor modifications shall be necessary to change over to the picture-recording equipment, the tuning and amplifying apparatus being used without modification. It is obvious, therefore, that unless the receiver is to be used in a state of oscillation or a separate heterodyne is employed, that the continuous wave trains cannot be amplified by the low frequency equipment of the broadcast set.

For this reason the development which has recently taken place consists of interrupting the note emitted from an audio-frequency oscillator set up either in front of the microphone of the broadcasting station or applied into the circuits of the intermediate amplifiers. Thus at the receiving station an interrupted note is picked up. To bring about the electrolytic action required for recording the picture, a uni-directional current is required and can be produced either by negatively biassing the last low frequency valve to operate at the lower bend of its grid volts anode current characteristic, or by making use of a valve rectifier with leaky grid condenser. The experimental transmissions which have been so far carried out will encourage the development of picture transmission in association with broadcasting.

* 24th March, 1926, p. 437.

Digitized by Google

The Straight-Line Relationship.

Comparison between Semi-Circular and Square-Law Vanes.

By Oliver Hall, D.Sc. **[R381.4.01**

IN this country there are at the present time two well-known types of variable condenser. The difference between these two types lies in the shape of the moving vanes, the older of the two types having semi-circular vanes and the more recent type vanes of a so-called "square law" pattern. As is within the knowledge of most wireless experimenters, the more recent type with its peculiarly shaped vanes represents an attempt to obtain a straight-line relationship between wavelength and dial setting of the condenser.

A third type of variable condenser, known as a "straight-line frequency" condenser, is now being used in America. This condenser represents an attempt to obtain a straight-line relationship between frequency and dial setting of the condenser.

So great has been the desire for variable condensers with a straight-line relationship of some kind or other, that, on both sides of the Atlantic, the old familiar variable condenser with the semi-circular moving vanes has been referred to by many writers as a "straight-line capacity" condenser.

What is there in this idea of "straight-line relationship," and what is the use of it when it has been attained?

Briefly stated, a straight-line relationship between two varying quantities means that, over a particular range of values, an increase in one of those varying quantities indicates a proportionate increase or decrease in the other varying quantity. As with most mathematical ideas, the thing becomes clearer in the light of actual examples.

Let us consider then the diagram shown in Fig. 1. This diagram shows the relationship obtained between wavelength and dial reading for a well-known type of square-law variable condenser. The observations on which the diagram is based were made one evening recently with a one-valve receiver.

First of all, let us confine our attention to the upper portion of the diagram. If a ruler is applied to this portion of the diagram, it will be found that a straight line can be drawn with a good degree of accuracy through the points for 2BD, 5IT, 2BE, and 5SC. That is to say, a straight-line relationship holds between wavelength and dial reading for the upper portion of the diagram.

In what way does this straight-line relationship help us? The most important way in which it helps us is this: It indicates that, over that part of the condenser dial, the wavelengths are evenly distributed, each scale division of the dial representing the same amount of wavelength. We can easily calculate this amount. The wavelength for 5SC is 422 metres and the dial reading 50. The wavelength for 2BD is 495 metres and the

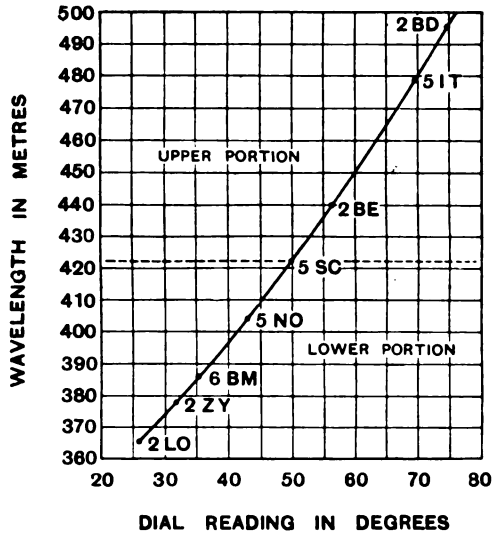

Fig. 1.

dial reading 75. Subtracting 422 from 495 we get 73. Subtracting 50 from 75 we get 25. Dividing 73 by 25 we get 2.92 which gives us the wavelength value of *each* scale division from 50 to 75 on the condenser dial.

Let us now consider the lower portion of the diagram in Fig. 1. There are four points in this portion of the diagram. Let us

Digitized by Google

consider these four points along with the point for 5SC. If we apply a ruler to this lower portion of the diagram, it is at once evident that we cannot draw a straight line through the five points. Hence we may conclude that, for that portion of the condenser dial from 25 to 50, a straight line relationship between wavelength and dial reading does not exist.

Considering the diagram as a whole, it is even more evident that a straight-line relationship between wavelength and dial reading does not exist for the whole condenser dial. Indeed, the straight line drawn in the upper portion of the diagram, when continued in the lower portion, misses the points for 6BM, 2ZY and 2LO completely.

The manufacturer of the particular variable condenser used in taking the observations from which Fig. 1 was drawn, has therefore failed in his attempt to design a condenser giving a straight-line relationship between wavelength and dial reading over the whole range of movement of the condenser. The result obtained in that figure is the rule rather than the exception for the modern "square-law" variable condenser.

How is it that the hunt for this straight-line relationship in variable condensers almost invariably ends in failure? To answer this interesting question we shall have to obtain an understanding as to the part capacity plays in the determination of the frequency or wavelength of a circuit containing that capacity.

Let us start then with the well-known formula

$$\text{Wavelength} = 1{,}885\sqrt{\text{Inductance} \times \text{Capacity}}.$$

Let us assume that the inductance is a pure inductance and that the capacity is made up of two parts, F and C, F being the total *fixed* capacity in the circuit and C the variable capacity determined solely by the variable condenser. Further, let us include in the term F all the stray capacities in the circuit *and the minimum capacity of the variable condenser*. We may then write our formula in this way

$$\lambda = 1{,}885\sqrt{L(F+C)} \quad \ldots \quad (1)$$

where λ = wavelength in metres,

L = inductance in microhenries,

and F and C are measured in microfarads.

Since F includes all the fixed capacities, the stray capacities and the minimum capacity of the variable condenser, if we denote by W the *minimum* wavelength of the circuit, we can write

$$W = 1{,}885\sqrt{LF} \quad \ldots \quad \ldots \quad (2)$$

Now by squaring equation (1) we get

$$\lambda^2 = 1{,}885^2 L(F+C)$$

or

$$= 1{,}885^2 LF + 1{,}885^2 LC \quad \ldots \quad (3)$$

By squaring equation (2), we get

$$W^2 = 1{,}885^2 LF \quad \ldots \quad \ldots \quad \ldots \quad (4)$$

From (3) and (4) we may write

$$\lambda^2 = W^2 + 1{,}885^2 LC \quad \ldots \quad \ldots \quad (5)$$

The result obtained in equation (5) is one of considerable importance and one which does not appear to have received the attention it deserves. Its importance lies in the term W^2, for that term provides us with an explanation as to why the hunt for a straight-line relationship in a variable condenser is so frequently unsuccessful.

If it were only possible for that term W^2 to disappear, all would be plain sailing, but that term does not disappear. Were that term to be zero, it would mean that, when the variable condenser was set at 0, in other words set in its position of minimum capacity, the wavelength value of the circuit would be *zero*, an impossible state of affairs. It is very largely because designers of variable condensers of the "square-law" type have ignored that term W^2 that many of our square-law variable condensers fail to give a straight-line relationship between wavelength and dial reading of the condenser.

Strictly speaking, a straight-line relationship between either wavelength or frequency and the dial reading of a variable condenser cannot be attained in actual practice. What can be done, however, is to obtain an approximation to such a straight-line relationship.

It may come as a surprise to many that a better approximation to a straight-line relationship can be obtained with a variable condenser having semi-circular plates than with a condenser with the modern "square-law" type of plates.

Consider the old type of variable condenser with its semi-circular plates. With such a

Digitized by Google

condenser, the increase in capacity over the minimum capacity is directly proportional to the dial setting. In other words, the C of our equation (5) is equal to aD, where D is the dial setting, and a is some number definitely fixed for that particular condenser. Let us put $C = aD$ in equation (5) and we get

$$\lambda^2 = W^2 + 1{,}885^2 LaD.$$

In order to simplify this result, let us write k for $1{,}885^2 La$. We then have the important result

$$\lambda^2 = W^2 + kD \quad .. \quad .. \quad (6)$$

This equation, which is of somewhat novel form, is extremely important in that it shows

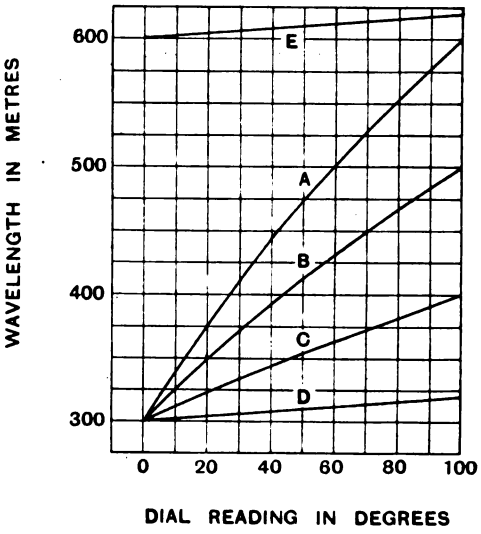

Fig. 2.

the part played by the minimum wavelength of a circuit in determining the actual wavelength to which the circuit may be adjusted by a variable condenser.

The result we have called equation (6) can be put to great use in connection with semi-circular vane condensers. Suppose that we have such a condenser connected in a circuit and that the maximum wavelength to which the circuit will tune is 600 metres. Suppose also that the minimum wavelength to which the circuit will tune is 300 metres. Further, suppose that the dial of the condenser is divided into a hundred equal divisions. Putting $\lambda = 600$, and $W = 300$, and $D = 100$ in equation (6), we have $600^2 = 300^2 + k \times 100$. This gives us a value of k for the particular condenser under consideration, namely $k = 2{,}700$. We may therefore write for this condenser

$$\lambda^2 = 300^2 + 2{,}700\ D.$$

Giving D the values 20, 40, 60, and 80 in succession and calculating the corresponding values of λ, we obtain the set of values given in the section marked A in Table I. This set of values is illustrated diagrammatically by curve A in Fig. 2.

Section B in Table I. gives a set of values obtained in exactly similar fashion for a variable condenser which tunes a circuit from 300 to 500 metres. Section C gives a set of values for a variable condenser which tunes a circuit from 300 to 400 metres. Sections D and E of the same table give sets of values for condensers which tune a circuit from 300 to 320 and from 600 to 620 metres respectively. Each section of Table I. is illustrated by a curve bearing the same distinguishing letter in Fig. 2.

Looking at Fig. 2 in conjunction with Table I., we see that, as the range of the variable condenser is reduced, the curve showing the relationship between wavelength and dial setting gets nearer and nearer to a straight line relationship. In fact, for the two condensers having a 20-metre tuning range, the relationship between wavelength and dial setting is actually a straight-line relationship.

Now a variable condenser with a range of 20 metres corresponds very nearly to the

TABLE I.

	A		B		C		D		E	
Dial Reading.	Wavelength.	Difference in Wavelength.	Wavelength.	Difference in Wavelength.	Wavelength.	Difference in Wavelength.	Wavelength	Difference in Wavelength.	Wavelength.	Difference in Wavelength.
0	300		300		300		300		600	
		80		50		23		4		4
20	380		350		323		304		604	
		65		43		20		4		4
40	445		393		343		308		608	
		57		39		20		4		4
60	502		432		363		312		612	
		52		35		19		4		4
80	554		467		382		316		616	
		46		33		18		4		4
100	600		500		400		320		620	

Variable Condensers with Semi-Circular Vanes.

Digitized by Google

separate single vane of a so-called vernier condenser. Hence we have the most interesting indication that the vernier vane of a variable condenser *with semi-circular vanes*, gives a straight-line relationship between wavelength and dial reading. We must emphasise the point that we are speaking of a variable condenser with semi-circular vanes.

It is interesting to note, in passing, that Table I. indicates quite as clearly as Fig. 1 the straight-line relationship for Sections D and E. The "difference in wavelength" columns in these two sections show a constant difference of 4 metres for every 20 divisions on the condenser dial. Equally true is it to say that Table I. shows that there is not a straight-line relationship in Sections A, B, and C of the table. There is a *varying* difference of wavelength per 20 scale divisions of the condenser dial in each of these three sections.

We have stated that, for a variable condenser with semi-circular vanes, the capacity of the condenser for any setting D of the dial may be written aD, where a is some number. For a variable condenser with vanes of the

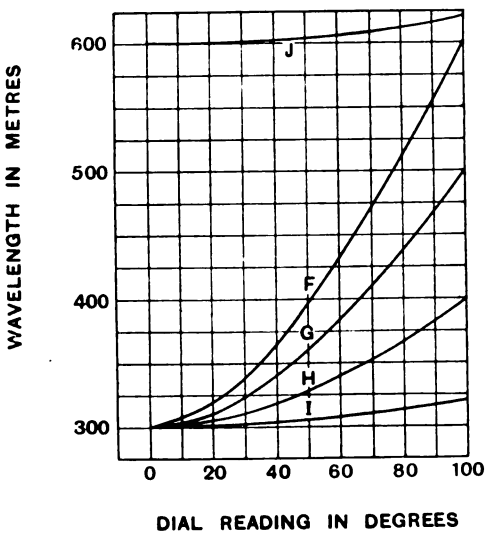

Fig. 3.

"square-law" pattern, the corresponding relationship is $C = aD^2$, a being a number as before, definitely fixed for a particular condenser.

If we put $C = aD^2$ in our equation (5) we obtain the result

$$\lambda^2 = W^2 + 1{,}885^2\ LaD^2$$

Let us again write k for $1{,}885^2\ L\ a$. We then have the result

$$\lambda^2 = W^2 + kD^2 \quad .. \quad .. \quad (7)$$

We shall be able to use our equation (7) in much the same way as we used our equation (6). Suppose that we have a "square-law" variable condenser which will

TABLE II.

	F		G		H		I		J	
Dial Reading.	Wavelength.	Difference in Wavelength.	Wavelength.	Difference in Wavelength.	Wavelength.	Difference in Wavelength.	Wavelength.	Difference in Wavelength.	Wavelength.	Difference in Wavelength.
0	300		300		300		300		600	
		18		10		5		1		1
20	318		310		305		301		601	
		47		30		13		2		2
40	365		340		318		303		603	
		68		44		22		4		4
60	433		384		340		307		607	
		80		55		27		6		6
80	513		439		367		313		613	
		87		61		33		7		7
100	600		500		400		320		620	

Variable condensers with "square law" vanes.

tune a circuit from 300 to 600 metres, and that the dial of this condenser is divided into 100 equal divisions. Putting $\lambda = 600$, $W = 300$ and $D = 100$ in equation (7) gives us $600^2 = 300^2 + k\ 100^2$. From this we can calculate the value of k for this particular condenser. We get $k = 27$.

Hence for this particular "square law" condenser we may write

$$\lambda^2 = 300^2 + 27\ D^2.$$

Giving D the values 20, 40, 60 and 80 in succession and calculating the corresponding values of λ, we obtain the set of values given in the section marked F in Table II. This set of values is illustrated in the form of a curve as curve F in Fig. 3.

Section G in Table II. gives a set of values obtained in the same way for a "square law" variable condenser which tunes a circuit from 300 to 500 metres. Section H gives another set of values for a similar condenser which tunes a circuit from 300 to

Digitized by Google

400 metres. Sections I and J refer to small "square law" condensers which tune a circuit respectively from 300 to 320 metres and 600 to 620 metres. These sets of values are all illustrated by curves in Fig. 3 bearing the same distinguishing letters.

The most important point to note with regard to Fig. 3 is that none of the curves shown there approximate very closely to a straight-line relationship. The same thing is evident from Table II. None of the difference of wavelength columns show a constant increase in wavelength per 20 scale divisions on the dial.

From Figs. 2 and 3 we have this definite result. While a "square law" variable condenser possesses the advantage that over certain parts of its dial, a fairly close approximation to a straight-line relationship between wavelength and dial reading is

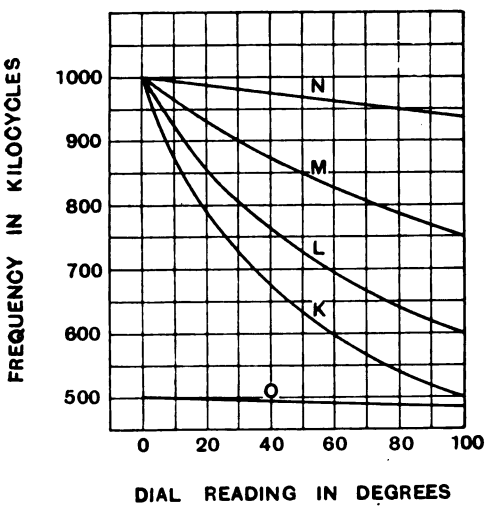

Fig. 4.

obtainable (see Fig. 1 and parts of the curves in Fig. 2), the older type of variable condenser with semi-circular vanes possesses the advantage that, as its tuning range is reduced, the relationship between wavelength and dial reading approaches more and more closely to the straight-line type. With a small condenser having semi-circular vanes (tuning range 20 metres or thereabouts) there is a most definitely defined straight-line relationship between wavelength and dial reading.

Let us now see how the two types of variable condensers compare when we consider the relationship between frequency and dial reading. For each wavelength given in Table I., it is easy to find the corresponding frequency in kilocycles. The frequency

TABLE III.

	K		L		M		N		O	
Dial Reading.	Frequency.	Difference in Frequency.	Frequency.	Difference in Frequency.	Frequency.	Difference in Frequency.	Frequency.	Difference in Frequency.	Frequency.	Difference in Frequency.
0	1000		1000		1000		1000		500	
		210		143		75		13		3
20	790		857		925		987		497	
		112		90		53		13		4
40	678		767		872		974		493	
		78		71		47		13		3
60	600		696		825		961		490	
		60		56		40		12		3
80	.540		640		785		949		487	
		40		40		35		12		3
100	500		600		750		937		484	

Variable condensers with semi-circular vanes.

values obtained are shown in Table III. For ease of calculation, the formula

$$\underset{\text{(kilocycles)}}{\text{Frequency}} = \frac{300{,}000}{\text{Wavelengths}}$$

has been used.

Sections K, L, M, N, and O of Table III. correspond respectively with Sections A, B, C, D, and E of Table I. The variable condensers are all of the semi-circular vane type.

The numerical results given in Table III. are illustrated in Fig. 4, the same distinguishing letters being used. It will again be noticed that there is a decided approach to a straight-line relationship between the two quantities under consideration (frequency and dial reading in this case) as the tuning range of the condenser is decreased.

Curve *N* is practically a straight line. Curve *O* is also very nearly a straight line. The frequency difference per 20 divisions on the condenser dial is different however for the two curves, being 13 for curve *N* and 3 for curve *O*.

The numerical values given in Table IV. are obtained directly from Table II. by means of the above frequency wavelength formula. The different sections of Table IV. are illustrated in Fig. 5, the same distinguishing letter being used for section of table and corresponding curve.

The peculiar shape of the curves *P* and *Q* in Fig. 5 should be noticed. These two

Digitized by Google

curves bend to the right at the top of the diagram and to the left at the bottom of the diagram. The corresponding difference in frequency columns in Table IV. show this peculiarity, for the numbers in those columns first increase and then decrease. In none of

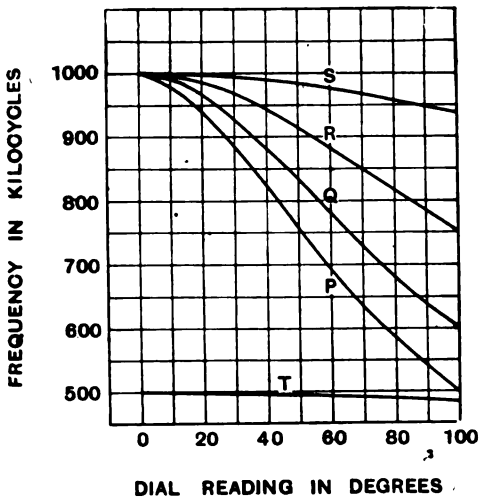

Fig. 5.

the five curves shown in Fig. 5 is there a close approach to a straight-line relationship between frequency and dial reading.

Hitherto we have dealt with variable condensers with moving vanes of the (i.) semi-circular and (ii.) " square law " type which tune circuits over the following ranges :—

Wavelength 1. 300 to 600 metres ;
2. 300 to 500 metres ;
3. 300 to 400 metres ;
4. 300 to 320 metres ;
5. 600 to 620 metres ;

or in frequencies 1. 1,000 to 500 kilocycles ;
2. 1,000 to 600 kilocycles ;
3. 1,000 to 750 kilocycles ;
4. 1,000 to 937 kilocycles ;
5. 500 to 484 kilocycles.

Our results may be summarised thus :—

As the tuning range of a variable condenser with semi-circular moving vanes is reduced there is a rapid approach to a straight-line relationship between wavelength and dial reading. For a small semi-circular vane condenser, tuning range 20 metres, there is a practically exact straight-line relationship between wavelength and dial reading.

With a variable condenser having " square law " moving vanes, a straight-line relationship between wavelength and dial reading exists only for a certain portion of the dial,

TABLE IV.

	P		Q		R		S		T	
Dial Reading.	Frequency.	Difference in Frequency.	Frequency.	Difference in Frequency.	Frequency.	Difference in Frequency.	Frequency.	Difference in Frequency.	Frequency.	Difference in Frequency.
0	1000		1000		1000		1000		500	
		60		32		17		3		1
20	940		968		983		997		499	
		118		86		40		7		2
40	822		882		943		990		497	
		129		101		61		13		3
60	693		781		882		977		494	
		108		105		65		19		6
80	585		676		817		958		490	
		85		76		67		20		6
100	500		600		750		938		484	

Variable Condensers with " square law " vanes.

usually embracing the higher readings. There is no marked approach to straight-line relationship as the tuning range of the condenser is decreased, or at least there is not the same degree of approach to a straight-line relationship as in the case of a condenser with semi-circular vanes.

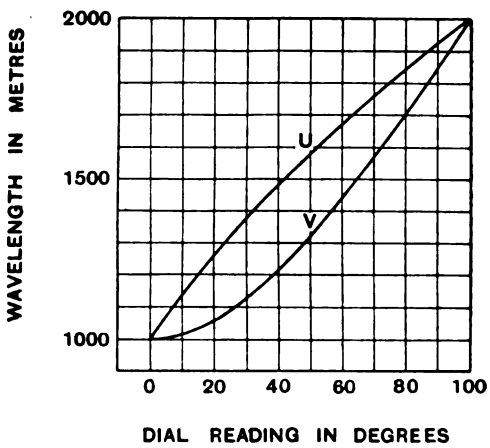

Fig. 6.

When dealing with frequency, the variable condenser with " square law " moving vanes gives nothing like a straight-line relationship between frequency and dial reading. The

Digitized by Google

variable condenser with semi-circular moving vanes shows the same approach to a straight-line relationship between frequency and dial reading as the tuning range is decreased as it did in the case of wavelength and dial reading.

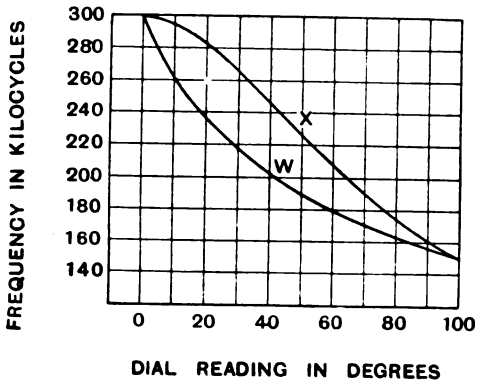

Fig. 7.

All the above points indicate that the older type of variable condenser with semi-circular moving vanes is a better instrument for obtaining a straight-line relationship than the newer condenser with so-called "square law" moving vanes.

Figs. 6 and 7 show curves indicating the type of relationship between wavelength and frequency and the dial reading of both types of condenser having a tuning range of 1,000 to 2,000 metres (300 to 150 kilocycles). There is here in each case a big divergence from a straight-line type of relationship.

Long-Distance Work.

By Hugh N. Ryan (5BV). **[R009.2**

AFTER the weather which prevailed at Easter, the winter can be considered to have come to a definite end, and as it has been our first winter on 45 metres it is interesting to look back and see what winter means to us now. We all know what it meant before, on 100 and 200 metres—it was just the only time of the year when any long-distance work could be done, and even then one had to sit up all night for it. The old-timers will never forget those cold nights.

After a steady descent in wavelength, starting at 1,000 metres soon after the war, I think we have now found our final and most useful waves to be between 35 and 50 metres. Having used these waves for a year there is no doubt that they are much more useful in the summer than in the winter. Contact with the whole world has been maintained throughout the winter, with no very large gaps, but not on anything like the same scale as last summer, when there were many less stations on this wave. This being the case, we may look forward to a pretty busy summer.

6VP, who was recently reported to have worked U.S.A. on very low power, is now doing it regularly, and has also added Brazil to his QSO list. Judging by results, this must be about the most useful low-power station in the country.

5QV's long-awaited change of QRA will be an accomplished fact by the time this appears, and he will be glad of reports from all parts on signals from the new station.

6TD, who has for a long time been doing excellent work with both the Americas, is now at last in touch with Australia.

2LZ, who used to be heard working every part of the globe, has become interested in the "weather and DX" problem, and is now engaged exclusively on its systematic investigation, in collaboration with an American station.

5NJ has some fairly high-power phone going now, and I have heard him working to Australia with it, but it does not yet appear to be functioning very well. No doubt it will soon be as good as his low-power speech, which is very good indeed.

The most noticeable thing about all the month's work is the comparative ease with which one can still work Australians, and the great difficulty of working New Zealanders.

Digitized by Google

Effective Resistance of Inductance Coils at Radio Frequency.—Part II.

By S. Butterworth. **[R144**

(*Admiralty Research Laboratory, Teddington.*)

5. Alternating Current Resistance of Two Parallel Wires.

This is the simplest case in which the theory may be applied. If the current is I and the axes of the wires are separated by a distance c, then each wire is situated in a field of intensity $2I/c$ due to the current in the other wire. The eddy loss due to this field is obtained by replacing H by $2I/c$ in (10) and we then have for both wires

$$W_h = RI^2Gd^2/c^2 \quad .. \quad (15)$$

so that the increment in resistance due to this loss is

$$R_h = RGd^2/c^2 \quad .. \quad (16)$$

Adding this to the A.C. resistance R_s of a solitary wire the total resistance is

$$R_c = R_s + R_h = R(I + F + Gd^2/c^2) \quad .. \quad (17)$$

This formula is only accurate if d/c is not too large.

When the wires are close together so that d/c is nearly unity we can no longer neglect the fact that the induced eddy currents distort the field in the plane containing the axes of the two wires. In fact the two terms of (17) are the first two terms of an infinite series. The next term has been calculated and it has been found that (17) must be replaced by

$$R_c = R(I + F + Gd^2/c^2 + GHd^4/c^4 + \ldots) \quad (18)$$

in which H is a new function of z having the following values :—

If we assume that the remaining terms are in geometrical progression and therefore write

$$R_c = R\left(I + F + \frac{Gd^2/c^2}{1 - Hd^2/c^2}\right) \quad \ldots \quad (19)$$

we obtain a formula which is in close agreement with experimental results for values of d/c up to 0.9.

6. Single-Layer Systems of Spaced Parallel Wires. Short Coils.

Formula (17) will clearly also hold for a two-turn coil provided that c is small compared with the radius of the coil and that d/c is not too large.

If we take three coplanar parallel wires of equal axial separation c, the field acting on each of the outer wires due to the current in the remaining two is $3I/c$ and there is no field acting on the middle wire.

Thus the mean square field for all three wires is

$$(3^2 + O + 3^2)I^2/3c^2 = 6I^2/c^2$$

Using this in (10) we obtain for the mean value of R_h

$$R_h = 1.5\ RG\ d^2/c^2$$

where R is the D.C. resistance of one wire. For all three wires in series we simply multiply by 3, or, what is the same thing, regard R as the D.C. resistance of the whole system. Thus for a system of three wires the A.C. resistance formula is

$$R_c = R(1 + F + 1.5Gd^2/c^2) \quad .. \quad (20)$$

z ..	0	1	2	3	4	5	large	
H	0.042	0.053	0.169	0.348	0.466	0.530	0.750	Go and Return
	0.042	0.033	—0.056	—0.152	—0.176	—0.185	—0.250	Currents in same direction

Digitized by Google

The same procedure may be applied to any number of coplanar, equally spaced, parallel wires and in general we get

$$R_c = R(1 + F + uGd^2/c^2) \quad .. \quad (21)$$

in which u depends upon the number of wires in the system. Thus we have

No. of wires	2	4	6	8	10	12	16	24	32	Inf.
u	1.00	1.80	2.16	2.37	2.51	2.61	2.74	2.91	3.00	3.29

The last number has been obtained by integration, the exact value being $\pi^2/3$.

Formula (21) is clearly applicable to solenoidal or disc coils provided they are single layer and of winding length or depth which is very small compared with the coil radius.

7. Single-Layer Spaced Solenoids.

Turning now to the case where the ratio of winding length to coil radius is no longer small we may still regard the wire in an individual turn as practically straight, as our loss formulæ would only cease to be valid if the curvature of the wire were comparable with the wire diameter. Such a condition will scarcely ever occur in practice. The general field acting upon the wire is, however, considerably altered by the curvature of the surface of the coil.

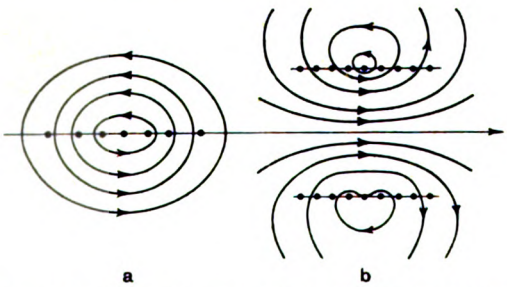

Fig. 4 (a) *shows the symmetrical distribution of the lines of force about the central turn of a very short solenoid;* (b) *shows the distribution of the lines of force in a long solenoid when the central turn is present (upper part of figure) and when it is absent (lower part of figure).*

In the case of the straight system of wires the field acting upon one wire is perpendicular to the plane of the system, so that in very short solenoids the field is practically parallel to the coil radius, the lines of force being disposed symmetrically about the central turn as in Fig. 4 (a). As the length of the solenoid gets greater, however, the concentration of the lines in the interior of the solenoid causes the lines of force to cut across the wires of the coil in a direction inclined to the radius, so that we have to consider two components of the field, which are parallel to the coil axis and the coil radius respectively. For the central turn the axial field only is present, but for the outer turns the radial field predominates. The existence of a field parallel to the axis at the central turn will be understood when we bear in mind that the field playing on the wire is that due to the *remaining* turns. Thus (see Fig. 4), if we suppose the central turn removed, the lines of force within the coil extend into the gap as shown and thus give an axial field component through the centre of the central wire. Although this field is distorted by the field due to the current in the central wire, it is the true field to use in calculating the general field losses, as has already been explained in the preliminary survey.

In the case of an infinitely long solenoid, if the pitch of the turns is c the field inside the solenoid is $4\pi I/c$ and outside the solenoid is zero. If a turn be supposed removed, then in the neighbourhood of the gap the field changes rapidly from $4\pi I/c$ to zero as we pass through it, so that the field acting in this space may be taken as $2\pi I/c$. Using this in the loss formula (10) and proceeding as in the last section we obtain for the A.C. resistance of any one turn a formula precisely similar to (21), in which the value of u is π^2.

In the case of finite solenoids it is necessary to calculate the axial and radial field components at every point and then determine the mean square value throughout the turns. It is convenient to distinguish between the contributions of the two field components; otherwise our formula is precisely the same as (21), the following values of u holding for various ratios of coil length to coil diameter.

Digitized by Google

TABLE II.

VALUES OF u FOR SINGLE LAYER SOLENOIDS OF MANY TURNS (SPACED).

D = diameter of coil. b = length of coil.
u_1 = contribution of radial component of field.
u_2 = contribution of axial component of field.

b/D	u_1	u_2	$u=u_1+u_2$
0.0	3.29	0.00	3.29
0.2	3.13	0.50	3.63
0.4	2.83	1.23	4.06
0.6	2.51	1.99	4.50
0.8	2.22	2.71	4.93
1.0	1.94	3.35	5.29
2	1.11	5.47	6.58
4	0.51	7.23	7.74
6	0.31	8.07	8.38
8	0.21	8.52	8.73
10	0.17	8.73	8.90
Inf.	0.00	9.87	9.87

The above values will not hold for coils of few turns, as u depends upon the turns as well as the shape of the coil. It is probably possible to calculate the value of u in these cases by assuming each turn to be a separate circle. The above values are, however, probably sufficiently accurate for purposes of design, as the approach to the final value as the turns increase appears to be fairly rapid in the case of the short coils of Section 6.

It is interesting to notice that if the length of the coil is less than its diameter u is very nearly $3.29+2b/D$.

8. Single-Layer Disc Coils.

Single layer disc coils may be treated by a method similar in principle to that for solenoids. The field is in this case entirely perpendicular to the plane of the coil. If D is the overall diameter of the coil and t is the winding depth, the factor u in formula (21) is a function of t/D which is given in Table III.

9. Closely-Wound Single-Layer Coils.

The simple formula (21) is only accurate when d/c is not too large. When the coil is closely wound and the frequency is high, the distortion of the current distribution in each turn becomes so pronounced that it is no longer permissible to regard this current as concentrated at the centre of the wire in calculating the field acting on each turn. If we recall the principle that the effect of the eddy currents is to force the magnetic field round rather than through the wire, it will be seen that in the case where the field is cutting across the wires transversely the eddy currents induced in any one turn increases the intensity of the field acting upon its neighbours, so that the simpler theory underestimates the losses. If, on the other hand, the field is tangential to the turns the eddy currents in one turn reduce the intensity of the field acting on neighbouring turns and the simple formula overestimates the losses. Thus in the case of an infinite solenoid at very high frequencies, we find, on inserting in (21) the appropriate values of u, F and G, that when the turns are practically touching, the A.C. resistance of the coil should be 5.94 times the A.C. resistance of the same wire when straight. If, however, the field due to the eddy currents is taken into account the multiplier is reduced to 3.41.

TABLE III.

VALUES OF u FOR SINGLE-LAYER DISC COILS OF MANY TURNS (SPACED).

D = overall diameter of coil.
t = winding depth of coil.

t/D	u	t/D	u
0.000	3.290	0.250	4.749
0.025	3.315	0.275	5.041
0.050	3.373	0.300	5.364
0.075	3.459	0.325	5.718
0.100	3.567	0.350	6.104
0.125	3.702	0.375	6.523
0.150	3.859	0.400	6.968
0.175	4.042	0.425	7.436
0.200	4.251	0.450	7.911
0.225	4.486	0.475	8.354
0.250	4.749	0.500	8.638

The mathematical theory taking into account the external field developed by the eddy currents is rather complicated, but the writer[13] has succeeded in developing

[13] For the full theory of closely-wound coils see *Proc. Roy. Soc.*, A, Vol. 107, p. 693, 1925.
The experimental example is from Professor Howe's paper, "The High Frequency Resistance of Wires and Coils," *Journ. I.E.E.*, Vol. 58, p. 152, 1920.

Digitized by Google

relatively simple formulæ to cover the case of closely-wound coils which hold for solenoids of any length when the turns are many and for very short coils when the turns are few.

The formula for the many-turn coils is

$$R_c = R\,\{\alpha(1+F)+(\beta u_1+\gamma u_2)\,Gd^2/c^2\} \quad \ldots \quad (22)$$

where α, β, γ depend both on d/c and on z as in the following Table.[14]

[14] Formula (22) is applicable to disc coils as well as solenoids, the value of u_2 being zero in this case.

as to show that it is not advisable to employ very closely-wound coils; so that the simple formula may still be used for *efficient* coils for practically all frequencies. The more elaborate formula has, however, been useful in checking the experimentally found resistances for closely-wound coils, and it has been shown that in coils where reasonable precautions have been employed in regard to the surrounding dielectric the measured resistances agree with the experimental values. In fact in a case where the losses were measured by determining the rise in

TABLE IV.

VALUES OF α, β, γ IN FORMULA (22).

d/c	$z=1$.			$z=2$.			$z=3$.		
	α.	β.	γ.	α.	β.	γ.	α.	β.	γ.
1.0	1.01	1.02	0.96	1.09	1.34	0.67	1.31	2.29	0.49
0.9	1.00	1.02	0.97	1.06	1.29	0.72	1.20	1.99	0.55
0.8		1.02	0.98	1.04	1.23	0.78	1.13	1.73	0.62
0.7		1.02	0.98	1.02	1.18	0.83	1.08	1.52	0.68
0.6		1.01	0.99	1.00	1.13	0.87	1.04	1.36	0.75
0.5		1.01	0.99		1.09	0.91	1.02	1.24	0.82
0.4		1.01	0.99		1.06	0.94	1.01	1.14	0.88
0.3		1.00	1.00		1.04	0.97	1.00	1.06	0.93
0.2					1.01	0.99		1.03	0.97
0.1					1.00	1.00		1.01	0.99

d/c	$z=4$.			$z=5$.			$z=$inf.		
	α.	β.	γ.	α.	β.	γ.	α.	β.	γ.
1.0	1.43	3.61	0.43	1.50	4.91	0.41	1.71	inf.	0.35
0.9	1.30	2.75	0.49	1.37	3.39	0.46	1.55	12.45	0.39
0.8	1.21	2.12	0.55	1.25	2.48	0.53	1.41	4.83	0.44
0.7	1.12	1.71	0.62	1.15	1.94	0.60	1.27	2.87	0.52
0.6	1.07	1.51	0.70	1.09	1.60	0.68	1.16	2.03	0.60
0.5	1.03	1.32	0.78	1.04	1.37	0.76	1.08	1.59	0.69
0.4	1.02	1.19	0.85	1.02	1.22	0.84	1.03	1.33	0.78
0.3	1.00	1.10	0.91	1.00	1.11	0.90	1.01	1.17	0.87
0.2		1.04	0.96		1.05	0.96	1.00	1.07	0.94
0.1		1.01	0.99		1.01	0.99		1.02	0.98

It will be seen that the factors α, β, γ trend towards unity as d/c and z get smaller. When z is less than unity the simple formula (21) will cover all possible values of d/c. For greater values of z, the simple formula, as will be shown below, indicates a value of d/c giving minimum losses which is such

temperature of the central turn of a fairly long solenoid, the theory shows that it is the losses due to the tangential field only that are being measured, the losses due to the transverse field, occurring as they do mainly at the ends of the coil, having very little effect upon the central temperature.

Digitized by Google

In a particular case when z was equal to 21.6, the ratio of A.C. to D.C. losses was found by the above method of measurement to be 21.8 when the spacing was such that $d/c \doteqdot 0.9$. The above formula gave the loss ratio as 27.8 when all the losses were taken into account and 22.5 when the transverse field losses were ignored. The latter value is in very fair accord with experiment, particularly when it is remembered that the theoretical formula assumes "infinite" turns. For a loosely-wound coil ($d/c \doteqdot 0.5$), theory gave the ratio of the losses as 14.1 and experiment 14.0. In this case the losses are largely the mere skin losses, and are therefore distributed practically uniformly over the coil. The example seems to indicate that the "central" temperature method of estimating the A.C. losses fails to take into account the extra end losses, and this is borne out by a consideration of the thermal constants of the coil.

10. The Correction for Self-Capacity.

In establishing the formula for the copper losses we have assumed that the current is the same in every turn of the coil. Actually this is not so at radio frequencies, because of the distributed self-capacity. As regards the reactance, the self-capacity is allowed for by assuming that the coil is shunted by a small condenser, and this assumption is justified by measurement. As regards the resistance, we can no longer appeal to experiment, but if we assume that the distributed self-capacity, is sufficiently represented by an end capacity, it is easy to show that when the reactance of the coil is large compared with the resistance the measured A.C. resistance of the coil is given by

$$R' = R_c / (1-\omega^2 LC)^2 \quad \ldots \quad (23)$$

where L is the inductance of the coil, C is its self-capacity and $\omega/2\pi$ is the frequency.

As to whether this end capacity assumption is justifiable has been the subject of a great deal of discussion, but Breit[15] has shown that in the case of very short coils there is theoretical justification for the formula, and has supplied the correction which will carry us right through the resonating frequency of the coil. His corrected formula shows that (23) is good enough for most practical purposes for frequencies lower than about one-third the resonating frequency. Now, although the writer does not entirely agree in regard to the truth of Breit's formula, yet his conclusion in regard to the range of (23) is probably sound. In the neighbourhood of the resonating frequency, Breit's more elaborate formula is only valid for that portion of the copper resistance which we have represented by R_s. There is a different correction for the portion of the resistance which depends upon the mean square field acting upon the coil, as the latter does not follow the same law of distribution as the mean square current when we take into account the variation of current from turn to turn of the coil due to the flowing off of the dielectric current. It is not proposed, however, to deal with this in the present article.

It will be seen from formula (23) that it is a distinct advantage to use coils of low self-capacity even from the point of view of copper losses, as the circulating currents due to the self-capacity cause loss of energy in the copper portions of their paths. This added resistance due to self-capacity is thus a true copper loss. It is sometimes found that stray wires attached to coil terminals cause an appreciable increase in resistance of the coil. This may be in part accounted for by the resulting increase in the apparent self-capacity of the coil, especially when the coil is being used near its own natural frequency.

11. Single-Layer Coils at High Frequencies.

When the frequency is so high that the approximations (9) and (14) hold for $1+F$ and G, formula (21) assumes the simple form

$$R_c = \frac{A}{\sqrt{\lambda}} + B \quad \ldots \quad \ldots \quad (24)$$

where λ is the wave-length in metres and, for copper, A and B have the values

$$A = 660\, Rd \left(1 + \tfrac{1}{2}u\frac{d^2}{c^2}\right)$$
$$B = \tfrac{1}{4} R \left(1 - \tfrac{1}{2}u\frac{d^2}{c^2}\right) \quad \ldots \quad (25)$$

Now, in such cases it has been found experimentally that the measured effective resistance, after due correction for self-capacity, fits very closely a formula of the type

[15] *Bureau of Standards*, Scientific Paper No. 430, 1922.

Digitized by Google

$$R_m = \frac{A'}{\sqrt{\lambda}} + \frac{B'}{\lambda^2} \quad \ldots \quad \ldots \quad (26)$$

and the value of A' required to fit (26) agrees closely with the value of A in (24). We need not trouble much about the term B in (24) as it is usually so small that it is within the error of measurement. There seems to be no doubt therefore, that the first term in (26) is that due to the copper loss in the coil. As regards the second term it must be noted that in all cases where a formula of this type has been found to fit the experimental facts, the method of measurement employed has been the well-known resistance variation method, in which the coil forms part of a resonating circuit containing an air condenser which is assumed free from loss. It may be that a portion of this term is really due to loss which does not occur in the coil at all. This view seems to be supported by the few reliable measurements which have been made in which the method does not involve a resonating condenser. There is not, however, sufficient evidence at present to decide this question.

As regards the relative values of the two terms in (26) the following experimental results are of interest: Table V. gives the details of measurement and analysis in the case of a single-layer coil of 23.5 cm. diameter and winding length 1.0 cm. wound with 13 turns of No. 22 D.S.C. wire, the whole being held together by wax and silk tape. The measured inductance of the coil was 100μH and the self-capacity 20$\mu\mu$F.

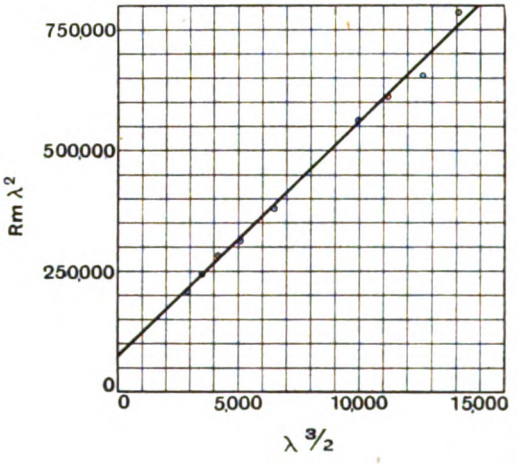

Fig. 5. *Showing how* A′ *and* B′ *in the formula* $R_m = \frac{A'}{\sqrt{\lambda}} + \frac{B'}{\lambda^2}$ (26) *may be found by plotting* $R_m\ \lambda^2$ *against* $\lambda^{\frac{3}{2}}$ *and finding the slope* (A′) *and the intercept on the vertical axis* (B′) *of the resulting straight line.*

The values of A' and B' used in the Table are

$$A' = 49.7,\ B' = 7.0 \times 10^4.$$

TABLE V.

Separation of Losses in Single-Layer Coil.

R_1 = measured A.C. resistance. $R_m = R_1(I - \omega^2 LC)^2$. (See formula 23.)
$A'/\sqrt{\lambda}$ = term due to copper loss. B'/λ^2 = term due to remaining losses.

The values of A' and B' are found by plotting $R_m\lambda^2$ against $\lambda^{3/2}$ as in Fig. 5. If (26) is valid the result should be a straight line the slope of which determines A' and the intercept on the vertical axis determines B'. The figure and the smoothed values of R_m show that the law holds for this coil.

λ (Metres.)	R_1 (Ohms.)	R_m (Ohms.)	$A'/\sqrt{\lambda}$	B'/λ^2	Smoothed R_m (Ohms.)	Cu. loss. / Total loss.
206	7.2	5.00	3.40	1.65	5.05	0.67
229	6.2	4.64	3.30	1.34	4.64	0.71
260	5.2	4.16	3.09	1.02	4.11	0.75
294	4.3	3.61	2.90	0.81	3.71	0.78
350	3.5	3.10	2.66	0.57	3.23	0.82
463	2.8	2.62	2.31	0.33	2.64	0.87
500	2.6	2.46	2.22	0.28	2.50	0.89
543	2.5	2.38	2.14	0.24	2.38	0.90
584	2.3	2.30	2.06	0.20	2.26	0.91

Digitized by Google

The D.C. resistance of this coil was 0.444 ohm, so that we find from (25)

$$R_c = \frac{51}{\sqrt{\lambda}} - 0.05$$

Thus the term depending upon wave-length agrees very closely with the value deduced from the measurements, while the constant term is very small.

The values for six other coils are given in Table VI. below.

12. Effect of Spacing in Single-Layer Coils.

Suppose a single layer coil to be wound with various gauges of wire, keeping the pitch of the turns constant. Under these circumstances the inductance would remain practically constant, but an examination of (25) shows that the resistance will pass through a minimum value for a particular gauge of wire. To prove this, notice that since R is inversely proportional to the square of the wire diameter, the quantity A is proportional to $\frac{1}{d} + \frac{1}{2} u \frac{d}{c^2}$. Thus A is equal to the sum of two terms which have a product independent of the diameter.

TABLE VI.

Coil.	D cm.	b cm.	d mm.	c mm.	Inductance (μH.)	Observed A'	Observed B'	Calcd. A'	B'/L^2.
1	31	1.8	2.2	2.6	36	9.5	2.14×10^4	10.4	16.4
2	19.5	2.6	2.0	2.4	43	11.8	2.15 ,,	11.2	11.5
3	22.6	2.0	0.7	1.5	75	25.1	7.4 ,,	25.5	13.1
4	20.0	6.5	3.0	3.6	80	14.3	7.0 ,,	13.2	10.9
5	19.6	2.15	1.1	1.4	84	25.5	7.0 ,,	25.6	10.0
6	23.5	1.0	0.7	0.8	100	50	7.0 ,,	51.0	7.0
7	17.5	7.3	1.62	1.8	320	56	1.7×10^6	55.0	16.5

It is interesting to notice that if B is divided by the square of the self-inductance of the coil, as in the last column, the result is of the same order of magnitude for all the coils. This is the result we should expect if the coils were all shunted by a constant high resistance of the order of 0.2 to 0.4 megohm.

The values for coils 3, 6 and 7 are from measurements taken at the N.P.L. about six years ago using the best condensers then available. It is understood that since then better condensers have been constructed, and it would be of interest to have a corresponding series of values with these new condensers.

The remaining coils were measured by Lindemann and Hüter.[16]

Although great stress has been laid in this section upon the loss outside the copper, the copper loss is usually the predominant factor, as is seen from the last column of Table V. The coil of this Table is one which would normally be used at a wave-length in the neighbourhood of 350 metres, so that then the copper losses are 82 per cent. of the total losses.

The two terms may therefore be regarded as the two sides of a rectangle, and variation of the diameter is equivalent to alteration of the shape of this rectangle keeping its area (product of sides) constant. The sum of the two sides is half the periphery of the rectangle, so that the periphery of the rectangle measures the size of the quantity A. Now, for rectangles of equal area, the one with the least periphery is a square. The value of A is then the least when

$$\frac{1}{d} = \frac{1}{2} u \frac{d}{c^2}$$

or

$$\frac{d}{c} = \sqrt{\frac{2}{u}} \quad .. \quad .. \quad (27)$$

Now, at very high frequencies, (24) shows that the copper loss is proportional to A, so that the condition of minimum loss is then given by (27). Using this value of d in (24) and neglecting B we find that the minimum value of the copper resistance at

[16] *Verh. Deutsch. Phys. Gesellschaft*, Vol. 15, p. 219, 1913.

Digitized by Google

very high frequencies is given by the formula

$$R_c = 0.0020 \frac{l}{c} \sqrt{\frac{u}{\lambda}} \quad .. \quad (28)$$

the D.C. resistance having been expressed in terms of the length l of the wire, the resistivity of copper (1.7×10^{-6} ohms cms.) and the diameter of wire as expressed by (27). R_c is in ohms when l, c are in cms, and λ is in metres.

In support of this theory we may quote the following experimental results*: A set of coils were wound on formers each of diameter 3 in. and winding length 2 in. and each having 53 turns. The gauges of wire varied from coil to coil, and curves were obtained connecting d/c with resistance for various wave-lengths. Thus for the case of $\lambda = 300$ metres the following smoothed values were read from the curves.

d/c ..	0.2	0.3	0.4	0.5	0.6	0.7	0.8	0.9	
R_m	12.5	7.4	5.4	4.7	4.6	4.8	5.5	7.1	ohms.

* The writer is indebted to the Federal Telegraph and Telephone Co., New York, for permission to make use of these results.

Now, for this coil $u = 4.62$, so that by (27) the best value of d/c should be 0.66 and then by (28) the copper resistance is 3.3 ohms. The best spacing is in close agreement with experiment, and the value of the copper resistance is then 70 per cent. of the measured value.

The curves for 200 and 500 metres show similar minima at $d/c = 0.6$ and the minimum values indicate that the copper losses as given by (28) are 65 and 78 per cent. respectively of the total losses. These percentages are of the same order as those discussed in the last section.

As regards the measured resistances at closer spacings, the theoretical formula (21) does not give as rapid an upward trend as the curves indicate, but comparison with the more elaborate formulæ for close windings shows that this upward trend may still be mainly due to copper loss.

Theory and experiment therefore show that formula (27) is reliable for determining the best gauge of wire to use for a single-layer coil of any given shape. The question of the best shape of coil is deferred until we have dealt with the formulæ for multilayer coils.

Digitized by Google

Mercury Contact Switches and Connecting Boards.

By T. B. Baker. **[R387**

NUMEROUS articles have appeared, dealing with switches of various types and their application to experimental work. Those of the mercury contact type appear to have been quite overlooked. However, they are extremely adaptable for all purposes, especially where quick changes of connections are required, and a perfect electrical contact of practically negligible resistance is assured, this being a very important item, especially in wireless work. They also have the advantage of being very simple to construct, are practically indestructible, have no mechanical parts to wear, and are inexpensive.

Switches of this type are frequently used in experimental laboratories, but probably have not found more general favour on account of the use of mercury, which is so easily upset. This is overcome by using a plastic amalgam in the place of pure mercury, which, being made in a fairly stiff paste, is not easily upset, and can be picked up and replaced if accidentally knocked out. The amalgam consists of a combination of mercury and tin, or mercury and lead; the former is possibly the better as it amalgamates rather more readily, and there is not so much tendency to oxidise as with the lead, though lead amalgam answers quite well.

The best way to prepare the amalgam is to take by weight about two parts of mercury to one part of clean metal, and heat them together in a porcelain crucible or iron vessel—which must not be tinned—until the solid metal just melts. It should then be well stirred with a glass or iron rod to assist the thorough amalgamation of the two, and while still liquid any dirt should be taken off. When cold, the amalgam should be a fairly stiff paste, so that when a copper wire is inserted the amalgam will entirely close in around the wire. If, when the amalgam is cold, the paste is too stiff, a little more mercury must be added, or if too liquid a little more of the metal, and the whole again heated until it becomes just liquid. If there is no immediate hurry the amalgam can be made by putting the mercury and metal in a glass or earthen vessel and left for some time, an occasional shake or stir being given to assist the amalgamating.

It may be advisable to mention for the benefit of those who have not previously used mercury, that it will amalgamate with most metals, upon many of which it has a very detrimental affect. Care should therefore be taken to avoid their coming into contact with it or with the amalgam. After the latter has been standing in the cups for a time, without use, the top surface will often appear to be hard, but a slight stir with the connector, when inserting, will make it quite plastic again.

The bases for these switches and boards can be made either of ebonite or wood, and if the latter are thoroughly dried and impregnated with pure paraffin wax, the insulation will be very good. A good hard wood should be used, about ½ in. to ⅝ in. thick, teak being probably the best. When impregnating wood bases, they should first be dried out as far as possible in a warm oven, care being taken not to scorch the wood; they should then be entirely immersed in boiling paraffin wax, and left until all the air is driven off. The actual time required will depend upon the nature of the wood used. They are then taken out, the superfluous wax shaken off, and hung or stood on edge to dry; any wax adhering can afterwards be scraped off.

The general arrangement of all the bases is the same, consisting of holes or holes and slots, into which terminals are inserted. The holes can be made with either a wood centre bit or a twist drill. If a centre bit is used, care must be taken that the centre point does not go right through the base, except in the case where contact screws are to be inserted from below. The slots are easily made by drilling a series of holes side by side and finishing with a chisel or gouge. It will be found an advantage, and will also save time, to fix a depth gauge to the drill, to ensure that all the holes are the same depth.

Digitized by Google

This can be accomplished by slipping a metal or wood collar over the drill and fixing with a set screw as shown in Fig. 1. The diameter of the holes and width of the slots should be kept as small as possible, so as not to require too much amalgam. About $\frac{5}{16}$ in. will be found ample for the switches and $\frac{1}{4}$ in. or even less for the connecting boards. It is best to make the holes and slots fairly deep, say

Fig. 1.

Drill fitted with collar to control drilling depth.

about $\frac{3}{8}$ in., so that the amalgam is kept well below the surface of the switch, and thus less likely to be knocked out, only just sufficient amalgam being used to ensure a good contact. Any standard type of terminal will answer, and the screw should be just long enough for the tip to enter the cups and troughs. Fig. 2 shows in section a cup with the screw inserted.

If ebonite is used for the bases, the hole should be drilled and tapped, the terminal screw being dipped in shellac varnish and screwed up tight. The varnish, when set, will prevent any tendency for the screw to turn, and also will seal it to the ebonite and prevent any creeping out of the mercury. If taps are not available, the hole should be drilled slightly smaller than the terminal screw, the screw being warmed and inserted. The ebonite will become pliable when warm and will set firmly around the thread when cold.

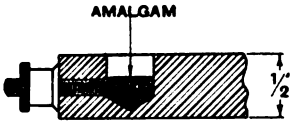

Fig. 2.

Section showing the cup and terminal making contact.

When wood bases are used, all the holes and slots should be made before they are impregnated with the wax, the holes for the terminal screws being made slightly smaller than the screw. These are inserted into the wood without any previous tapping, but they should be slightly warmed in order to melt the surrounding wax so that when cold they will be firmly sealed in. If the bases are not to be impregnated, the screws should be put in with shellac varnish in the same way as described for ebonite bases. The wood bases should previously have been well dried, and it will be advisable under these conditions to give them finally a good coat of shellac varnish all over.

The ends of all screws that project into the cups and troughs should be amalgamated with mercury before they are screwed into position; this will ensure the amalgam adhering to the screw to form a perfect electrical contact. The simplest method of doing this is to dissolve a very small quantity of mercury in a little nitric acid; dip the tip of the screw into the solution for a moment, and immediately wash thoroughly in water, when a fine deposit of mercury will be left on the part that was immersed in the liquid. The solution is very poisonous and must therefore be used with great care,

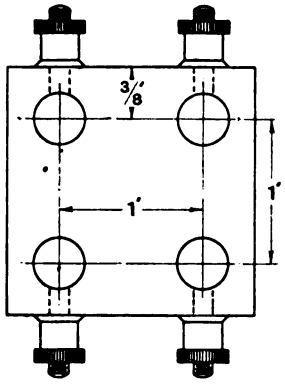

Fig. 3. *Plan view of base.*

and it should be kept in a glass stoppered bottle. If the ends of the screws have been lacquered, this must be cleaned off first, and should be kept free from grease until the amalgamating is done. If they are merely tarnished, the acid will remove that at the same time as the mercury is being deposited.

The four-cup base shown in Fig. 3 is probably the most simple, but at the same time it is an extremely adaptable type of connector. It consists of four cups at an equal distance from each other. Three types of connectors are used in connection with this base: a single, two-way of double-pole, and a two-way cross-over. The single way will be required in two sizes, one for straight over

Digitized by Google

connections, the other for diagonal connections. These connectors can be made either of fairly stout copper wire, say about 14 S.W.G., or of copper strip, the latter being probably the easier to mount up for the double-pole and cross-over connectors.

Fig. 4 shows two methods of constructing the single-way connector, the one of copper strip with an ebonite knob, the other of copper wire with a Systoflex sleeve. It is not absolutely essential to insulate the simple connectors, but it is preferable, as earthing through the body is avoided when making changes; also, where high voltages are used, there is less chance of a shock.

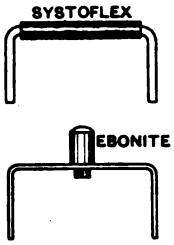

Fig. 4.
Single way connectors.

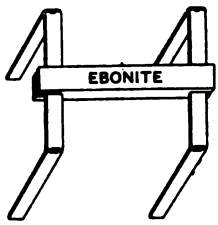

Fig. 5.
Double way connector.

Fig. 5 shows a simple double-way connector. The easiest way to mount these is to cut a slot with a fine hack saw in the end of the ebonite cross piece which will just take the strip; this can be held in by shellac, or better, can be drilled and pinned. If copper wire is used, a small hole should be drilled in which the wire makes a tight fit, being held with shellac or pinned.

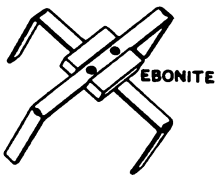

Fig. 6.

Fig. 6*a*.
Cross-over connectors.

Fig. 6 shows a cross-over connector, Fig. 6*a* showing the method of mounting. A small square of ebonite about ¼ in. thick has one limb fixed to the under side, the other being fixed to the upper side, which is better recessed to take it, so as to keep it well insulated from the body when handling. The ends of all connectors should be amalgamated where they enter the mercury cups and troughs, about ⅛ in. being quite sufficient.

It will be seen that any pair of cups can be connected by means of the single connec-

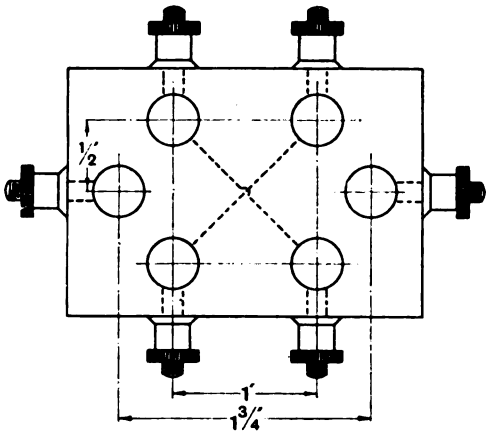

Fig. 7. *A six cup base.*

tors, so that circuits can be put in series or parallel or disconnected at will. Using the double connector it becomes a double-pole switch in either direction, and with the two-way cross-over it can be employed as a reversing switch.

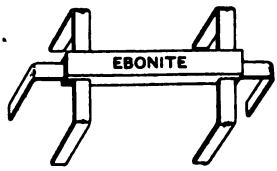

Fig. 8.

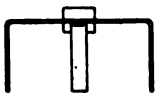

Fig. 8*a*.
Special forms of connector.

Fig. 7 shows another type of base containing six cups, with which a special type of connector is usually employed. This combination can be obtained commercially from any firm supplying physical apparatus, and

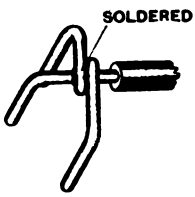

Fig. 9.
Connector formed of wire.

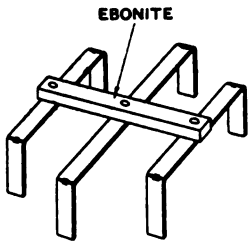

Fig. 10.
Diagonal connectors.

Digitized by Google

is known as a Pohl Commutator. The construction of the special connector is shown in Figs. 8 and 8*a*. It is somewhat similar to the double connector shown in Fig. 5, except that an extra limb is attached at each end,

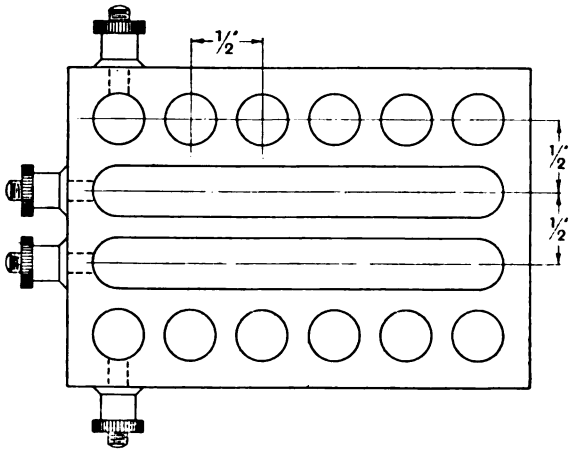

Fig. 11. *A simple type of connecting board.*

these being in electrical contact with the crossing limbs. These outer limbs act as a pivot for the connector, which is rocked over from one position to the other so that very rapid changes can be made.

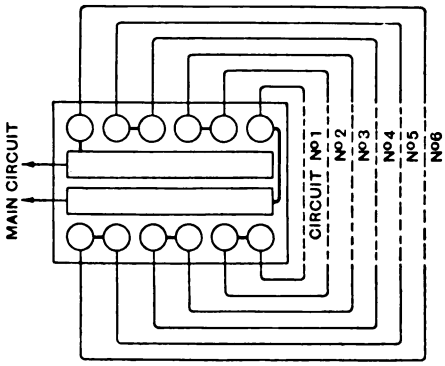

Fig. 12*a*. *Indicating the method of inserting connectors with all circuits in series.*

Fig. 9 shows a method of constructing a connector of this type with wire, the cross limb being a single twist around the end limb and soldered. The soldered portion must be well covered with enamel or paint to keep it from contact with the mercury, which would quickly act on the solder and spoil the joint. By connecting diagonally the two inner pair of cups with two single connectors, as shown by dotted line in Fig. 7, and still utilising the throw over, it becomes a double-pole reversing switch. The connectors described for the four-cup base can be utilised with this base, and a further type that will be found very useful is shown in Fig. 10, making diagonal connections and also making a good reversing device.

Fig. 11 shows a simple type of connecting board, in this case for six pairs of cups with two main troughs. Any pair of cups can be connected singly or in parallel to the troughs, or the cups can be arranged in series or series-parallel and connected to the troughs. Fig. 12*a* shows the manner of inserting the connectors for connecting all circuits in series, Fig. 12*b* all circuits in parallel, and

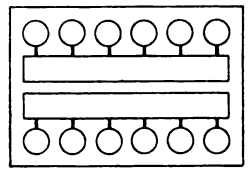

Fig. 12*b*. *Circuits in parallel.*

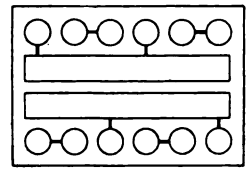

Fig. 12*c*. *Three circuits in series, paralleled to the cups.*

Fig. 12*c* three circuits in series, paralleled to the troughs. The external circuits have been omitted in Figs. 12*b* and 12*c*, but they would be the same as in 12*a*.

In conclusion, it might be mentioned that for small automatic switches or relays, mercury contacts are exceptionally good. They can be manipulated with very small forces, having practically no contact friction, especially if pure mercury is used, and quite heavy currents can be dealt with in the switching circuit if required. If currents are heavy enough to cause sparking, such as in the break of a highly inductive circuit, the cups can be filled up with paraffin which will prevent the contacts from burning.

Digitized by Google

Book Reviews.

OSCILLOGRAPHS. By J. T. Irwin, M.I.E.E. pp. 164 +xii. Pitman, 7s. 6d.

No one is better fitted than Mr. Irwin to write an authoritative book on this subject. For many years as a lecturer at the Central Technical College, as it was then called, he devoted his energies and his great experimental skill to improving the known types and devising new types of oscillographs. In the laboratory at South Kensington, oscillographs were always in daily use and senior students were always being initiated into new developments in hot-wire and electrostatic oscillographs or new ways of damping or otherwise controlling instruments of the Duddell type. The book under review is the long promised fruit of these activities, written in a simple style and covering the whole field of oscillographs, their theory, construction and use. The recent developments in Cathode Ray oscillographs are described fairly fully in a concluding chapter. There is a bibliography of the subject which should prove useful to those wishing to consult the original papers. The book is very fully illustrated.

G. W O. H.

DIE AUDIONRÖHRE UND IHRE WIRKUNG. By Dr. Gustav Liebert (Berlin, Hermann Meusser), pp. xiv.+126, with 66 Figs., M.5.80. (6 sh.)

This volume forms the fifth of a series on "Die Hochfrequenztechnik," edited by Dr. Carl Lübben. This is an admirable book on the principle, construction and use of the valve. It is intended for amateurs, but for those amateurs who wish to learn more of the subject than is given in the more popular books. At the same time, it is mainly non-mathematical. It is very clearly written and well illustrated and can be recommended to anyone with the necessary knowledge of the language. The book is divided into five sections, entitled "The Electromagnetic Wave," "Application of the Valve," "Properties of the Valve," "Principles of Operation," "Technical Construction and Use of Valves."

We have not read a better discussion of the relative advantages and disadvantages of the various types of valves now available, nor of the precautions which should be taken in using the various types.

The book concludes with a table giving the principal characteristics of the valves most in use by German amateurs. As this will undoubtedly be of great interest to English readers, we reproduce the table on the next page.

G. W. O. H.

ELECTRICAL ENGINEERS' DATA BOOKS. Vol. III. Radio Engineering with Special Sections on Telegraphy and Telephony. Wedmore and Reyner, pp. 258+cxciv.+xxii. 15s. Ernest Benn.

This volume is intended to be "a handy volume of reference which will be indispensable to everyone concerned with the technique of radio." It is made up as follows: Lists of contents and illustrations, 22 pages; Radio Data, 218 pages; Telegraphy and Telephony, 40 pages; Mathematical and Miscellaneous Tables, 42 pages; Electrical, Mechanical and Physical Tables, etc., 51 pages; Electricity and Magnetism, 30 pages; Wiring Rules, Regulations, etc., 70 pages. The book contains a lot of information, but the arrangement, indexing, type, etc., leave much to be desired. The last 70 pages appear to have little to do with the book under review and we do not know whether they are here under some strange idea as to the meaning of radio engineering or whether they have been dumped here for lack of room elsewhere in Vols. I. and II. The last three pages are headed Index to Vol. III.; but here again things are not what they seem, since the index only refers to the first 258 pages. Had the index merely ignored the wiring regulations, it would not have been so bad, but that it completely ignores the whole of Appendix A, containing 123 pages of electrical data, is very regrettable and quite inexcusable in view of the title of the book. As an example, we wished to look up the specific inductive capacity of ebonite and we searched the index for any reference to ebonite, or specific inductive capacity, or dielectric coefficient or constant, but all in vain. On writing to the author about it, he pointed out that it was in the book, but in the Appendix of data and therefore not in the index. The whole volume suggests a too hurried publication and a lack of care in checking data, in choosing suitable type—some of the mathematical data require a microscope to decipher them—in arranging tables and, above all, in a book of reference, in indexing. Tables should be numbered consecutively and not 37, 39, 38, 40, which is apt to lead the person wishing to calculate the resistance of a piece of copper wire from its weight in grains per yard—if there is such a person—to the conclusion that Table 39 has been omitted.

The book naturally contains a great amount of most useful information in the collection of which much time and trouble must have been taken, but it is a pity that a little more time and trouble were not expended in the final preparation of the volume.

G. W. O. H.

ERRATA.

April issue.

Page 245, 1st column, line 9 from bottom, *for* "dimming" *read* "dummy."

Page 247, 2nd column, line 22, *for* 8, *read* i_1.

Digitized by Google

PARTICULARS OF GERMAN AMATEUR VALVES.

(From *Die Audionröhre und ihre Wirkung*, by Dr. Liebert.)

No.	Type.	Maker.	Filament.			Anode Volts.	Ampl. Factor.	mA per Volt.	Diff. Resist.	Uses.
			Current.	Volts.	Watts.					
				TUNGSTEN VALVES.						
1	RE 11	Telefunken	0.5	2.8	1.4	50–70	8.3	0.15	65,000	DRA
2A	RE 71									
2	"A" ...	,,	0.5	3.5	1.75	30–75	10.0	0.2	50,000	,,
3	"C" ...	,,	0.5	3.0	1.5	30–75	10.0	0.2	50,000	,,
4	VT 17 ...	Tekade ...	0.52	3.5	1.5	40–90	8.0	0.25	32,000	,,
5	LEA 229	Huth ...	0.5–0.6	2.4–3.1	1.5	40–90	9.0	0.20	45,000	,,
6	Valvo-normal	Müller ...	0.45–0.5	3.0–3.5	1.5	20–100	8.3	0.2	42,000	,,
7	LV 27/90K	Lorenz ...	0.55	2.9	1.5	45–90	8.7	0.25	35,000	,,
8	AR 23 ...	Loewe ...	0.45–0.50	3.5	1.5	50–100	7.1	0.25	28,500	,,
9	VT 106 ...	Tekade ...	0.5	4.5	2.2	50–150	12.5	0.4	31,000	DRAL
10	VT 49 ...	,, ...	1.1	3.6	4.0	220	14.3	0.5	30,000	L
11	RE 88 ...	Telefunken	1.0	4.0	5.0	40–100	8.3	0.3	28,000	,,
12	BF ...	S. & H. ...	1.1	3.5	4.0	220	14.3	0.5	30,000	,,
				THORIUM VALVES.						
13	RE 78	Telefunken	0.07	2.5	0.18	40–80	8.0	0.3	25,000	DRA
	RE 79									
14	LA 74 ...	Loewe ...	0.06	3.0	0.18	50–100	10.0	0.25	40,000	,,
15	LA 75 ...	,, ...	0.15–0.17	2.0–2.5	0.35	50–100	10.0	0.25	40,000	,,
16	LA 101 ...	,, ...	0.3	3.8–4.0	1.2	60–200	12.5	0.8	16,000	,,
17	RE 83	Telefunken	0.2	2.5	0.5	50–100	5.0	0.4	12,500	,,
	RE 89									
18	L 06 ...	Lorenz ...	0.06	2.2–2.5	0.15	30–90	6.7	0.25–0.3	25,000	,,
19	L 09 ...	,, ...	0.09	2.0–2.5	0.25	30–90	6.7	0.25–0.3	25,000	,,
20	Valvo-Reflex	Müller ...	0.3–0.35	1.5–2.0	0.6	10–100	4.2	0.5	8,500	,,
21	Valvo-Okonom H	,, ...	0.06–0.07	3.5–4.0	0.25	20–100	6.7	0.6	11,000	,,
22	Valvo 201A	,, ...	0.25–0.27	5.0–5.5	1.2	10–100	6.0	1.0	6,000	L
23	,, 201B	,, ...	0.3–0.32	3.5–4.0	1.2	10–100	6.0	1.2	5,000	,,
24	,, C ...	,, ...	0.32	4.0	1.2	60–140	10.5	1.0	10,500	,,
				OXIDE VALVES						
25	VT 105 ...	Tekade ...	0.15	1.1	0.15	40–90	8.3	0.25	28,000	DRA
26	VT 107 ...	,, ...	0.15	1.5–1.8	0.25	40–90	10.0	0.45	22,000	RA
27	VT 110 ...	,, ...	0.15	1.2–1.6	0.20	40–90	10.0	0.40	25,000	DRA
28	VT 111 ...	,, ...	0.15	3.2	0.50	50–120	6.7	0.60	11,000	DRAL
29	VT 112 ...	,, ...	0.07	2.5	0.18	40–90	9.0	0.40	20,000	DRA
30	RE 84	Telefunken	0.25	1.5	0.35	50–100	3.3	0.4–0.5	10,000	,,
	RE 88									
	RE 95									
31	RE 86	,,	0.2	1.5	0.3	50–100	12.5	0.4	30,000	,,
	RE 96									
32	U 45 ...	Nickel ...	0.04–0.06	1.0–1.5	0.1	50–100	7.0	0.5	22,000	,,
33	U 110 ...	,, ...	0.15	1.8	0.3	50–100	6.3	0.4	16,000	,,
34	LE 244 ...	Huth ...	0.08–0.09	1.2	0.1	40– 90	10.0	0.25	40,000	,,
35	LE 245 ...	,, ...	0.2–0.23	0.9–1.0	0.2	50–100	9.0	0.20	45,000	,,
36	LE 251 ...	,, ...	0.56	1.5	0.8	60–200	7.0	0.80	9,000	L
37	LE 344 ...	,, ...	0.08	1.25	0.1	20–70	3.3	0.35	9,500	DRA
38	LE 252 ...	,, ...	0.50	1.8	0.9	200–220	14.3	0.55	27,000	L

NOTES.—Column 8. The amplification factors have been calculated from the "Durchgriff."
Column 9. This gives the slope of the grid-volts anode-current characteristic in milliamperes per volt.
In the last column, D = Detector, R = Radio-frequency amplifier, A = audio-frequency amplifier. L = Loud-speaker.

Digitized by Google

Correspondence.

Letters of interest to experimenters are always welcome. In publishing such communications the Editors do not necessarily endorse any technical or general statements which they may contain.

Another Question of Nomenclature.

The Editor, E.W. & W.E.

SIR,—All readers of *E.W. & W.E.* will be grateful for Col. Edgeworth's letter in your March issue and your editorial in the same number. In venturing to supplement what has been said on this important subject, I am concerned solely to simplify a rather complicated situation.

It is obvious at the outset that any notation must be adequate to the purpose, compact, and self-explanatory. The concepts to be represented, too, must be clear-cut and defined. Looking at the problem, one is conscious of much confusion of thought, due partly to the ill-defined nature of some of the symbols in current use. In particular is this true of the symbol "j" which so frequently occurs in so-called "vector notation."

It is a desideratum that any conventional representation for impedance should be applicable equally to R.M.S. and instantaneous values of voltage and current. In this respect, I submit, the j notation is defective. If we apply the operator $R+jX$ to the current vector I, we obtain

$$(R+jX).I=IR+j.IX,$$

which represents the sum of the two vector quantities IR and IX, of which the first is in phase with I and the second 90° ahead. If, however, we take instantaneous values

$$(R+jX).I \sin \omega t=IR \sin \omega t+j.IX \sin \omega t$$

which according to convention is written

$$=IR \sin \omega t+IX \cos \omega t$$

we must conclude that

$$j \sin \omega t=\cos \omega t$$

a result which, on the assumption that $j=\sqrt{-1}$ is algebraically untrue. The symbol j is, in fact, an operator, and the equation $j=\sqrt{-1}$ is misleading without qualification.

I would urge for the consideration of readers the desirability of replacing the symbol j by the fractional operator D/ω, a notation first introduced by the late Dr. Heaviside, and developed with striking success by Dr. Eccles in his work on C.W. Telegraphy. Although the symbol D is, of course, the differential operator d/dt, there is no question of introducing calculus methods, as the uses of D are sufficiently defined by the equations

$$D \sin \omega t=\omega \cos \omega t$$

$$D \cos \omega t=-\omega \sin \omega t$$

whence $$D^2=-\omega^2$$

In this notation, for R.M.S. values we have,

$$(R+(D/\omega)X)I=IR+(D/\omega).IX.$$

With the convention that the operator D/ω applied to a vector rotates it positively through 90°, we have the same result as by using j.

Taking, however, instantaneous values,

$$(R+(D/\omega)X)I \sin \omega t=IR \sin \omega t+(D/\omega)IX.\sin \omega t$$

which, according to convention, is written

$$=IR \sin \omega t+IX \cos \omega t.$$

We have now the consistent relation

$$(D/\omega) \sin \omega t=\cos \omega t$$

agreeing with the defining equations given above.

The simplifications obtained by the use of this notation are enormous, not least among its advantages being the extreme ease with which the operators LD and $1/CD$ and their combinations may be handled. Its chief merit, in the eyes of the writer at any rate, lies however in the entire absence from the notation of any necessary reference to the imaginary unit.

For the impedance operator $R+\frac{D}{\omega}X$, we may write (Z, ϕ), the brackets indicating the operational character of the symbols, and avoiding any necessity for special type. The ohmic impedance Z associated with this operator is written without brackets and denotes the quantity $\sqrt{R^2+X^2}$, while ϕ is, of course, $\tan^{-1}\frac{X}{R}$. The impedance operator thus denotes the presence of both Z and ϕ, a useful reminder which will prevent confusion with Z alone.

May I here be permitted a reference to the final sentence of your editorial, in which you refer to both $\sqrt{R^2+X^2}$ and $R+jX$ as expressions for "impedance"? In my submission, the important distinction between the two calls for special recognition, and the terms "ohmic impedance" and "impedance operator" respectively would, I think, supplement the convenient symbolic expressions Z and (Z, ϕ).

In conclusion, it is well to remember that all questions of impedance can ultimately be expressed in terms of sine and cosine. The Heaviside operator enables us to shorten the work efficiently, and more important still, logically.

W. A. BARCLAY.

Murtle, Aberdeenshire.

The Editor, E.W. & W.E.

SIR,—Questions of nomenclature are partly questions of convenience and partly questions of usage, and they are necessarily matters of opinion. Your Editorial suggestion that the word impedance should be applied to all combinations of resistance and reactance has undoubtedly a good deal to recommend it.

The principal object of my letter, however, was to draw attention to the inconvenience which arises when the same word is used without qualification in several different meanings. The question, "What is the impedance of a circuit," should admit of only one answer and not of several answers. If, therefore, the word impedance is applied to the expression $[R+j(L\omega-1/C\omega)]$, it should be qualified by

Digitized by Google

calling it operator impedance, complex impedance, or something of that sort.

The word operator does not appear to make a very happy adjective although it has no doubt been so used to a considerable extent.

K. E. EDGEWORTH.

Bexley Heath.

Valve Nomenclature.

The Editor, E.W. & W.E.

SIR,—May I endorse, with a reservation, Professor Howe's suggestion of the term "differential resistance" for what is frequently misnamed the "impedance" of a valve? It certainly should be called Resistance, implying that there is no phase-difference between current and E.M.F. (I believe the time-lag in an R valve with 70 volts on the anode is of the order of 2×10^{-9} seconds); but I would suggest "Slope-resistance" as an improvement, because:—

(A) It is shorter to say or to write.

(B) It may claim priority of use. ("Slope-Conductance" was used in 1921, *Wireless Telegraphy and Telephony*, L. B. Turner.)

(C) "Slope" is a less terrifying and mysterious word than "Differential" to the non-mathematical mind.

With reference to Col. Edgeworth's letter in the March issue, "Complex Resistance" is, I suggest, definitely wrong; "Resistance" implies no phase-difference between P.D. and current; it must be something which, when multiplied by the square of the current, gives power (I^2R). "Complex Impedance," is the proper term for $R+j(\omega L-1/C\omega)$. (See, for example, Prof. Kennelly's "The Application of Hyperbolic Functions to Electrical Engineering Problems.")

Col. Edgeworth's own definition of "Impedance" as "The terminal voltage of an A.C. circuit divided by the current" leads, indeed, to a complex quantity, unless the voltage and current are in phase (when the "impedance" reduces to a pure resistance).

For, let $e=E.\cos\omega t = E.\varepsilon^{j\omega t}$ be the terminal voltage; and let $i=I.\cos(\omega t-\phi)=I.\varepsilon^{j(\omega t-\varphi)}$ be the current; then the expression for "impedance" by Col. Edgeworth's definition is:—

$$\text{Impedance}=\left(\frac{E}{I}\right)\varepsilon^{j(\omega t-\omega t+\phi)}=\frac{E}{I}\varepsilon^{j\phi}=Z\varepsilon^{j\varphi}=\mathbf{Z}.$$

The part of this expression E/I represents the numerical value of the impedance, no regard being paid to phase-difference; it is the "Modulus" of the complete expression; while the part $\varepsilon^{j\varphi}$ signifies that the terminal voltage leads the current by an angle ϕ, it is the "argument" of the complete expression.

Strictly speaking, therefore, the word "impedance" alone should refer to the complete complex expression, it might be referred to at greater length as the "Complex impedance"; while the term "Modulus impedance" might be used for E/I; though unless confusion is likely to arise in any particular case, the simpler word Impedance may well be used for both, as at present.

In any case, when using symbols, it is easy to print all vector or complex quantities in Clarendon type $\mathbf{Z}$ (or in manuscript to overscore, $\bar{Z}$); using ordinary Roman or Italic Type (Z, z) for quantities essentially real, or for moduli; and, after all, it is more important for symbols to be unambiguous than for words, for symbols are a universal language.

C. R. COSENS.

Cambridge.

Transformer Curves.

The Editor, E.W. & W.E.

SIR,—After reading Mr. Appleton's further letter in the January issue of *E.W. & W.E.*, may I be allowed to give my views on the subject? I have no commercial interest in any components.

I can bear out Mr. Appleton's statement that with *extremely weak* input values, resistance coupling will actually give greater amplification than transformer coupling. However, Mr. Appleton seems to admit that the amplification factor of a well-designed intervalve transformer does not fall off appreciably until the input values become *minute*. Now, who on earth would think of L.F. amplification under these conditions for Broadcast reception? In order to obtain efficient and distortionless rectification by means of crystal or anode rectification, it is necessary to have a good H.F. amplitude, sufficient in my opinion to give good phone strength without L.F. amplification. In these circumstances I think Mr. Appleton's contention that minute input values are all important falls to the ground. If grid rectification is used, I do not think that quality in the L.F. amplifier is of great importance. There is another point we must not overlook, that is the steady magnetising current in the anode circuit, which surely brings the permeability to a reasonable value.

Derby. H. H. DYER.

Power Loss in Condensers.

The Editor E.W. & W.E.

SIR,—I have read Mr. Hartshorn's excellent article on "Power Loss in Condensers" with great interest, but am still in the dark in regard to certain points in the measurement of the power factors of air condensers at radio frequencies. I should therefore like to put the following question:—

Has the power factor of an air condenser of capacity less than 200$\mu\mu$F ever been measured at radio frequencies without assuming another air condenser free from loss?

I am aware of Mr. Wilmotte's work (*Proc. Roy. Soc. A.*, Vol. 109, p. 508, 1925), in which he measures the losses in mercury coils apart from the losses in an associated condenser and thence deduces the losses in the condenser, etc.; but if I have interpreted his results correctly, the method has only been applied to condensers of capacities greater than about 600$\mu\mu$F.

Claygate, Surrey. S. BUTTERWORTH.

Digitized by Google

From the World's Wireless Journals.

Abstracts of Technical Articles.

R000.—WIRELESS IN GENERAL.

R038.—DEFINITIONS OF TERMS, ETC., USED IN RADIO ENGINEERING. (*Supplement to Proc. I.R.E.*, February, 1926.)

This is a report of the Institute's Committee on Standardisation for 1926. It is in the form of 240 definitions of terms used in radio engineering, arranged under the headings, (1) Waves and Wave Propagation; (2) Transmitting; (3) Receiving; (4) Vacuum Tubes; (5) Circuit Elements and Properties; (6) Antennæ; (7) Direction Finding. Standard Graphical Symbols are also illustrated.

R100.—GENERAL PRINCIPLES AND THEORY.

R113.—TRANSATLANTIC RADIO TELEPHONE TRANSMISSION.—Espenschied, C. N. Anderson and A. Bailey. (*Proc. I.R.E.*, February, 1926.)

A report upon two years' measurement of Transatlantic signals, etc., preparatory to the arrangements for commercial telephony. The measurements were initiated to show the conditions obtaining throughout the twenty-four hours of the day and the various seasons of the year. The work was done under the auspices of the American Telephone and Telegraph Company, The Bell Telephone Laboratories, and the Radio Corporation of America on the United States side, and on the British side by the International Western Electric Company and the G.P.O. In America measurements were made at three stations on signals from Northolt on 52,000 cycles, and from Leafield on 34,130 cycles and 24,050 cycles. In England, measurements were made at New Southgate and Chedzoy, Somerset, on the transmissions from Rocky Point 2XS on 57,000 cycles, Marion WSO on 25,700 cycles and Rocky Point WQL on 17,130 cycles.

Data are available from 40,000 individual measurements, and have been subjected to careful analysis to disclose what physical factors affect radio transmission.

Curves of the field strength for 24 hours received at America and at England are shown. These are seen to be subject to substantially the same decimal variation and the conclusions drawn are: (1) Relatively constant field strength prevails during the daylight period; (2) A decided drop accompanies the occurrence of sunset in the transmission path; (3) The advent of night time conditions causes a rapid rise to high values, which are maintained until daylight approaches; (4) The encroachment of daylight on the eastern terminal causes a rapid drop. This drop sometimes extends into a morning dip similar to, but smaller than, the evening dip. After this, relatively steady daylight strengths again obtain. Monthly average curves for all months of the year are shown, the chief features shown being: (1) The continuance of the high night-time values throughout the year; (2) The persistence of the night-time values for a longer period in winter than in summer; (3) Daylight values show comparatively small range of variations; (4) The extreme range of variation between the minimum sunset dip and the maximum night value is 1 to 100 in field strength, or 1 to 10,000 in power ratio.

General consideration of the results gives a transmission formula of the usual form, but with the constants shown as compared with other values (due to Sommerfeld, Austin-Cohen, Fuller, etc.). This may be written in the usual form

$$E\,(\mu v/m) = \frac{377HI}{\lambda D}\,\varepsilon^{-\frac{0.005D}{\lambda^{1.25}}}$$

or in terms of power.

$$E = \sqrt{P}\,\frac{298\times 10^3}{D}\,\varepsilon^{\frac{0.005D}{\lambda^{1.25}}}$$

Where P is radiated power in kilowatts, D distance and λ wavelength, both in kilometres.

A correlation was sought between wireless transmission and the earth's magnetic phenomena, and result curves are given, showing close correspondence.

The paper next considers atmospheric measurements. Curves are shown for U.S.A. and for England of the atmospheric strength received on three different wavelengths. The distribution of light and dark over the communication path is very fully considered and it is concluded that the major source of atmospheric disturbance on long waves, both in England and in U.S.A., is indicated to be of tropical origin. In general the disturbance due to Xs is less on the higher frequencies, *i.e.*, shorter wavelengths. At night the decrease with increase of frequency is exponential. In daytime, the decrease with increase of frequency is linear in the range of 15 to 40kC. The difference between day and night is apparently due largely to daylight attenuation.

The ratio of signal to atmospheric is then dealt with. It is concluded that the effect is generally similar on both sides of the Atlantic. Curves are given for results on 5,700 and on 17,130 cycles. It is noticeable that although the latter (*i.e.*, longer wavelength) gives generally lower ratio of signal to atmospheric, it is more level and stable.

Lastly, experiments are described on both sides on the use of a Beverage antenna in place of an ordinary loop. Result curves show an average improvement in the Signal to Atmospheric ratio of about 5 as compared with loop reception. Test of percentage reception of disconnected words understood also shows considerable improvement.

A large number of signal strength curves is appended.

Digitized by Google

R113.—Some Studies in Radio Broadcast Transmission.—R. Brown, De L. K. Martin and R. K. Porter. (*Proc. I.R.E.*, February, 1926.)

An abstract of this paper—prepared from the account given in the *Electrician* of 12th February, 1926—appeared in *E.W & W.E.* for April, 1926.

R113.—Sur la Propagation des Ondes Courtes Emises à Bord du "Jacques Cartier."—General Delcambre and R. Bureau. (*Onde Elec.*, February, 1926.).

The paper described extensive observations on transmissions (chiefly of meteorological messages) from the *S.S. Jacques Cartier*, on waves of 115 metres downwards. Six voyages were made as follows: (1) 30th October, 1924—31st January, 1925. Bordeaux to Panama, Vancouver, Panama to Le Havre—115 metres; (2) 20th February—4th April, 1925, Le Havre, Galveston, Pensacola, to Le Havre—115, 62, and 48 metres; (3) 26th April—11th May, 1925, Le Havre to Mobile—115 and 31 metres; (4) 24th May—9th June, 1925, New Orleans to Le Havre—115, 31 and 21 metres; (5) 10th—30th August, 1925, Le Havre, Mobile, Le Havre,—31 metres; (6) 26th October—17th December, 1925, Le Havre, Pensacola, Galveston to Le Havre—31 metres.

In the second section of the paper is considered the effects of the time of day. About sunrise in France there was generally an interruption of the reception from great distances. A table shows the steadiness of this effect as noted for 10 successive days on one of the voyages. The most unfavourable time was about mid-day, "as if" (to quote the authors) "the local meridian was an obstacle to propagation. The reappearance in the afternoon or evening seemed to vary within wider limits than the disappearance of the morning, and seemed also to depend more on the wavelength. In a section on geographical influences, it is stated that the north and south regions of transatlantic transmission show different characteristics. A great circle from Paris to south of the Banks of Newfoundland, Cape Hatteras and Florida to the Gulf of Mexico shows roughly the line of division. South of this the transmissions on different wavelengths were easily received in France; north of this they were either not received or received irregularly.

In the last section, reference is made to the fact that the same transmission from the ship was very differently received by different receiving stations, sometimes being subjected to considerable variation in the course of a single meteorological message. The actual transmissions being held steady, this is attributed to deformation of the waves in transit. Considerations of the appearance and disappearance at certain points suggest that this effect travels or migrates with a velocity of the order of 60 kilometres per hour. This is the mean rate of propagation of meteorological phenomena and the need for correlation between meteorological and radiotelegraphic observations is urged.

R113.1.009.—The Mystery of Fading. Dr. O. Hall. (*E.W. & W.E.*, April, 1926.)

R114.—The Present Status of Radio Atmospheric Disturbances.—L. W. Austin. (*Proc. I.R.E.*, February, 1926.)

A short review of the present position of knowledge of atmospherics. References are made to various recent works on atmospherics in America and Europe, especially to work of the Radio Research Board. It is stated that the differences of opinion mentioned in the paper show that there is still much to be done on the subject. The author sums up the position as follows: (1) In general, atmospherics are stronger at the longer wavelengths; (2) Except for local storms, they are nearly always stronger in the afternoon and night, while for the higher frequencies this increase is confined usually to night alone; (3) They are stronger (*a*) in summer than in winter, (*b*) in south than in north, (*c*) on land than on sea; (4) A large proportion are directive, *i.e.*, to come from definite regions, such as mountains, rain areas or thunderstorms. It is also reasonably certain that: (5) Most of the long wave disturbances travel along the earth with a practically vertical wave front; (6) A considerable portion are oscillatory in character, though a certain portion are non-oscillatory and give short excitation at all wavelengths; (7) Disturbances sometimes occur simultaneously at stations thousands of miles apart.

R141.1—Notes on Wireless Matters. Steadiness in Transmitter Frequency.—L. B. Turner. (*Electrician*, 12th March, 1926.)

The article deals with the need for steadiness in transmitter frequency to prevent interference effects. After briefly reviewing the general use of resonance as applied to a spark transmitter, the writer considers the case of a modern C.W. transmitter working at hand speed. It is shown that with a receiver circuit decrement of 0.005, the signal strength is halved by a distune of 0.14 per cent., hence a C.W. transmitter should not vary in frequency by as much as this value. Additional consideration of heterodyne note and the L.F. end further demands great steadiness. The cases specifically considered are about 15,000 metres, which is a very congested region in the commercial spectrum. A frequency difference between stations of only 200 cycles per second may be allowed. The effects of frequency variations from a desired station and one or two jamming stations is then illustrated numerically and it is concluded that stations of such wavelength should not wander in frequency by anything like 20 cycles, *i.e.*, 0.1 per cent. The article concludes by describing a recent German method of measuring fluctuations of frequency. Measurements were made on 39 transmitting stations; 10 to 12.5 cycles per second is regarded as the largest permissible frequency wandering, irrespective of wavelength, corresponding to 0.05 per cent. at 15,000 metres. Taking this permissible maximum as 100 per cent., about half the stations showed under 50 per cent.; the maximum variation was 208 per cent. for Grodno, and the minimum 22 per cent. for Kootwijk.

R144.—High Frequency Resistance.—P. K. Turner. (*E.W. & W.E.*, March, 1926.)

Digitized by Google

R144.—EFFECTIVE RESISTANCE OF INDUCTANCE COILS AT RADIO FREQUENCY. PART I.—S. Butterworth. (*E.W. & W.E.*, April, 1926.)

R145.5.—POWER LOSS IN CONDENSERS.—L. Hartshorn. (*E.W. & W.E.*, April, 1926.)

R200.—MEASUREMENTS AND STANDARDS.

R201.—AN EXPERIMENTER'S WIRELESS LABORATORY—L. A. Sayce and J. Taylor. (PART II.—*E.W. & W.E.*, March, 1926. PART III.—*E.W. & W.E.*, April, 1926.)

R208.6.—A METHOD FOR GENERATING AND MEASURING VERY WEAK RADIO-FREQUENCY CURRENTS.—W. van B. Roberts. (*J. Franklin Inst.*, March, 1926.)

The chief method described is based on the fact that when two oscillatory E.M.F's are impressed in series upon a circuit containing an assymetric conductor (a detector) or its equivalent, the resulting current contains in general components of the following frequencies: (A) Zero frequency or D.C.; (B) Twice each of the impressed frequencies; (C) The sum of the impressed frequencies; (D) Their difference. It is shown (in an appendix) that under certain conditions, a simple relation exists between the value of the D.C. component and that of the frequency difference component or "beat frequency," and that the

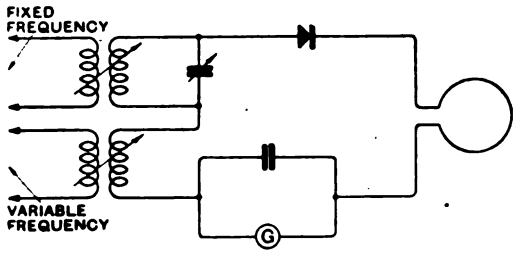

Fig. 1.

amplitude of this beat frequency may be accurately inferred from measurement of the D.C. component. One frequency may be kept constant and the other varied to produce beats, 3,000kC being quoted as a convenient fixed frequency with which the variable can produce beats up to 1,000kC. The fixed frequency may be modulated if necessary. Fig. 1 shows a simple scheme of applying the arrangement, while a further arrangement, using an amplifier in each component and a valve rectifier, is also illustrated in the paper.

An alternative arrangement is also illustrated and described, using only one oscillatory frequency. It is shown that rectification will then produce a double frequency current, whose value is approximately equal to that of the D.C. current, and this double frequency component is used as the desired current. A third arrangement is also described using rectification in the grid circuit of the generating valve, and employing the second harmonic as the desired frequency.

It is concluded that for the production of the very smallest currents the first system is complex but ideal, while the last, due to its simplicity, should be valuable in portable measuring sets.

R240.—INDUCTANCE COILS QUANTITATIVELY COMPARED.—A. L. M. Sowerby. (*E.W. & W.E.*, April, 1926.)

R251.5.—A VERSATILE GALVANOMETER.—*Electrician*, 5th March, 1926.)

A description of the "Versatile" galvanometer and its accessories. The instrument is of the well-known Paul "Unipivot" pattern (made by the Cambridge Scientific Instrument Co.). Details are given of the constants of the instrument and the volt range and ampere range multipliers available. Ranges of 0.24 volt to 600 volts and of 0.012 amp to 24 amps are possible. Details are also given of available thermo-junctions for A.C. measurements, and mutipliers given ranges of A.C. voltage from 1.2 to 120 volts and A.C. currents from 1.2 to 24 amps.

R300.—APPARATUS AND EQUIPMENT.

R321.—RADIO RECEIVING AERIALS.—P. D. Tyers. (*Elect. Review*, 26th March, 1926.)

The writer draws attention to the carelessness frequently displayed in the erection of an aerial, and emphasises the points to be noted in the erection and leading in to the set.

R330.—LES PROGRÈS RÉCENTS DANS LA CONSTRUCTION DES LAMPES À PLUSIEURS ELECTRODES.—R. Jouaust. (*Onde Elect.*, March, 1926.)

A lengthy paper on the present position of the valve. The general principles of thermionic emission are first discussed, and the laws of emission traced from Richardson's fundamental equation. The function of thoriating is then considered, and the process of thoriation described. The power, ful emission is not due to the properties of thorium but to the difference of potential at the thorium-tungsten surface of contact, which facilitates the emission of electrons. The thorium surface is very sensible to traces of gas in the bulb, which produces ionisation, the positive ions bombarding the filament and tending to destroy the thorium coating. The necessity for the removal of all gas from the electrodes, etc., is considered, and the use of magnesium as a "getter" is described. It is pointed out that for valves of the same geometry the characteristic with a thoriated filament is not exactly the same as that with a tungsten filament. The contact potential difference in the former case has the effect of moving the characteristic to the right by an amount equal to about 1.5 volts of grid potential. The general properties and behaviour of dull emitter filaments are considered reference being made to various recent fundamental tests.

Valve noises are then considered, with their effect in limiting amplification. The noises are distinguished as (A) "a continuous breathing like the sound of waves," (B) crackles. The former is attributed to traces of gas remaining in the valve. The cracklings seem to proceed from the filament, and have also been attributed to inequalities

Digitized by Google

of electron absorption by the grid. The Schottky effect is discussed in some detail. This suggests that abrupt changes of anode current are not due to accidental causes, but constitute a physical phenomenon characteristic of thermionic emission. Secondary emission is then considered at some length. The literature on the subject is contradictory, and experimental tests with different valves give widely different results. The general effects of initial velocity, space charge and secondary emission are reviewed. Excessive grid potential is undesirable, resulting in heating of the grid without increase of anode output. It is pointed out that the maximum grid voltage should never exceed 80 per cent. of that of the anode.

The paper next deals with very short waves generated by means of the valve. Experiments by Professor Whiddington in 1919 are referred to when oscillations corresponding to 77 centimetres wavelength were generated *within* a soft valve. Similar results have been found possible with hard valves. Work of Barkhausen and Kurz in Germany, and of Gill and Morrell in England, are discussed. (Certain of the latter work has already been described in *E.W. & W.E.* for October, 1923.) The presence of oscillations was evidenced and their wavelength measured by Lecher wires. The wavelengths were of the order of 2 metres. The theory of the effects involved is discussed. A short note then follows on the effect of traces of gas in giving irregularity of characteristic, followed by a very brief note on the double-grid valve. The last section deals with new patterns of valves, etc. Large power valves with water-cooled metallic anodes are described, and the design of a stranded thoriated filament for transmitter valves is discussed. Finally a few remarks are given on the use of valves for short wave (*e.g.*, 20 metre) transmitters.

R342.5.—A Power Amplifier for the Low Powered Transmitter.—R. P. Turner. (*Q.S.T.*, March, 1926.)

The writer refers to the unsteadiness of amateur transmission frequencies, and emphasises the need for using a master-oscillator with a power-amplifier working to the aerial. The master-oscillator and power-amplifier elements are described. The oscillator is a Hartley circuit, with the operating key. The power amplifier is of conventional circuits, the inductance of the master oscillator being coupled to a coil in the grid circuit of the amplifier. A closed oscillatory circuit is included in the anode in the usual way and coupled to the aerial. The circuits described are for 40 metres, and details of components are given.

R342.5—Neutralising the Crystal Amplifier. —J. M. Clayton. (*Q.S.T.*, March, 1926).

It is stated that requests have been received for information as to the stabilising of the power-amplifier in a crystal controlled transmitter. The arrangement now described and illustrated is effectively that shown in Abstract "Practical Crystal-Controlled Transmitters" in *E.W. & W.E.* for March, 1926, (p. 192), where C_6 of .00025μF maximum capacity is shown as a neutralising condenser. The method recommended for determination of the correct adjustments for neutralisation is to insert in the closed oscillatory circuit of the Amplifier a thermal meter of 25 to 50mA maximum. Cut off the anode voltage of the amplifiying valve but leave the filament lit. The milliameter will probably show some deflection, indicating that there is "pick up" from the crystal oscillator. C_6 and the tapping on the inductance should be varied until there is no deflection on the milliammeter.

R342.7.—Note sue un Récepteur à Réglage Automatique. — J. Abelé. (*Onde Elec.* March, 1926.)

After reviewing the disadvantages of the usual arrangements of high frequency coupling and reaction, the author describes the circuit shown in Fig. 1 as a convenient method giving independence of tuning and of reaction controls. As the L_2C_2 circuit is independent of reaction adjustment, it can be calibrated and used as a tuning standard in the receiver. A milliammeter in the detector anode circuit affords control of the reaction condenser C_4, and permits tuning of the aerial to that of L_2C_2. This circuit can be set to a desired wavelength and oscillated by sufficient reaction. This

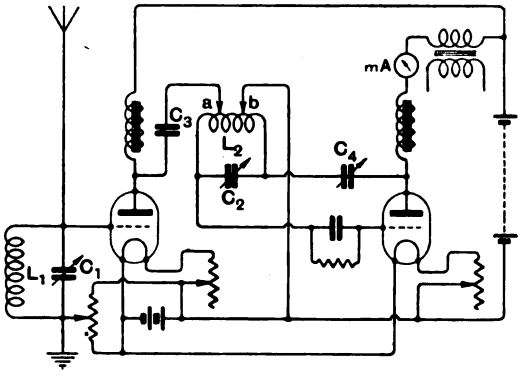

Fig. 1. *Récepteur réglage automatique.*

can be checked by extinguishing the first valve, the milliammeter dropping when L_2C_2 is oscillating, and returning to its normal reading on relighting the valve. The aerial can then be tuned until the milliammeter is again a minimum, when the aerial is in tune with L_2C_2. Reaction can then be loosened to eliminate self oscillation for the reception of telephony, or to a weaker oscillation for the autoheterodyne reception of C.W. signals.

R342.7.—A Modern Regenerative Receiver.— F. Anderson. (*Q.S.T.*, March, 1926.)

The receiver described is a "straight" three valve set, using a detector with reaction from its anode, and followed by two L.F. stages. Plug facilities are provided for the use of one or of three valves. The aerial is aperiodic and coupled to a tuned secondary. Details of construction are given, including a schedule of parts, panel lay-out, coil dimensions, etc.

Digitized by Google

R342.7.—LE RÉGLAGE DE LA RÉACTION DANS UN RÉCEPTEUR À CADRE.—E. Fromy. (*Onde Elec.*, February, 1926.)

It is pointed out that with a frame aerial the use of reaction is delicate and difficult in practice. The circuit shown in Fig. 1 is given as a suitable solution.

It will be seen that this turns the frame aerial *LC* into a self-oscillating system, whose oscillations can be controllably damped-out by the damping circuit (" amortisseur ") consisting of the resistance

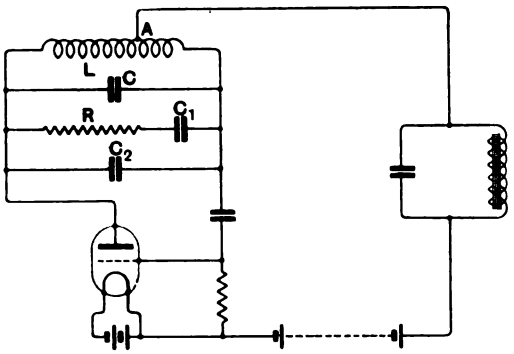

Fig. 1.

R and condenser C_1. Variation of C_1 varies the energy consumption in *R*, and therefore the damping of *LC*. A further condenser C_2 is preferably placed across the damper to compensate for change of tune, C_1 and C_2 being varied in opposite senses so that their total capacity remains constant. The controls of tune and of reaction are said to be practically independent of each other over a large tuning range.

C_1 and C_2 should be small condensers of about 0.0001μF maximum if used with a frame tuning condenser *C* of about 0.001μF maximum. The value of *R* may vary within wide limits, depending on C_1 and the position of the tapped point *A*. If *A* is near to the limit of extinction of oscillation, feeble damping will suffice and *vice versa*. A non-inductively wound coil of 2,000 ohms is stated to have been found suitable. The position of *A* is guided by the conditions that without the damper the circuit should oscillate at all values of the tuning condenser but the oscillations should be as weak as possible in order that they may be extinguishable by the damper. For a frame of 1 metre side the following typical positions are quoted.

Total turns 35,	Anode circuit 3,	Grid circuit 32.		
,, ,, 18,	,, ,, 3,	,, ,, 15.		
,, ,, 9,	,, ,, 2,	,, ,, 7.		
,, ,, 6,	,, ,, 2,	,, ,, 4.		

Grid condenser and leak are of the customary values.

R344.—FREQUENCY VARIATIONS IN THERMIONIC GENERATORS.—Lt.-Col. K. E. Edgeworth. (*J.I.E.E.*, March, 1926.)

Paper read before the Wireless Section, I.E.E., on 6th January. A lengthy abstract appeared in *E.W. & W.E.* for February, 1926.

After considering some properties of mechanical oscillating systems, *e.g.*, a pendulum, the author discusses the phase relationships of current and voltage in a valve oscillator, and shows that the frequency is affected by the nature of the coupling between the grid and anode circuits. Various types of coupling are considered, *i.e.*, normal inductive coupling, reversed coupling, capacity coupling and resistance coupling, and expressions for frequency derived. The design of an oscillator using the resistance method of coupling is then discussed, with practical notes on the adjustments. The next section deals with the design of an oscillator employing reversed coupling, the arrangements recommended being such as to employ part inductive and part capacitative coupling. The paper finally illustrates experimental results obtained with different types of circuit, and compares the characteristics of various types of constant-frequency generator.

R345.—LA RÉGULATION AUTOMATIQUE DE LA MODULATION DANS LES STATIONS D'EMISSIONS RADIOTÉLÉPHONIQUE.—O. de l'Harpe. (*Radio Electricité*, 25th February, 1926.

A description of a scheme of automatic regulation of modulation for broadcast transmission, stated to be in satisfactory operation at the station Radio Toulouse. It is pointed out that fortissimo and pianissimo passages, for example, call for different degrees of amplification, and that this has to be under the control of an operator.

The arrangement described makes this control automatic. It consists in interposing in the modulation amplifier an intermediate circuit containing a device whose resistance is not constant but is greater for higher voltages applied to it. The device used is a metal filament flash lamp bulb, whose resistance is shown in a curve to be about

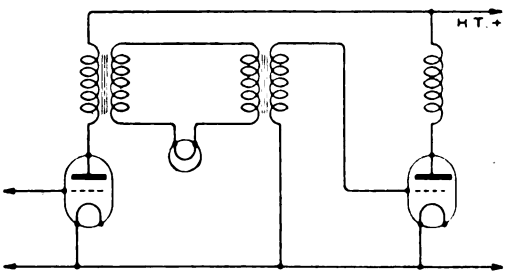

Fig. 1.

1.5 ohms when cold (or under very small applied voltages), and in the neighbourhood of 16.5 ohms when 3.5 volts are applied to it. The essentials of the scheme are shown in Fig. 1. The actual modulation arrangements used at Radio Toulouse are also illustrated, several lamps being used in parallel.

R351.218.—THE PIEZO ELECTRIC EFFECT AND ITS APPLICATION TO WIRELESS.—PART II.—C. W. Goyder. (*E.W. & W.E.*, March, 1926.)

Digitized by Google

R381.5.—PERFECTIONNEMENT DANS LES CONDENSATEURS VARIABLES.—C. Guével. (*Onde Elec.*, March, 1925.)

A note on a new pattern of slow-motion dial and control. Multiplications of 8, 12 and 18 are possible. The arrangement is also applicable to the motion of variometers, reaction controls, etc.

R386.—ESSAI SUR LA THÉORIE DES FILTRES ELÉCTRIQUES.—P. David.—(*Onde Elec.*, February, 1926).

A continuation and conclusion of the article in the previous month's issue (see abstract in *E.W. & W.E.*, April, 1926). The first case considered is the calculation of the current in a filter working to any impedance, followed by its particular adaptation to the impedance of a receiver. The effect of internal impedance in the supply source is then considered and it is shown that it is advantageous that this impedance should be equal to that of the receiver; *i.e.*, input and output impedances to the filter should be the same. The use of filters in wireless technique is then considered generally, the case illustrated being that of a filter whose input and output are transformers in anode and grid respectively. The article concludes by considering the effect of mutual induction between the elements of a filter system, and the effect of transient and damped phenomena, as distinguished from the sustained cases dealt with in mathematical considerations. A bibliography on filter literature is appended, along with a discussion on the paper before the Société des Amis de la T.S.F. on 20th January, 1926.

R386.—FINDING THE INDUCTANCE OF THE FILTER CHOKE.—E. W. Berry. (*Q.S.T.*, March, 1926.)

The method recommended is first to measure the ohmic resistance R of the coil, *e.g.*, with D.C. milliammeter and voltmeter. The total impedance Z can then be ascertained by using similar A.C. instruments with the supply mains. The calculation of the inductance from these quantities is then illustrated, and curves are given from which the inductance can be directly read from the value of $Z^2—R^2$, for 25 and for 60 cycles.

R386.—FORD COIL FILTERS.—C. Provins. (*Q.S.T.*, March, 1926.)

An article describing the use of Ford ignition coils as elements of a filter for amateur transmitter supply. The arrangement recommended is to use two secondary coils in parallel, when their joint resistance of 2,500 ohms is not serious in the anode circuit. As 1μF condensers are already built into the coils, these may be utilised for the complete filter, and a method is described and illustrated for doing so without dismantling the coils. Other filtering arrangements using these components are also discussed.

R387.1.—THE SHIELDING PROBLEM.—D. R. Clemons. (*Q.S.T.*, March, 1926.)

An extensive treatment of shielding effects, with results of a large number of experiments. The general effect of a non-conductor and of a conductor in proximity to a coil is first discussed, and the subsequent discussion confined entirely to measurements at wireless frequencies. Experimental results of H.F. resistance measurements are shown for two similar lengths of wire, one wound as a solenoid and the other as a layer coil, the latter having about twice the minimum (natural) wavelength and more than five time the H.F. resistance of the former. The proximity of a condenser to a coil is then considered. Placed inside the coil it increased the self-capacity of the coil from 4.4 to 9.05$\mu\mu$F, and the effective resistance at 1,200kC from 30.5 to 38.5 ohms with the plates closed and to 47.5 ohms with the plates opened. Near the coil in various positions—the maximum proximity being 0.6cm.—increases of H.F. resistance of 27 to 63 per cent. were shown. A metal sheet, 10 in. by 12 in., is then considered. With the plate 1cm. away from one end of the coil the self capacity increased 25 per cent. which was slightly augmented if the plate was commoned to the nearer end of the coil. Commoned to the other end it increased this capacity by 486 per cent., raising the natural wavelength from 76 to 186 metres. With a single layer spiral or pancake winding and the plate with its plane parallel to that of the coil at a distance of 1cm., the self-capacity increased 790 per cent., which dropped to 608 per cent. on commoning the shield to one end of the coil. A honeycomb coil of 8.4$\mu\mu$F self-capacity showed no change when the shield plate was 1cm. away, and an increase of 204 per cent. on commoning it to one end of the coil.

Experiments are then described on inductors in completely closed boxes. A solenoid completely enclosed in a metallic box of 8 in. by 8 in. by 5 in. was measured for H.F. resistance and self-capacity. Result curves for the former (up to 1,600 kilocycles) show an increase of 2 to 2½ times in the screen, and of 3 to 3½ times if one end of the coil is connected to the screen. Connection of the screen to one end of the coil increased the self-capacity from 4.4 to 34.2$\mu\mu$F, the other end giving only 13.6$\mu\mu$F. Similar measurements for a smaller and more compact coil show much smaller increases, while a spiral coil shows an increase of H.F. resistance of from 2½ to 3 times on enclosing in the box, increasing to over 3 as either end of the coil is commoned to the screen. Experiments are then described with sheets of copper and of lead. With two solenoids 1.7cms. apart, a current of 44 milliamperes was induced in the secondary with a lead screen midway between the coils. This dropped to 1.8 milliamperes on substituting the copper screen, while aluminium gave nearly the same result. Separating the coils by 12 cms. with the copper midway between them the secondary current rose to 6.3. It is concluded that a thickness of more than 0.02 in. does not better conditions and that completely enclosing a coil improves the efficiency so far as actual linkage is concerned. The article is also illustrated by several photographs showing the screening arrangements employed in various commercial receivers.

R387.7.—PORCELAIN INSULATOR MANUFACTURE.—(*Electrical Review, 5th-19th March*, 1926.)

A description of a visit to the works of Messrs. Taylor, Tunnicliff & Co., with illustrated remarks on the manufacture of various types and sizes of

Digitized by Google

porcelain insulators for wireless, telegraph, telephone and other purposes. Electrical tests are described and well illustrated by photographs of various insulators under test at commercial and radio frequencies.

R388.—A NOTE ON THE CATHODE RAY OSCILLOGRAPH.—Juichi Obata. (*J. Franklin Inst.*, March, 1926.)

A discussion of the arrangement (described by F. R. Terroux, abstract in *E.W. & W.E.*, February, 1926) of using a quartz window to permit external photography of short exposures. The present writer states that the sensitivity of the beam for ordinary dry plates can be somewhat improved, but is still inferior to the Schumann plate specially sensitised for cathode ray work. The difficulty of obtaining simultaneously high electrical and photographic sensitivities still remains.

R400—SYSTEMS OF WORKING.

R421.—THE LORENZ HIGH FREQUENCY SYSTEM FOR RADIO TRANSMISSION.—F. W. Gillard. (*E.W. & W.E.*, April, 1926.)

R460.—MULTIPLEX SHORT WAVE RECEPTION.—J. K. Clapp. (*Q.S.T.*, March, 1926.)

It is pointed out that the common use of the fixed-tune aerial circuit permits the use of multiplex reception under relatively simple conditions;

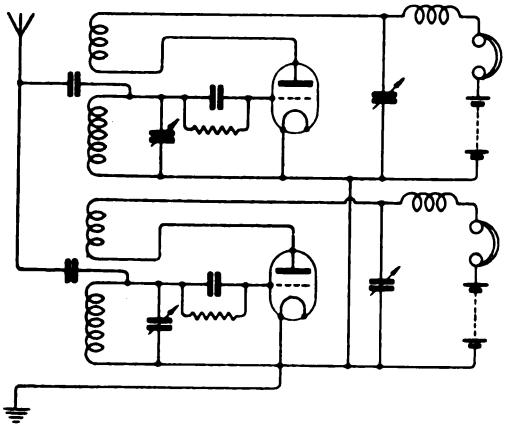

Fig. 1.

and that several receivers may be used on one aerial, even with the same L.T. and H.T. batteries. The circuit of Fig. 1 is shown for two different receivers. The coupling condensers should be very small. Split headphones can be used, one earpiece joined to each set, thus enabling simultaneous listening on two different wavebands. Arrangements are illustrated for a simple plug-and-jack arrangement for use of either or both earpieces, while a more elaborate switching arrangement is shown for the use of two telephones with four different receivers. The advantages of multiplex reception are discussed from the point of view of traffic improvement in relay work, and of observation of distances, fading, etc. on different wavebands. The arrangement is also useful in checking wavemeters, particularly on standard frequency signals.

R500.—APPLICATIONS.

R521.1.—RADIO AND THE SOUTH AMERICAN FLIGHT.—(*The Electrician*, 12th March, 1926.)

A description of the wireless D.F. receiving apparatus on the Spanish seaplane, "Ne plus Ultra," during its recent flight to South America. The metal construction of the machine adversely affected the receptive power of Bellini-Tosi or any other loops. Special arrangements had therefore to be made. The fore and aft loops consisted of two single turns arranged symmetrically on each side of the hull, and joined in series. For a wing coil of equal reception, a single turn loop was mounted in the plane of the wing. To increase reception for the small loops, it was found necessary to increase the overall amplification of the standard aircraft D.F. receiver. A 12-valve amplifier was divided into two units, the first containing 6 H.F. stages and a first detector, the second unit containing an oscillator two stages of intermediate frequency amplification, a second detector and note magnifier. Interesting details are quoted of the accuracy of the D.F. bearings obtained, and their great aid to navigation.

R545.—AMATEUR RADIO TO THE NORTH POLE AGAIN.—F. H. Schnell (*Q.S.T.*, March, 1920.)

A description of the apparatus to be taken for communication (by personnel of the American Radio Relay League) between the Detroit Arctic Expedition and stations in the United States. Photographs and circuit diagrams of the apparatus, which is highly portable, are shown. The transmitter uses two valves on the Colpitt's circuit arrangment, H.T. supply being by batteries of 300-400 volts. The tuning range is 24 to 78 metres. The receiver is a conventional three-valve set (detector and two L.F.), with reaction to the aerial.

R557.—TEACHING SPANISH BY RADIO.—(*International Telephone Review*, January, 1926.)

A description of an organised class of 15,000 persons who listen once a week for instruction by wireless in the Spanish language. The course of instruction teaches conversational Spanish to the students, with the aim of enabling them to travel in Latin-America and Spain, and converse in the native tongue. The transmission is from KOA, the Rocky Mountain Station at Denver, of the G.E.C.

A few other American broadcasting stations have similar but smaller classes for the study of the same language.

R800.—NON-WIRELESS SUBJECTS.

R533.85.—POMPE À CONDENSATION FONCTIONNANT SUR VIDE PRIMAIRE MÉDIOCRE.—L. Dunoyer (*Comptes Rendus*, 15th March, 1926.)

A description, with illustration, of a mercury-vapour condensation pump, capable of being used with a low backing vacuum, *e.g.*, 10-30 mm. of mercury, such as can be obtained from an inexpensive water-jet pump. Two stages of condensation pumping are provided from the one mercury vapour supply. A vacuum of 0.00001 of a millimetre of mercury is obtainable.

Digitized by Google

Some Recent Patents. [R008

SELECTIVE RECEPTION.

(*Application dates, 29th November, 1924, and 20th January, 1925. No. 248,087.*)

A rather interesting system of selective reception depending upon acoustic differentiation is described in the above British Patent by H. A. P. Littledale. Briefly, the invention consists in forming a beat note between incoming oscillations and a local oscillator, and causing the beat note to operate a single earpiece telephone receiver, which is connected to a sound column which resonates at

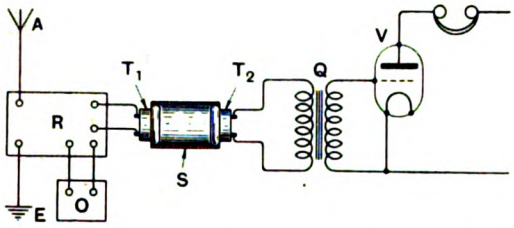

a definite frequency, a similar earpiece being placed at the other end of the sound column. This earpiece is connected either to an amplifier and telephone receiver, or another similar resonator. The accompanying diagram illustrates the idea very briefly. It will be seen that a receiver R is provided with the usual aerial A and earth E, and the local oscillator O. The frequency of the local oscillator is adjusted so that a beat note is obtained, the rectified output of the receiver and local oscillator being connected to the telephone receiver T_1. This is placed at one end of a tube or sound column S, while another telephone, T_2, is placed at the other end. The telephone T_2 is connected to the primary of a transformer Q, which in turn is connected to an amplifying valve V. This valve is shown provided with a pair of telephone receivers in the normal manner. The sound column S is tuned by moving one of the earpieces until the requisite length of air column is obtained. It is well known that the natural frequency of an air column which is closed at both ends is equal to half the wavelength. Thus, for a given frequency, that is, the pitch of the beat note, the length of air column for resonance can easily be calculated. The best beat note to use is that of the order of the natural frequency of the earpiece telephones. Under these conditions, if the diaphragm of the telephone T_1 is energised it will set the air column in the two into resonance, and the oscillations will impinge upon the diaphragm of the earpiece T_2, which will then respond at the same frequency. This will cause a potential to be set up across the ends of the windings which are connected by means of the transformer Q to the valve V. If now the diaphragm of the earpiece T_1 is energised at another frequency due to a different beat note caused by an interfering station, or, perhaps, a static or other similar interference, the telephone earpiece T_2 will not be affected to any material extent, since the sound waves within the air column at frequencies over that of resonance will be of very small amplitude, and consequently the diaphragm of the earpiece T_2, which, of course, is acting as a magneto-microphone, will not be affected to any material extent. The valve V can either be used as the last valve of the receiver, or the anode circuit may contain another resonator device, consisting, of course, of another earpiece similar to T_1. We should imagine that experimenters would find the system exceedingly useful for continuous wave reception when atmospheric disturbances are very bad. The specification is fairly detailed, and describes several modifications and uses of the system, such, for example, as measuring signal strength.

DETACHABLE PANEL LEGS.

(*Application date, 29th January, 1925. No. 247,725.*)

W. H. Liles and J. K. Pennington describe in the above British Patent specification the construction of detachable legs for supporting panels either required for experimental work, or particularly during the process of wiring. The idea of the invention can be seen by reference to the accompanying illustration. It will be noticed that the legs consist of a rod R provided with a screwed

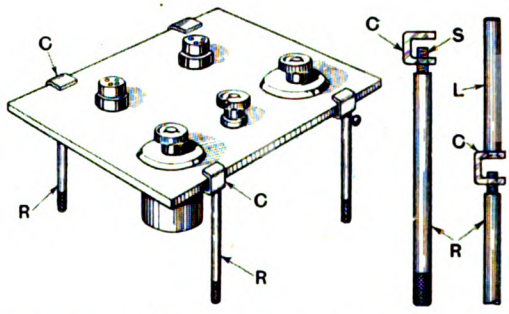

portion S, which co-operates with a thread in a small channel C. The legs are attached to the panel by placing the channel on the edge of the panel, and rotating the rod until the end of the screwed portion bites the under surface of the panel. Another modification of the leg consists in providing the channel C with another link or rod L, thereby enabling the panel to be inverted for the purpose of working on the opposite side.

CATHODE RAY RECEPTION.

(*Application date, 20th January, 1925. No. 247,344.*)

A system of selective reception embodying a cathode ray tube is described in the above British specification, No. 247,344, by C. Seymour, D.S.O.,

Digitized by Google

and C. A. Horton, B.A. The system functions by virtue of the fact that by applying the output of an amplifier to an arrangement of deflector plates associated with a cathode tube the cathode stream may be deflected, the deflection depending upon the nature of the applied voltages. The system is similar to the direct reading directional receiver of

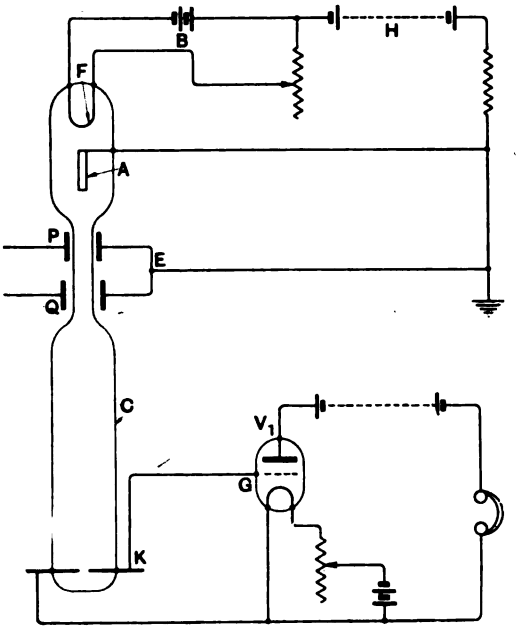

Watson Watt. The accompanying diagram illustrates the broad idea of the invention. *C* is a cathode tube comprising a filament *F* and an anode *A* of cylindrical formation, which tends to concentrate the cathode stream into a narrow beam. The filament is heated by the usual battery *B*, and the anode is connected to a high tension battery *H* through the usual resistance *R*, the anode being earthed. Two pairs of deflector plates are employed, *PE* and *QE*. The collector *K* comprises two wires separated by a distance of about 1 mm., the wires being connected between the grid *G* and filament of a valve V_1, which is associated with the usual telephones and batteries. Two directional loops, such as the well-known Bellini-Tosi combination, are connected through separate amplifiers to the deflector plates. For example, the anode circuits of the last valves may contain a resistance across which voltages will be produced, these voltages being transferred to the two pairs of deflector plates *PE* and *QE*. Thus, according to the phases and amplitudes of the two sets of voltages or deflection forces, so the nature of the deflection will vary. The cathode tube can then be rotated with respect to the deflector plates, the desired signal voltages thus causing the cathode stream to move with respect to the collector wires, this giving rise to potential variations in the anode circuit of the valve V_1. Thus it will be seen that undesired signals or atmospherics and other similar disturbances will give rise to totally different deflections, probably only causing the cathode stream to move about the collector wires while causing no change of potential to occur. The deflections, of course, is determined by the direction of the incoming signal and its frequency characteristic, and the phase relationship of the voltages.

A FOUR-ELECTRODE VALVE AMPLIFIER.

(*Application date, 27th November,* 1924. *No.* 248,076.)

A rather interesting method of utilising a four-electrode valve is described in the above British Patent granted to Marconi's Wireless Telegraph Company, Limited, and E. W. B. Gill. The invention simply consists in providing the inner grid with a fairly high positive potential so as to neutralise the effect of the space charge, and including in the inner grid lead an audio-frequency choke, very highly magnified voltages being set up across this choke, which are then applied to an ordinary valve, which may operate a loud-speaker. It is well known, of course, that if the anode of a four-electrode valve is made positive, and the potentials to be amplified are applied to the outer grid, and also if the inner grid is made positive the inner grid may be regarded as the output anode, and current in the inner grid circuit will vary in accordance with the outer grid potentials. If the relationship between the inner grid current and outer grid potential is plotted it is found that as the potential in the inner grid is increased by equal increments the outer grid current increases by decreasing amounts. It has been found that with certain types of valves and values of outer grid potential between certain limits the magnification is independent of the outer grid potential. The effect of this is as if the valve had an amplification factor which increased at a very rapid rate. Thus the valve is arranged as an amplifier in the manner shown in the accompanying illustration. The audio-frequency voltages to be amplified are applied by a transformer *T* to the outer grid G_2 of a four-electrode valve V_4. The anode *A* is given a positive potential by a battery B_1. The inner grid G_1 is connected through an impedance consisting of an audio-frequency choke *Z* to a battery B_2, a coupling condenser *C* being connected between the upper end of the choke and the grid of a three-

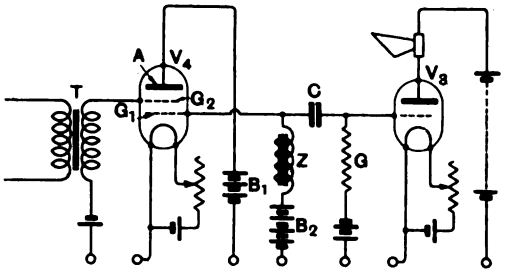

electrode valve, which is associated with the usual loud-speaker and batteries. The invention states that the overall magnification approximates to an inverse function of the frequency, and is very high for audio-frequencies. It is further stated that the

Digitized by Google

magnification is dependent upon the self capacity, or, rather, the capacity in shunt with the choke. In the case of the circuit shown the choke has in parallel with it through the coupling condenser the grid-leak *G*. This shunt path tends to produce substantially equal amplifications at all frequencies, and this is further helped by the fact that the choke is never theoretically a perfect one. A resistance, of course, can be substituted for the choke *Z*, but necessitates a higher battery voltage.

A POLYGONAL DIAPHRAGM.

(*Application date, 26th May,* 1925. *No.* 248,228.)

A very novel form of diaphragm construction and energisation are described by the Western Electric Company, Limited, in the above British Patent, a specification which all those who are

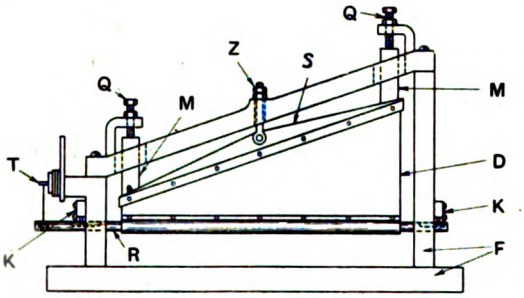

interested in the hornless type of loud speaker would do well to study. The diaphragm is made essentially in the form of a polygon, a trapezoidal construction usually being adopted. One modification is shown in the accompanying illustration, the diaphragm being in the form of a trapezoid. One long parallel side of the trapezoid is rigidly fixed, while the opposite side is provided with a means of energisation. Thus, in the illustration, a rigid framework and base *F* support the diaphragm *D*. The diaphragm is clamped along its upper edge to a support *S*, which is attached to the top of the framework by means of a screw *Z* and locking nuts. Two other screws and lock nuts *Q* are also fixed to brackets at each end, and co-operate with two members *M*. It will be seen that by adjusting the screws *Q*, *Q*, *Z* the diaphragm may be stretched more one end than the other, and also the tension as a whole may be varied. The lower end of the diaphragm is fixed to a rod *R*. This rod is carried on knife edge bearings *K*, at each end of the framework, this rod being used to drive or energise the diaphragm, and is linked to an ordinary telephone mechanism *T*. This is preferably of the Baldwin balanced type of armature, and is connected so as to tend to produce a rotation of the rod about the knife edges. In other words, a torsional effect is obtained which acts at right angles to the plane of the diaphragm. The diaphragm or sound radiator is preferably made of parchment paper, blotting paper, fabric, or light-weight metal such as aluminium. Another important feature of the diaphragm is its dimensions. The width of the narrow end should be approximately half the wavelength of the highest frequencies it is desired to obtain, while the other end should be half the wavelength of the lowest frequencies it is desired to obtain. At the higher frequencies the smaller end of the diaphragm will absorb and radiate to the air most of the vibrational energy, while for the lower frequencies the vibrations will tend to spread over the diaphragm as a whole, particularly towards the wider end of the area which is actually set into vibration while depending upon the frequency of vibration. Conversely, at the lower frequencies the sound impedance of the diaphragm will be low, and the energy will be transmitted along the rod to a point where the increased width will permit of resonance. Another interesting point is that the velocity of the sound in the driving member, *i.e.*, the rod *R*, may be made greater than that of the diaphragm, and consequently the distribution of the various components along this rod do not tend to produce any appreciable distortion owing to a time lag at the lower frequencies. The specification is very detailed, and describes several alternative forms of construction. Instead of making the diaphragm in the form of a plane it may be made hollow and stiffened so as to be polygonal in cross section.

A RECTIFICATION SCHEME.

(*Convention date* (*Australia*), *23rd August,* 1923. *No.* 220,942.

A rather peculiar arrangement of electrical apparatus which, it is claimed, rectifies, amplifies, relays and transmits is claimed by S. le F. Farvel in the above British Patent. The invention is best understood by reference to the accompanying illustration. A source of oscillations is applied to the primary winding *P* of a high frequency transformer, the secondary *S* of which is connected in series with a variable resistance R_1, which is also in series with a battery *B*, and windings *W*, arranged round the limbs of a permanent magnet *M*. The poles of the permanent magnet *M* are brought close together so as to concentrate the field. Located

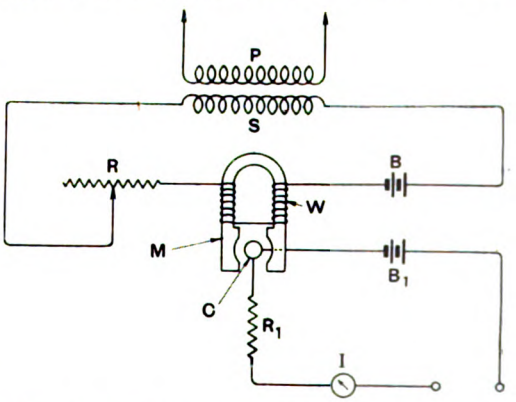

within the small air gap is a coil *C* made of bismuth or antimony alloys, the coil preferably being in the form of a ribbon. The coil is in series with another battery B_1, an indicator *I* such as a telephone or galvanometer, and a resistance R_1. It is stated that the passage of an oscillatory current through

Digitized by Google

the windings of the permanent magnet alters the distribution of the lines of force, and at the same time alters the resistance of the coil in the gap, thereby causing variation of direct current through the indicating device. It is stated that two or three arrangements may be used to act as amplifiers, and also the apparatus may be employed as a generator of oscillations.

A PUSH-PULL AMPLIFIER.

(*Convention date* (*U.S.A.*), *11th July*, 1924. *No.* 236,911.)

A method of connecting a four-electrode valve as a push-pull amplifier is described by J. C. Warner and The British Thomson-Houston Company, Limited, in the above British Patent No. 236,911. In the accompanying illustration a resistance R_1 is connected between the outer grid and filament of a four-electrode valve, *i.e.*, across a source of potentials to be amplified. Two resistances, R_2 and R_3 are connected in series. One end of the resistance R_2 is connected to the anode A, while the junction point is connected to a source of high voltage. The other end of the resistance R_3 is connected through a resistance R_4 to the space charge or inner grid. A load circuit, such as a telephone receiver or other indicating device, is connected across the free ends of the resistance R_2, and R_3, *i.e.*, across the points X and Y. The values of the resistance R_2, R_3 and R_4 are so adjusted that when any variation is applied across the resistance R_1 the current flowing through the resistances R_2 and R_3 are of such a value that the voltage drop across the two resistances is equal. In other words, there is no potential difference between the points X and Y. The object of the resistance R_4 is simply to lower the potential applied to the space charge grid. If, now, the potential of the outer grid increases due to a source of potentials to be amplified, the current flowing

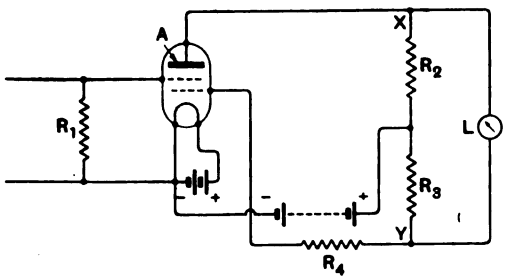

through R_2 will increase, *i.e.*, the potential of the point X will be lowered. Similarly, the current flowing through R_3 will decrease, which means that the potential of the point Y will be increased. Thus it will be seen that a current will flow through the load circuit L_1, thereby causing it to become operative. A modification of the invention provides for the amplification of alternating current, in which case the resistance R_1 is replaced by a transformer, and the two resistances R_2 and R_3 are replaced by a centre tap choke.

CONTROLLING A CONTINUOUS WAVE GENERATOR.

(*Convention date* (*France*), *10th September*, 1924. *No.* 239,856.)

A rather interesting system of controlling a continuous wave generator either for the purpose of keying, or maintaining constant frequency, is described in the above British Patent, which has been granted to Société Francaise Radio-Eléctrique.

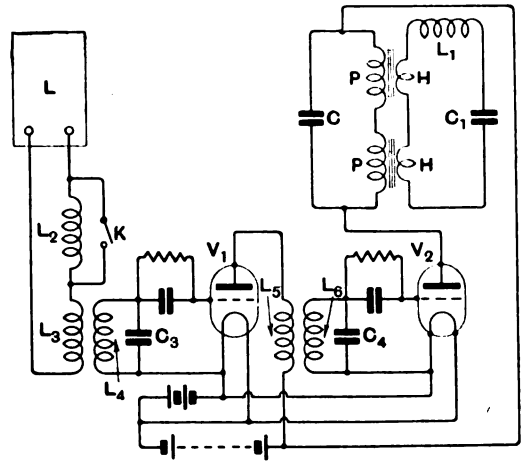

Briefly, the invention consists in beating the generator oscillations with those of a small local oscillator which is screened in a Faraday cage, rectifying the resultant beat current, rebeating at a lower frequency, and passing the rectified current through "saturation" chokes contained in the main oscillatory circuits of the generator. The main oscillatory circuits of the generator are shown diagrammatically as an inductance L_1 and a capacity C_1. Between this capacity and inductance are the high frequency windings of the saturation chokes, the primary P being shunted by a capacity C_2. A local screened and stable oscillator L is provided with two inductances L_2 and L_3, the inductance L_3 being coupled to an inductance L_4 tuned by a capacity C_3. Across the inductance L_2 is a key K, which short circuits the inductance, thus altering the frequency of the local oscillator. L_4C_3 is an oscillatory circuit tuned preferably to the mean frequency of the main emitter and the local oscillator, the frequency of which is slightly greater or less than that of the main oscillator. This is connected to a valve V_1, which acts as a rectifier. An inductance L_5 which offers a high impedance to the rectified beat frequency being contained within the anode circuit. This inductance acts as the primary of a transformer, the secondary of which, L_6 C_4, is tuned to a slightly higher frequency, and is suitably damped, with the result that another potential will be set up across them, which is again detected by the second valve. The anode circuit of the second valve contains the primary windings of the saturation chokes, which will then be traversed by a continuous rectified current, the value of which will be higher as the interference frequency

Digitized by Google

approximates to the natural frequency of the circuit L_6 C_4. Thus it will be seen that altering the frequency of the local oscillations by short circuiting the inductance L_2 causes a change in frequency of the main oscillator, whereas, conversely, if the frequency of the local oscillator is maintained dead constant the frequency of the main oscillator will also remain constant.

AN ELECTRO-DYNAMIC LOUD-SPEAKER.

(*Application date, 27th October*, 1924. *No.* 248,026.)

W. Dubilier and The Dubilier Condenser Company (1921), Limited, describe in the above British Patent the construction of an electro-dynamic loud-speaker of a rather novel type. Referring to the accompanying illustration it will be seen that the loud-speaker comprises an electro-magnet consisting of a core *C* provided with a central pole piece *P*. The core is also provided with three openings *O* and communicate with the sound conduit or horn *S*. An internal extension *X* of the core serves to hold a diaphragm *D*. The diaphragm comprises a light coil of aluminium or similar insulated wire, which is preferably interwoven with silk so as to act as a

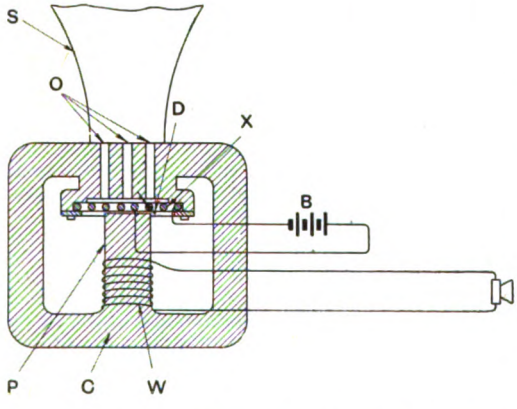

support and also tends to reduce any natural period. A central pole piece *P* is provided with a winding *W*, to which speech current is applied. The ends of the coil diaphragm are connected to a source of direct current in the form of a battery *B*. Thus it will be seen that there is a steady flux surrounding the actual diaphragm, due to the passing of the steady direct current, and when speech currents are applied to the windings *W* a considerable variation in flux will occur in the normal manner. This flux will link with that of the coil diaphragm, altering the attraction and repulsion, thereby causing the diaphragm to vibrate and thus energise the sound in the sound conduit.

AN ELECTROSTATIC MICROPHONE.

(*Convention date* (*Germany*), *9th July*, 1925. *No.* 248,255.)

The above British Patent, granted to Tri-Ergon Aktiengesellschaft, describes the construction of an electrostatic microphone, which should be of interest to experimenters. The difficulty of obtain-

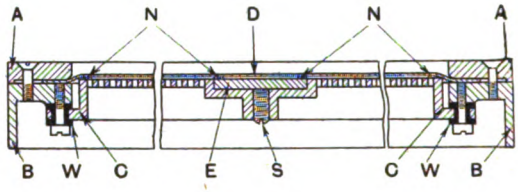

ing constancy is overcome by the method of mounting the diaphragm. In the accompanying illustration it will be seen that the diaphragm *D* of mica or similar material is covered with foil coating, and acts as one of the electrodes of the condenser. This is clamped between two rings *A* and *B*, the inner edge of the ring *A* being chamfered as indicated. The other electrode of the condenser comprises another ring *C*, which is fixed to the ring *B* by means of a screw and insulating washer *W*. Before the microphone is assembled the diaphragm *D* is stretched perfectly tight. It will also be noticed that the inner ring *C* comprising the other electrode is provided with a movable disc *E* adjusted by a screw *S*. Insulating washers *N* are inserted as shown. Thus it will be seen that on screwing the microphone together the insulating washers *N* will bear upon the mica diaphragm, causing the latter to become heavily stretched, the diaphragm taking up the position indicated. A similar adjustment, of course, is carried out by the middle disc and screw. The specification mentions that the co-efficients of expansion of the metals used for the various rings should be as nearly as possible equal so as to avoid any sagging or change in tension of the diaphragm.

Digitized by Google

EXPERIMENTAL WIRELESS & The WIRELESS ENGINEER

VOL. III. JUNE, 1926. No. 33.

Editorial.

Historical Wireless Apparatus at Munich.

A NEW science museum, known as Das Deutsche Museum, was officially opened in Munich a year ago. In it has been brought together a great amount of original apparatus illustrating the historical development of various branches of science, and the collections representing electrical science are so rich in original apparatus actually used by many of the pioneers whose names are now household words, that Munich will now have a still greater attraction for those tourists who to a love of art add an appreciation of scientific achievement.

There one can see the apparatus used by Otto von Guericke, Ampere, Ohm, Fraunhofer, Helmholtz, Hittorf, Röntgen, Hertz, and many others. Wireless telegraphy is very well represented, a room being specially devoted to this subject. Feddersen's apparatus, with which in 1862 he demonstrated the oscillatory nature of the spark discharge, was presented in 1906 by Feddersen himself, who personally superintended its installation. Some of the original photographic negatives of the spark discharges are shown.

In a neighbouring case is the apparatus with which Hertz first noticed the effect at a distance when a Leyden jar was discharged, and the apparatus with which in 1870 von Bezold demonstrated the nodes and antinodes of stationary electric waves on wires. Then we come to the original Hertz transmitter and receiver, presented to the Museum by the Baden Government, and a small collection of apparatus most of which was actually made by Hertz himself and presented by his widow in 1906. Here we see the original oscillators and resonators of various sizes and shapes, the wire cage polarisers, the large zinc parabolic reflectors, and the 12 cwt. pitch prism with which he refracted the waves.

The original Lecher wires of 1890 and the Arons tube of 1892 in which the Lecher wires are run in a vacuum are both here.

There is a collection of early wavemeters, including those of Zenneck, Slaby, Dönitz, Rendahl and Scheller.

Unfortunately, Braun's original coupled transmitter which he presented in 1906 was sent to America for Patent purposes during the war and has been lost, but an exact model has been made by Prof. Zenneck.

As an actual commercial transmitter of historical interest there is the Cuxhaven station, installed by Siemens in 1900 to work to Heligoland. All the subsequent developments are illustrated, including Poulsen's original laboratory arc transmitter, presented to the Museum in 1908. Among frequency doublers there is an experimental apparatus with rectifying cells made by Zenneck in 1899 and the original apparatus of Epstein (1902) and Goldschmidt (1908). There is also the original experimental Goldschmidt alternator giving 10 kilowatts at a frequency of 15,000. There is a very complete collection of the various types of detectors which have been employed at various times in the development of radio telegraphy, and naturally, thermionic valves in all their manifold applications are well represented.

Digitized by Google

The Correlation of Some Recent Advances in Wireless.*

By Balth. van der Pol, D.Sc. **[R010**

Section 1.

WIRELESS telegraphy and telephony are mainly based on the study of the theory of oscillations. Transmitters generally consist of an apparatus by means of which free oscillations are produced. Receivers on the other hand are principally designed to deal with forced oscillations, whilst the transmission through the intervening space between transmitter and receiver is a typical example of wave propagation problems.

"Wireless" may thus be said to be the Science of Oscillations. The first question is: "How are these oscillations, and especially electric oscillations, produced?" This may be effected in three different ways:—

(A) Assuming that oscillations of a frequency ω have been set up and are therefore available in one circuit, it is possible, by electrically coupling a second circuit to the first, to set up in the second circuit oscillations which, generally speaking, will have the same frequency as the primary oscillations. A wireless receiver will thus oscillate under the influence of the oscillations in the transmitter. Oscillations which are of the same frequency as those by which they are produced are generally called *forced oscillations*. An instance of this is furnished by the well-known resonance phenomenon, where the receiving circuit is tuned to the transmitter oscillations.

(B) It is also feasible to produce oscillations by applying a constant force, or in electric parlance, to generate alternating from direct current. The *arc-transmitter*, *triode-transmitter*, electric bell and organ pipe are instances of this method of producing oscillations. A further example is the reciprocating steam engine, where a rotary motion (*i.e.*, a particular form of oscillation) is imparted by a constant pressure of steam. Further on an electrical analogy of the last example will be given when discussing the *multi-vibrator* and the *oscillating Neon lamp*.

(C) Given that electric oscillations of frequency ω† are available, it is possible, with suitable apparatus, to produce two new oscillations of frequency $\omega+\rho$ and $\omega-\rho$ respectively, wherein ρ often bears a simple ratio to ω.

Two instances of this method of producing oscillations, the correlation of which is not immediately apparent, are the *frequency-doubler* and the *rectifier*. In each case $\rho=\omega$ and the frequencies resulting from ω are:—

$$\omega+\omega=2\omega$$

and

$$\omega-\omega=0$$

i.e., in addition to setting up an oscillation of double frequency 2ω an oscillation of zero frequency is generated, or in other words direct current or direct current magnetisation is produced. In the frequency-doubler the direct current component is ignored and the double frequency alternating current only is used, which is separated out by tuning. In the rectifier the double frequency current is neglected, use being made of the direct current only, which is separated out by means of choke coils and smoothing condensers, *i.e.*, a *circuit tuned to direct current* is used. A further example where $\rho=17/18\omega$ will be discussed in due course.

Section 2.

In order to render the methods of oscillation production more comprehensive, they were classed under three headings (A) (B) and (C); it can be shown however that (A) and (B) are merely variants of (C). For reverting to the general problem of transforming oscillations of frequency $\omega+\rho$ and

* This article was first published in the Dutch language in the *Polytechnisch Weekblad*, 19th November, 1925.

† [Throughout this article "frequency" is used for the angular velocity of the vector, *i.e.*, 2π times the number of cycles per second.—ED.]

Digitized by Google

$\omega-\rho$ from an oscillation of frequency ω, which may be more simply denoted by

$$\omega \begin{cases} \longrightarrow \omega+\rho \\ \longrightarrow \omega-\rho \end{cases} \quad \ldots \quad \ldots \quad (1)$$

the following problems may be more closely investigated :—

I. $\rho=0$ and therefore $\omega \begin{cases} \longrightarrow \omega \\ \longrightarrow \omega \end{cases}$

i.e., we obtain *forced oscillations* of identical frequency.

II. $\omega=0$ hence $0 \begin{cases} \longrightarrow \rho \\ \longrightarrow -\rho \end{cases}$

this denotes (seeing that an oscillation of $-\rho$ frequency simply means an oscillation of $+\rho$ with its phase shifted through 180°)* the *generation of an alternating current of frequency ρ from a direct current.*

III. $\omega=\rho$ hence $\omega \begin{cases} \longrightarrow 2\omega \\ \longrightarrow 0 \end{cases}$

this represents the *frequency-doubler* and *rectifier* mentioned above.

IV. $\rho=\frac{m}{n}\omega$, hence $\omega \begin{cases} \longrightarrow (1+\frac{m}{n})\,\omega \\ \longrightarrow (1-\frac{m}{n})\,\omega \end{cases}$

wherein m/n denotes a fraction reduced to its lowest terms.

Taking the special case where $\rho=\frac{1}{2}\omega$ the following notation is obtained

$$\omega \begin{cases} \longrightarrow 3/2\ \omega \\ \longrightarrow 1/2\ \omega \end{cases}$$

In this case the oscillation of frequency ω gives rise to two oscillations, one of which has a frequency of only half that of the original oscillation, an instance of *frequency division* to which further reference will be made subsequently.

From the examples given it will be seen that the problem of oscillation production is really identical with that of frequency transformation,* it being understood that a direct current can be considered as an alternating current of zero frequency.

Section 3.

We are next faced by the second problem, *i.e.*, that of ascertaining the conditions to which an electric system must comply in order to effect the described frequency transformations. Clearly such a system should conform to different requirements according as it is desired to produce transformation I., II., III. or IV. It is not intended to give a general answer to this question, but rather to investigate the problem of oscillation generation from another point of view, in which particular instances will be cited giving an automatic solution of the problem.

Going back to the now obsolete "spark transmitter" we find that this embodies an oscillating circuit (Fig. 1) consisting of a self-inductance L, a resistance r, and a capacity C, *i.e.*, a circuit complying with the conditions of the differential equation :—

$$L\frac{d^2i}{dt^2}+r\frac{di}{dt}+\frac{i}{C}=0 \quad \ldots \quad (2)$$

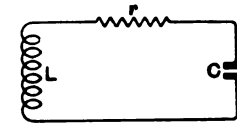

Fig. 1.

When a spark passes the gap a *damped oscillation* is set up. In the following considerations of the problem it is intended to revert to the above simple oscillatory circuit, but to vary the constants in the above equation one by one, and thus follow step by step the inventions and new methods introduced in recent years. In the simple spark transmitting circuits L, r and C are *constants*, *i.e.*, they are independent of the time and independent of the momentary current passing through the circuit.

Section 4.

However, before following up this idea we first consider a circuit consisting of a battery E and a variable resistance r in series with the fixed resistance R (see Fig. 2). If the rheostat (variable resistance) is now moved rapidly to and fro with a slight pause at the end of each move, the resistance of the circuit will vary between the limits $R+r$ and R (Fig. 2). The current in the circuit will consequently vary between

* This is clear from the fact that the vector rotates in the opposite direction.

* The general problem of frequency transforming represented as indicated above, was discussed by the author in a paper read before "Diligentia," and published in *Physical Science Lectures* (*Diligentia*), New Series, No. 2, p. 180, 1924.

Digitized by Google

$E/(R+r)$ and E/R, the P.D. V_r across the rheostat will vary between $rE/R+r$ and zero. Owing to the fact that the resistance of the circuit is varied the source of power E gives rise to a current which may be split up into a direct current i_0 where

$$i_0 = \frac{R+1/2\ r}{R\ (R+r)}\ E$$

and a peaked alternating current of amplitude i_1 in which

$$i_1 = \frac{r/2}{R(R+r)}\ E$$

By referring to Fig. 2 it will be seen that the potential drop over the variable resistance is at a maximum when the current is a minimum and *vice versa*, *i.e.*, as the P.D. rises the current falls off. This property of a conductor is generally called "negative resistance," the conductor in other words has a dropping characteristic, which is one of the conditions necessary to render it suitable for converting direct into alternating current.

Section 5.

We have just seen that when the resistance of a circuit is varied periodically by some external cause, alternating current may be generated. Going one step farther, if we can let the current in the circuit itself cause the resistance to vary, continuous oscillation would be set up in the system. What is meant, however, by letting the current cause the resistance to be varied? The answer to this simply means a divergence from Ohm's Law. The resistance is no longer constant, as is the case in ordinary metal conductors, but now becomes a function of the current passing through it. In order to set up spontaneous undamped oscillations in the circuit shown in Fig. 1 of frequency

$$\omega = \frac{1}{\sqrt{CL}}$$

the resistance r can no longer be considered constant but must now be expressed by

$$r = r(i) \qquad \ldots \qquad \ldots \qquad (3)$$

in which $r(i)$ denotes that r is a function of the current i.

Only by adhering to these conditions is it possible to produce alternating current from a D.C. source. (Case II.)—equation (3)—may be satisfied by the introduction of an *arc-lamp*, a *triode* with reaction, a *dynatron*, etc., but it is not intended to go further into the deduction of the above equation. Put into words, equation (3) simply means that the characteristic curve must be bent.

It has been found that the oscillating circuit as shown in Fig. 1 can only generate

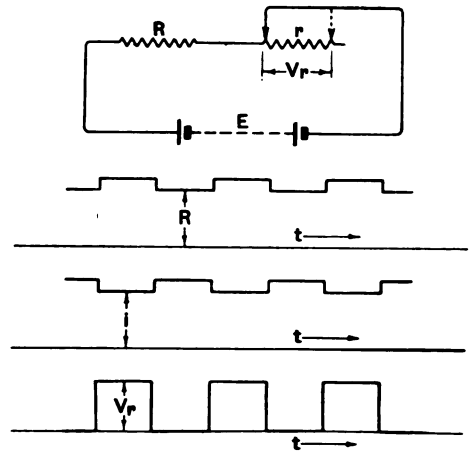

Fig. 2.

damped oscillations when L, r and C are constant as long as

$$r < 2\sqrt{\frac{L}{C}} \qquad \ldots \qquad \ldots \qquad (4)$$

The oscillators just cited fully satisfy the conditions laid down in equation (4) for the range of amplitudes over which it is usual to work (r is obviously dependent on the oscillation amplitude seeing that it depends on the current in the circuit). The frequency of the oscillations generated is expressed by

$$\omega = \frac{1}{\sqrt{CL}}$$

The *Abraham-Bloch multi-vibrator** which consists essentially of a two-stage resistance-coupled retroactive amplifier, forms a triode system capable of generating oscillations rich in harmonics, which are so strongly represented that the 100th can be separated out. This circuit is a further example of that shown in Fig. 1 and, similarly to the normal triode oscillator, the resistance is

* Abraham & Bloch, *Journ. de Phys.*, 1919.

Digitized by Google

again a function of the current, so that the condition of equation (3) is once more satisfied. However, for the multi-vibrator, equation (4) is changed to

$$r > 2\sqrt{\frac{L}{C}} \quad \ldots \quad \ldots \quad (5)$$

It is possible to maintain continuous oscillations conforming with the conditions laid down by (3) and (5) but such oscillations diverge considerably from the sine curve, being more peaked. The frequency is, moreover, no longer determined by the equation

$$\omega = \frac{1}{\sqrt{CL}}$$

but the time period is approximately given by the product of the resistance into the capacity, *i.e.*, a relaxation time. Such oscillations belong to a separate group and can conveniently be called *relaxation-oscillations*. These relaxation-oscillations may be produced in a circuit as shown in Fig. 3 in which a *Neon lamp* may be used at A.*

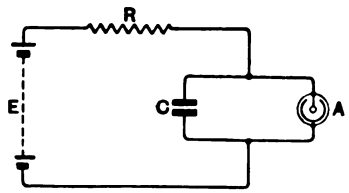

Fig. 3.

Thus, if R is 1 megohm and C a capacity of 1μF, the circuit would oscillate with a time period of the order

$$RC = 10^6 \times 10^{-6} = 1 \text{ second}$$

so that the lamp will light and extinguish once every second.

Mention has already been made of the diode or rectifier as an example of a frequency transformer, in which a direct current is produced from an alternating current of frequency ω (Case III.). In this instance again the operation depends on the bend of the characteristic so that the conditions of equation (3) are satisfied. The bend is therefore essential both for converting from D.C. to A.C. and *vice versa*.

* See Schallreuter, *Ueber Schwingungs Erscheinungen in Entladungsröhren.*

Section 6.

The various properties of the original circuit of Fig. 1, obtained by making r a function of the current, having been fully discussed, it is now proposed to investigate what will happen if the self induction L is made a *function of the current* such that

$$L = L(i) \quad \ldots \quad \ldots \quad (6)$$

An example of this is a coil with an iron core in which the permeability depends on the field strength. In this case the bend of the characteristic is again indicated, only the bends under discussion are now moved one term to the left in the differential equation (2). These bends are largely used in connection with the well-known frequency amplifiers such as are used, *e.g.*, at the Dutch transmitting station of *Kootwijk*. An example of considerable interest in this connection is the development made by Schmidt* who succeeded in bringing out the 47th harmonic in a single step, whilst at the same time maintaining a high efficiency. In passing reference should be made to the interesting investigations carried out by *Zenneck*† and *Heegner*‡ which deal with oscillation circuits in which iron-core self induction coils are inserted.

Heegner's circuit, as shown in Fig. 4, illustrates the principle of *frequency dividers* as opposed to frequency multipliers.

Circuit 1, which includes the alternator E, is tuned to the alternator frequency ω. The circuits 2 and 3, which are coupled to the first circuit as well as to each other by the iron ring transformer, are tuned respectively to frequencies $\omega+\rho$ and $\omega-\rho$. The sole function of the fourth circuit is to provide the D.C. magnetisation of the iron ring. By means of a suitable choice of the controlling factors, alternating currents are set up in circuits 2 and 3, the frequencies of which correspond with the respective tunings of these two circuits, viz., $\omega+\rho$ in circuit 2 and $\omega-\rho$ in circuit 3. *Heegner* was able to obtain $\rho = 17/18\,\omega$, such that an alternating current was produced in circuit 3 the frequency of which was 1/18 of that

* Schmidt, *E.T.Z.*, 40, 910, 1923.

† Zenneck and others in several articles in *Zts. für Hochfrequenztechnik*, 1924.

‡ Heegner, *Zts. für Physik* 29, 91, 1924 and 33, 95, 1925.

Digitized by Google

supplied by the generator E, a remarkably fine instance of frequency reduction.

Section 7.

Returning once again to the well-known circuit, shown in Fig. 1, the resistance r and the self induction L have successively been made a function of the current. The question now arises as to what will take place when the capacity C is made dependent on the current. Although this point could readily be discussed from a mathematical point of view, no practical object would be attained by further investigating this, in view of the fact that so far no material has been discovered, the dielectric constant of which varies with the field strength to any marked extent.

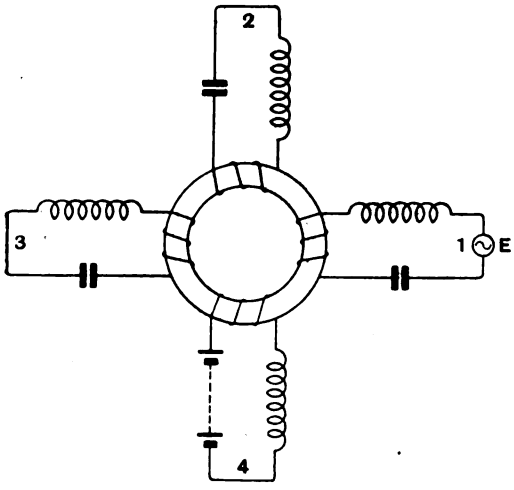

Fig. 4.

Section 8.

In the examples already discussed r and L were made to vary with the current. The momentary value of the latter, determines the momentary respective values of the resistance and inductance; these in their turn react on the value of the current. This complicated interaction is consequently somewhat difficult to grasp in detail and the mathematical solution is rather involved. The problem is considerably simplified by making r, L and C in Fig. 1, *a definite function of the time, i.e.*, rigorously influenced by external means. In such a case the values of r, L and C would be independent of the current. It is of primary interest to investigate the effects obtained when r, L and C vary periodically, viz., when their values themselves oscillate.

Section 9.

Taking first the case in which the *resistance* of the circuit in Fig. 1 *is varied periodically* we have

$$r = r(t) = r_0 + r_1 \sin qt \quad . \; . \; . \qquad (7)$$

in which q denotes the frequency of the oscillation of the resistance.

When q lies within the audible range of oscillations, but the resistance is varying slowly in comparison with the time of oscillation of the high-frequency oscillations, we obtain an example of the *Armstrong super regenerator*,* which is, in fact, an oscillation circuit having a periodically varying resistance. This variation in resistance can be obtained in practice by varying the grid—or anode potential of a retroactive triode system by means of a second triode oscillating circuit of frequency q.

The effective resistance of the former circuit is thereby caused to alternate between positive and negative values, thus rendering the system remarkably sensitive to forced oscillations. It is not intended further to investigate this point at present.

Section 10.

The next step is expressed by the equation

$$C = C(t) = C_0 + C_1 \sin qt \quad . \; . \qquad (8)$$

This time the *capacity* C of the circuit in Fig. 1 becomes *a periodic function of the time*. If q is again an audible frequency we obtain an example of the *condenser microphone*, the theory of which has been investigated by *Carson*.†

The capacity of an oscillating circuit being thus varied at an "audio-frequency," the frequency of the transmitted oscillations also is varied periodically, which may or may not be regarded as a *frequency modulation* as opposed to *amplitude modulation* more commonly met with in wireless telephony.

* Armstrong, *Proc. Inst. of Radio Eng.*, 10, 244, 1922.

† Carson, *Proc. Inst. of Radio Eng.*, 10, 57, 1922.

Digitized by Google

Section 11.

The final case to be investigated is expressed by

$$L = L(t) = L_0 + L_1 \sin qt \quad . \quad . \quad . \qquad (9)$$

In this case the *inductance* L in the circuit shown in Fig. 1 *is varied periodically*. In the main, cases (8) and (9) are analogous; for example, if in case (9) the frequency q lies within the audible range, we obtain an instance of *magnetic telephonic modulation*, in which the iron-core self-inductance of a high-frequency system is altered to the rhythm of speech by means of an alternating current of audio-frequency.

Section 12.

Cases of considerable interest are obtained when the frequency q of the oscillation of L and C attains a value of the order of

$$\omega = \frac{1}{\sqrt{CL}}$$

with which the L, C, r circuit would oscillate freely itself. For example, in Fig. 1, if L and r are kept constant, but the capacity C is varied by a small amount with a rapid periodicity of frequency 2ω, *i.e.*, double the normal frequency of the system, we would have

$$C = C_0 + C_1 \sin 2\omega t$$

in which

$$\omega = \frac{1}{\sqrt{C_0 L}}$$

Without resorting to any external electromotive force, a continuously increasing current* would be generated spontaneously in the circuit. The energy for this current is derived from the work done by the force which draws the automatically charged plates of the condenser repeatedly apart. The condition for the occurrence of this phenomenon is, according to our calculations, expressed by

$$\delta < \frac{\pi}{2} \frac{C_1}{C_0}$$

i.e., the logarithmic decrement δ of the circuit must be less than $\pi/2$ times the maximum variation ratio of the capacity. Experiments to verify these theoretical deductions are at present being made.

Section 13.

The foregoing is intended to be a summary of the modern development of wireless telephony and telegraphy as viewed from one single point of view. It was not possible to make it complete, although it was found feasible to correlate several new inventions which at first sight appeared to stand quite apart. The generation of new oscillations from a given oscillation was principally discussed. The well-known combination tones, on which *heterodyne reception* depends, were not touched upon, though the application of these in *super-heterodyne*† work is daily becoming more prominent. These combination tones are produced from two given oscillations setting up two new oscillations made up of the sum and difference of the former.

* *I.e.*, a continuously increasing alternating current of frequency ω.

† Armstrong, *Proc. Inst. of Radio Eng.*, 12, 539, 1924.

Digitized by Google

Alignment Charts for Selective Amplifiers.

By W. A. Barclay, M.A. **[R082**

IN his article on "Selective Amplifiers" (*E.W. & W.E.*, October, 1925) Mr. P. K. Turner analysed the factors which make for "efficiency" as opposed to "selectivity" in tuned H.F. circuits, and described a practical method of amplifier design to suit given conditions of required signal strength and possible jamming. It will be remembered that he obtained the equation—

$$1/\eta^2=\left(\frac{R_a}{R_e}+1+m\psi\right)^2+m^2\left(\rho-\frac{1}{\rho}\right)^2 \quad .. \quad (1)$$

in which, for the working frequency, ψ represented the phase difference of the coil, *i.e.*, the ratio $R/\omega L$; m the ratio of the anode resistance, R_a, of the valve to the reactance; ωL of the coil; ρ the "tuning ratio" of any different frequency, *i.e.*, the ratio to the resonant frequency; and η the "efficiency," or E_g/E_a,

The equation (1) is of such fundamental importance in the theory of selective amplification that the writer here proposes to describe how, by means of the Alignment Principle, the numerical relations between its several variables may be conveniently and accurately exhibited. In general, the Alignment Principle admits of application to a greater number of variables than can be dealt with graphically. Though it is quite possible to design Alignment Charts which would deal simultaneously with the variations of all the above variables, the diagrams now to be described are, it is thought, sufficiently comprehensive in exhibiting the relations between four only.

The Chart (Fig. 1) is designed to illustrate equation (1), in which, following Mr. Turner, ψ is assumed to have the constant value .01. The ratio R_a/R_e is, however, now treated as variable, thus increasing the generality of the representation. It will be observed that the values of m are represented by a series of short vertical lines, which are intersected by four diagonal lines to which correspond the four values of R_a/R_e which have been selected for illustration, viz., 0, .1, .2, .3. The value $R_a/R_e=0$ corresponds, of course, to the ideal case in which the following grid circuit offers an infinite resistance as compared with the anode impedance of the valve, a condition of affairs which may often be approximately realised on the higher wavelengths. To employ the chart, a straightedge or piece of thread is placed through the point situated at the intersection of the given m and R_a/R_e lines. If now it be rotated about this point until it meets the scale of ρ in its appropriate value, the required value of η can be read off in alignment on the η-scale. It will be seen that if any three of the four variables m, ρ, R_a and η be given, the fourth may thus be found. The convenience of this "inverse" use of the diagram will be appreciated when it is required, say, to find the value of m for which signals of "tuning ratio" ρ will be amplified with efficiency η. Again, the effect of varying R_a/R_e upon the other variables of the formula can be traced with ease; for example, if $\rho=1.2$ and $m=7$, when $R_a/R_e=0$, $\eta=.36$; while if $R_a/R_e=.2$, η decreases to .35.

It will be observed that the "efficiency" here dealt with is defined as the ratio E_gE_a for signals of the detuned frequency. This ratio, it must be emphasised, does not become unity even when the frequency is actually that of the carrier wave to which the amplifier is tuned. That this is so may be seen by putting $\rho=1$ in equation (1), which then becomes—

$$1/\eta=\frac{R_a}{R_e}+1+m\psi \quad ... \quad (2)$$

This equation, of course, gives the relations between m, R_a/R_e, ψ and the efficiency η or E_g/E_a with which the tuned signals are amplified. In this case η does not depend upon the tuning, except in so far as the constants of the equation are themselves modified by changes in frequency.

Chart II. (Fig. 2) has been designed to illustrate equation (2). It will be seen that ψ has been here included as an extra variable. The method of using the chart is similar to that for Chart I. Selecting that point on the network of lines representing R_a/R_e

Digitized by Google

and ψ which corresponds to given values of these variables, we join it to the given value of m, and read the required value of η in alignment upon the η-scale. As before, when any three are given, the fourth may be found. It is of interest to use Chart II. to exhibit the effect of changes in R_a/R_e and ψ upon the "efficiency" of tuned signals. Thus, for example, given $m = 60$ and $\psi = .01$, we find that when $R_a R_e = 0$, $\eta = .625$, while, when $R_a/R = \cdot 1$, $\eta = .588$.

Charts I. and II. (Figs. 1 and 2) provide in compact and readily accessible form the numerical effect on η of changes in m and R_a/R_e, in the first case for signals detuned from the working frequency, and in the second for signals at the working frequency itself. Chart II. is, apart from the inclusion of ψ as variable, a particular case of Chart I., viz., that for which $\rho = 1$, the only value of ρ for which Chart I., being intended for detuned signals,

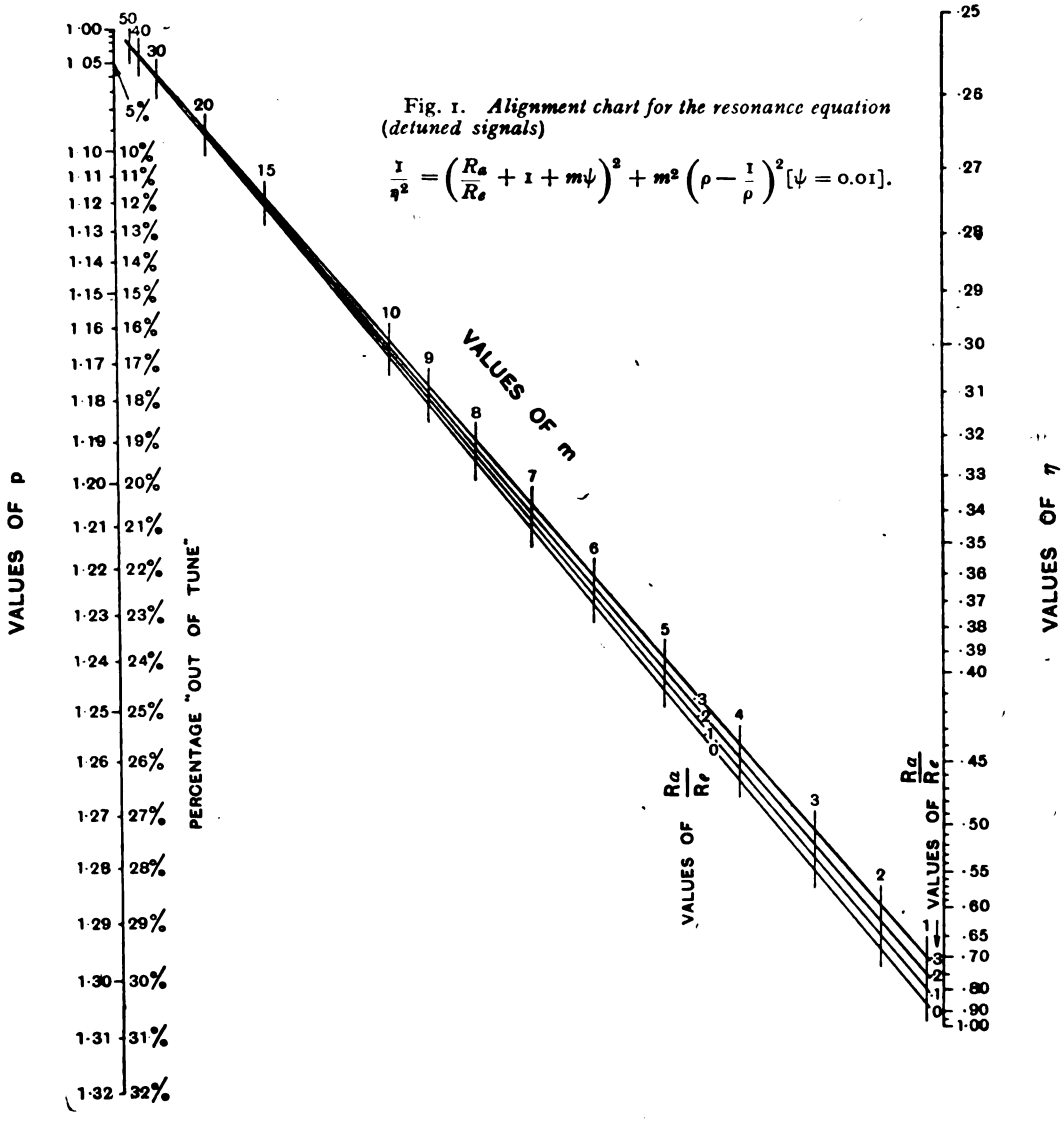

Fig. 1. *Alignment chart for the resonance equation (detuned signals)*

$$\frac{1}{\eta^2} = \left(\frac{R_a}{R_e} + 1 + m\psi\right)^2 + m^2\left(\rho - \frac{1}{\rho}\right)^2 [\psi = 0.01].$$

Digitized by Google

does not cater. It is not necessary to stress the advantages of these diagrams in thus readily showing the effect which changes in the several variables have upon each other. Such features will be obvious to the reader. Mention should, however, be made of the extreme facility and rapidity with which resonance curves of the type given by Mr. Turner may be plotted out by means of these charts, and this, too, for the different values of R_a/R_e which are here included. It may be found interesting to compare the values of η as found from Mr. Turner's graphs (see Fig. 2, p. 802) with the values as obtained from Charts I. and II., taking, of course, $R_a/R_e = .1$.

In order to compare the strength of detuned signals with that of the tuned carrier, Mr. Turner now assumes the latter to be unity, and raises the value of the "efficiency" of the detuned signals in this proportion for all values of m and ρ. Calling now this new estimate of the strength of the detuned signals η', it will be seen that η' may be

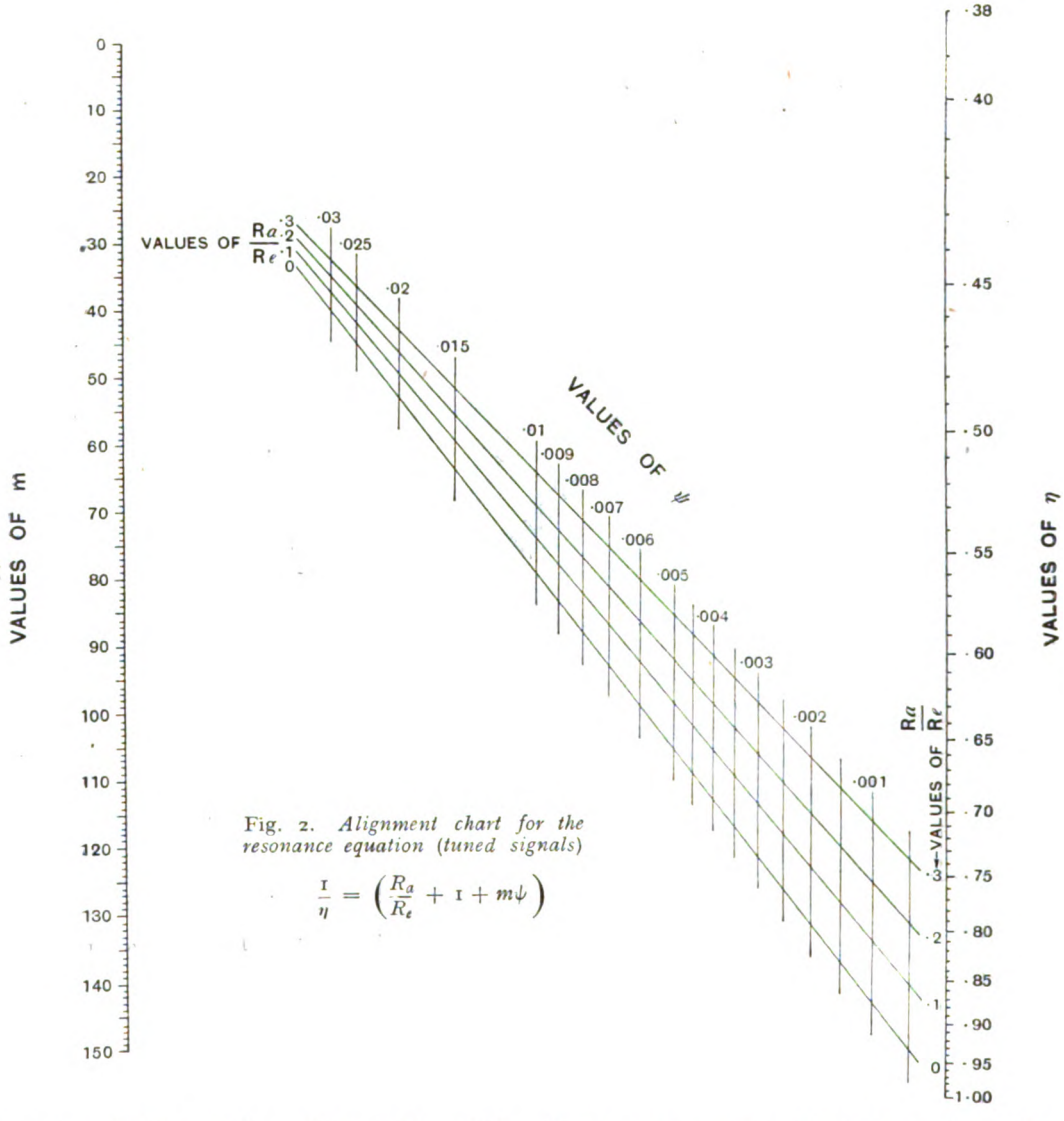

Fig. 2. *Alignment chart for the resonance equation (tuned signals)*

$$\frac{1}{\eta} = \left(\frac{R_a}{R_e} + 1 + m\psi\right)$$

Digitized by Google

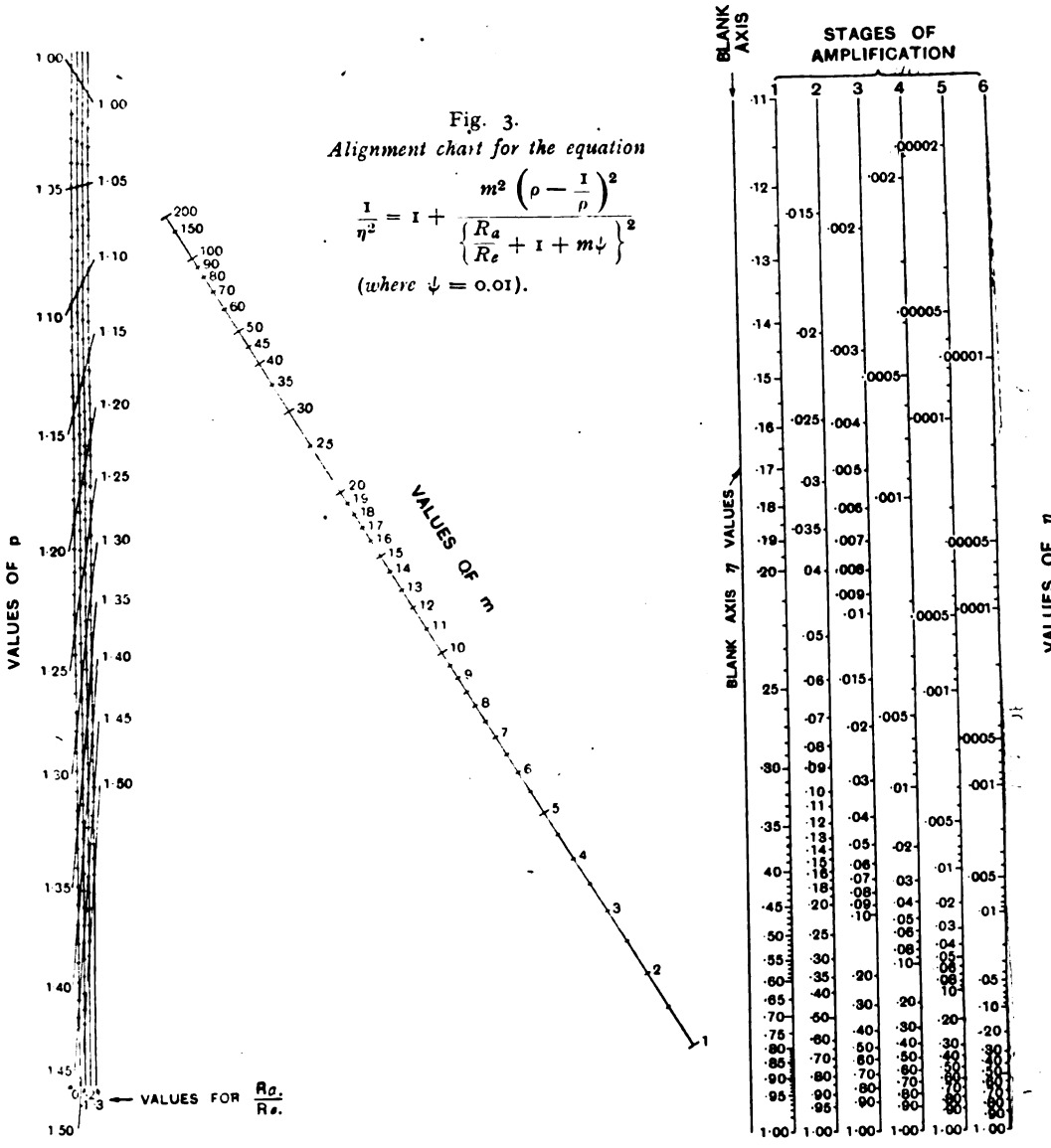

Fig. 3.
Alignment chart for the equation

$$\frac{1}{\eta^2} = 1 + \frac{m^2\left(\rho - \frac{1}{\rho}\right)^2}{\left\{\frac{R_a}{R_e} + 1 + m\psi\right\}^2}$$

(*where* $\psi = 0.01$).

obtained by dividing the efficiency given by equation (1) by that given by equation (2). In symbols,

$$\eta'^2 = \frac{\left(\frac{R_a}{R_e} + 1 + m\psi\right)^2}{\left(\frac{R_a}{R_e} + 1 + m\psi\right)^2 + m^2\left(\rho - \frac{1}{\rho}\right)^2}$$

$$i.e.,\ \frac{1}{\eta'^2} = 1 + \frac{m^2\left(\rho - \frac{1}{\rho}\right)^2}{\left(\frac{R_a}{R_e} + 1 + m\psi\right)^2} \quad .. \quad (3)$$

Equation (3) forms the subject of Chart III. (Fig. 3) in which, as in the case of Chart I., ψ has been taken as having the value ·01. Since the ratio of strength of detuned to that of tuned signals decreases in a geometrical progression with successive stages of amplification, it is possible to include values of η for different stages. Chart III. contains first, on the left, a network of vertical and slanting lines corresponding to values of R_a/R_e and ρ respectively; second, a diagonal line inscribed with values of m; and third,

Digitized by Google

on the right, a blank axis with six other parallel scales, each graduated with values of η for various stages of amplification. The method of use is as follows:—

Seeking upon the left-hand network the point corresponding to the selected values of R_a/R_e and ρ, we find that a line through it and the value of m taken on the diagonal scale will meet the blank axis in a point opposite which the required value of η will be found upon the scale representing the desired stage of amplification. Conversely, knowing the value of η and number of stages, the corresponding point on the blank axis may be joined to that point on the network appropriate to R_a/R_e and ρ, when the value of m is found in alignment. It will be seen that, equally with the other charts, the present diagram affords a means of estimating the value of any one variable in the formula when the others are known. It should be carefully noted that the working alignment point for the values of η is situated upon the blank axis, and that values of η are only to be read off *opposite* to this point. It is therefore important to align with points on this axis, and not directly on to the particular scales of η. To facilitate the reading of the values of η from the blank axis, a number of light horizontal lines have been drawn at intervals throughout its length.

The utility and convenience of Chart III. will readily be appreciated. Given η, the minimum permissible strength of side-bands of "tuning ratio" ρ, we can obtain the corresponding value of m for any desired number of stages of amplification. Thence, using this value of m we can derive corresponding values of η for signals of other detuned frequencies by altering the value of ρ in our alignment. In addition to the above, the effect of varying R_a/R_e can, of course, be taken into account by using the appropriate left-hand vertical scale on which to take the values of ρ.

The Permanency of Calibration of a Variable Condenser.

By E. Simeon.

[R220

FOR many purposes it is obviously useful to have a variable condenser calibrated, so that the actual capacities may be recorded. It is proposed to deal with some defects which may cause undesired variation, thus rendering anything like permanent calibration impossible.

Fig. 1 shows the effect of slight up and down movement of the centre spindle with its vanes. The curve is drawn for a spacing of .04 in. on either side of the moving vanes. The capacity of the condenser as a whole for any given scale reading is, of course, a minimum when the moving vanes are mid-way between the fixed ones. It may appear at first sight that if the moving vanes were shifted up or down, that the loss in capacity on the one side would just negative the gain on the other, the total capacity being unaltered. Suppose, however, the vanes to

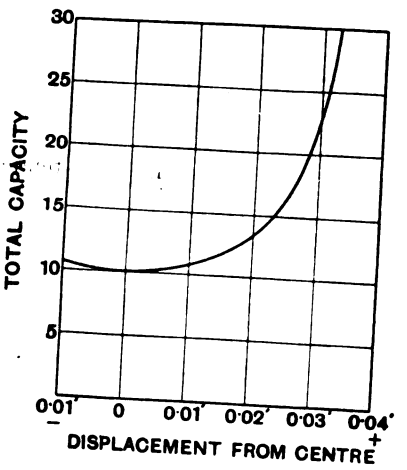

Fig. 1.

Digitized by Google

move axially so that the spacing on one side becomes halved, then the capacity on the other side which is left is clearly the increase in total capacity.

For small movements about the central position the change is seen to be very slight. Thus for the spacing of .04 in., which is quite a usual figure, a shift of .002 in. from the centre position will produce an increase of only 0.25 per cent. The same movement would, however, cause a 3 per cent. increase had the vanes been set in the first place .01 in. from the centre. It is therefore well worth while to set the moving blades carefully to the minimum position before sending the condenser for calibration. This may be done quite easily, the best way being to use the condenser in a heterodyning valve circuit, and adjust the bottom pivot while listening to the note.

To be worth calibration at all, a condenser should surely be reliable to 1 per cent. over at least a year. This means that endways spindle movement must not exceed .004 in. in that time. If the spacing can be doubled or trebled, the accuracy will be increased proportionally, but the bulk of a condenser for a given maximum increases rapidly with increase of spacing, since more pairs of plates are needed, each at an increased spacing.

One or two mechanical details may be useful. The diameter of the vanes should be kept down, even if a longish locking condenser results. A suitable thickness for the vanes is 18 S.W.G., and if of zinc they may readily be flattened with a hot flat iron on a flat surface, a method much less likely to leave strains than hammering. Zinc is, however, rather heavy, and the vanes may in time sag down slightly under their own weight, especially if the condenser is jarred often when being put down. This tendency can be got over by mounting the condenser with its spindle horizontal.

A mild steel shaft is recommended, so that the conical end may be case hardened. The shaft should have a shoulder, on which a spring bears, providing contact and keeping the pivot well home.

The end plate carrying the corresponding conical hole needs to be rigid, and should therefore be of metal, not ebonite. The insulating bush is best made of mica, which is not likely to yield under pressure to any extent. Finally, the condenser is enclosed in a metal case, connected to one set of vanes and earth.

It is possible to design a condenser where any amount of end movement will not produce change in capacity, the principle being shown in Fig. 2. It is not claimed as

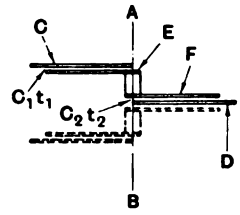

Fig. 2.

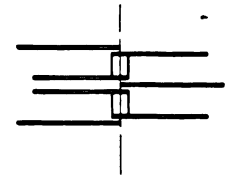

Fig. 3.

a complete solution to the problem, because it has the disadvantages of large bulk for capacity, and rather high minimum value. It is at any rate believed to be original. AB is the axis of the condenser, C and D being two fixed semi-circular electrodes, the terminals of the condenser being soldered to them. On the spindle is mounted an insulated pair of semi-circular vanes, E and F, connected by a distance piece. Other plates may, of course, be added below, all fixed plates under C being joined together, and similarly with those under D.

The areas of E and F are made equal, and the same dielectric exists between C and E, and between F and D. Hence any difference in capacity between C_1 and C_2 will be due to the spacing t_1 or t_2, *i.e.*,

$$C_1 = \frac{K}{t_1},$$

$$C_2 = \frac{K}{t_2}$$

C_0, the capacity between the plates C and D, will be equal to the product of these two divided by their sum, the two condensers being in series.

$$C_0 = \frac{\frac{K^2}{t_1 t_2}}{K\left(\frac{1}{t_1} + \frac{1}{t_2}\right)} = \frac{\frac{K}{t_1 t_2}}{\frac{t_2 + t_1}{t_1 t_2}} = \frac{K}{t_2 + t_1}$$

i.e., the capacity between C and D depends only on the sum of t_1 and t_2, which is not changed if the plates E and F move up or down.

In the minimum position, the plates are as in Fig. 3.

Digitized by Google

Some Notes on Intervalve Couplings.

A Lecture delivered by Mr. H. L. KIRKE, of the British Broadcasting Company, before the Radio Society of Great Britain, on 28th April, 1926.

[R132

WHEN I was asked by one of your members a little while ago to give a lecture here, at rather short notice, I had the same difficulty that I always have when I am asked to lecture, in deciding what to talk about. I always feel that other people have talked so much about the various subjects that it is very difficult to find something that is really interesting and useful and new to talk about. Therefore I thought that possibly the best thing to do would be to choose rather a wide subject and run through a number of notes of results and experiments that I have carried out rather than to give a definite lecture on one small subject. The subject I have chosen is intervalve coupling and I propose to run through the general principles of magnification and to discuss the odd things that occur in amplification rather than to deal with the things that everybody knows all about.

Magnification is generally accomplished by a valve having in its anode circuit some form of impedance, sometimes in the form

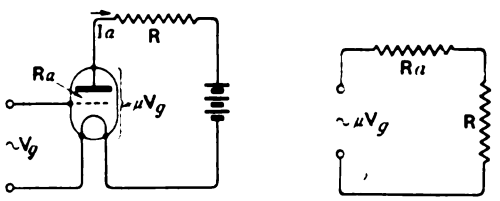

Figs. 1 and 1*a*. *The relation between the various quantities is* $I_a = \mu V_g / R + R_a$, *and the magnification is*

$$R I_a / V_g = \mu / 1 + \frac{R_a}{R}.$$

of a plain resistance which acts as an ordinary resistance amplifier, and sometimes it is a choke with inductive impedance, and sometimes it is a resistance shunted by a capacity. Sometimes chokes are shunted by a capacity and in many cases the circuit is tuned to a frequency so that it amplifies at that frequency. In general, the magnification of a valve can be considered as the ratio of the amount of voltage developed across the impedance in the anode of the valve to the voltage which is put into the valve. From that point of view it follows that you can consider a valve as a generator having a

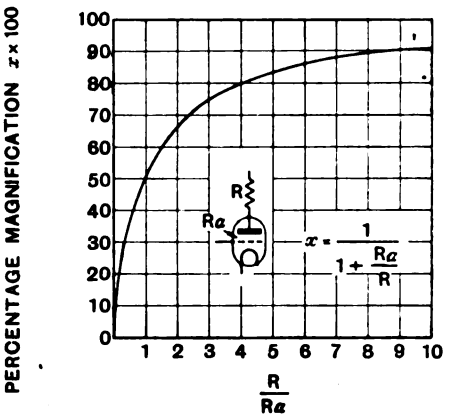

Fig. 2. *Curve showing per cent. magnification of a valve with a pure resistance load in the anode circuit.*

certain E.M.F. at its terminals and having a certain internal resistance, *i.e.*, when the grid is made alternately positive and negative, the anode current alternately increases and decreases, causing differences of potential across the output circuit. These differences of potential tend to reduce the rise and fall of the current and so to reduce magnification, which is exactly what happens in an A.C. generator, and if you put a high resistance in series with an A.C. supply it is obvious that you will not get very much current if you want to take a large load out of it, and you will not get very much potential difference.

At the top of Figs. 1 and 1*a* an ordinary plain resistance amplifier is shown in which the magnification is the ratio of the voltage developed across the resistance—which can be applied to any other stages which come after it—to the input voltage. I neglect all questions of plate, grid, etc. That ratio is represented by the formula given.

Digitized by Google

Fig. 2 is a curve showing the ratio of the maximum possible magnification which you get, for various ratios of the external impedance to the internal impedance of the valve, and for a ratio of 8½ to 1, the magnification is 90 per cent. of the maximum, and it falls off in a fairly even curve.

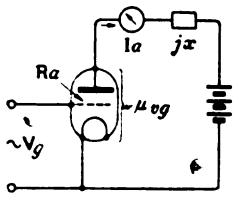

Fig. 3.

Here $I_a = \mu V_g / R_a + jx$ *and the magnification* $= \mu / I + \frac{R}{jx} = \mu jx / R_a + jx$.

By jx in Fig. 3 I mean a pure negative or positive reactance in the plate circuit. This is a somewhat different case because you have the E.M.F. across jx 90° out of phase with the current flowing through it and consequently the magnification ratio will be reduced in a different way. The various formulæ which you will all recognise, are shown under the figure.

Fig. 4 shows a curve of relative magnification in percentage against the ratio of internal and external impedance, and you see that for 9 to 1, we get nearly 100 per cent. That is due to the fact that the back E.M.F. is 90° out of phase and does not reduce the current in the same way as an ordinary resistance does. For 90 per cent.

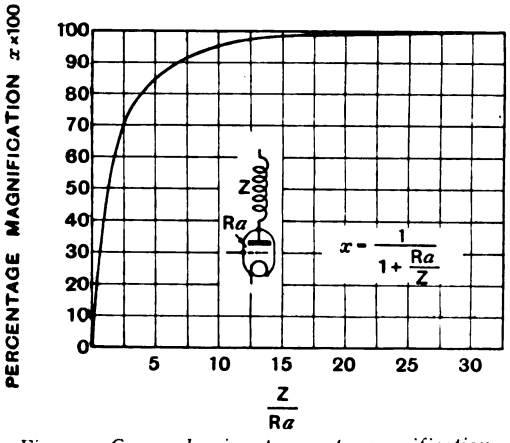

Fig. 4. *Curve showing per cent. magnification of a valve with pure inductance in the anode circuit.*

here, we only need a 3 to 1 ratio to get the same ratio of magnification to the maximum as we did with the resistance amplifier. This other scale is the inductance in henries required per thousand ohms of anode impedance at 50 cycles to give the various percentage magnification, as shown in the scale, so that if you have a 1,000-ohm valve and 20 henries you will get 98.7 per cent. magnification out of the valve, at 50 cycles, which is fairly good.

At relatively low frequencies, *i.e.*, audible frequency, there are various peculiar things which can happen to a valve.

The ordinary valve has an inter-electrode capacity which many people who have done short wave work hate like poison. Unfortunately, that capacity can come in at relatively low frequencies. If you have a circuit such as Fig. 5, and you apply an E.M.F. to the grid, it will cause a certain magnification and you will get a certain difference of potential across the anode. That will cause a current to flow back to the condenser through the resistance R_g, causing a potential difference the phase and magnitude of which will depend on the value of the condenser. If the condenser is infinitely large you will get the same potential across R_g that you do at the anode.

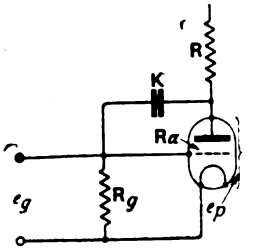

Fig. 5.

Circuit representing conditions in an amplifier.

When the grid is negative due to the incoming impulse, the anode will be positive and you will get back an amount of E.M.F. on the grid which is exactly 180° out of phase with the incoming E.M.F. That reduces the magnification to less than 1, the phase angle will change round to nearly 90° when the condenser impedance becomes very high in relation to R_g. R_g means the grid-leak of the valve, in parallel with the impedance of the valve before it, because if you have another valve you have *via* an intervalve condenser the impedance of the other valve to earth, so that the anode impedance of the valve before is really in shunt with R_g. We call X the ratio of the magnification, which you get when feed back is present, to the magnification which you would get if there were no feed back. We came across this anode reaction about 18 months ago in some work on power modulation systems in use at the time.

Digitized by Google

We had certain apparatus and were taking curves of the magnification right through the system and we found that the magnification at about 5,000 cycles was about one-tenth of what it ought to be and various experiments showed that it was due to this capacity feed back. Actually we had seven valves, which were fairly big, in parallel and we were working with about 10,000 volts on the anode, and that was the result we got. We could not reduce the capacity K because it was the capacity of the valve and we could not use a different type. We actually did reduce the M value of the valve a little bit by opening the grid, which reduced the effect slightly but the best effect was obtained by reducing R_g. We did not actually reduce the grid-leak resistance but we reduced the impedance of the valve before it. The reason we did not reduce the grid-leak resistance was because we had an intervalve condenser which we could not increase in capacity, so we actually changed the impedance of the valve, from one of 50,000 ohms to two in parallel of 5,000 ohms each, which reduced this value of R_g, which meant that the frequency at which we could get a definite cut-off, X, was very much higher. Thus we reduced R_g from 50,000 to 2,500, a matter of 20 to 1, so that the frequency at which we got a definite cut-off in magnification was increased by 20 times, and that was our saving grace on that particular job.

In H.F. amplification, it is generally assumed that it is not possible to amplify with resistance capacity at wavelengths below 1,000 metres, but actually I have used H.F. magnification, or I have seen it done, at 250 or 300 metres, fairly successfully. I do not say the magnification is efficient, but it is a definite magnification which is useful and that magnification was not obtained in the ordinary way. The reason I am talking about that, is this: most people consider that the loss in magnification is due to the valve capacity shunting the anode resistance. That is so to a certain extent, but intervalve feed back comes in considerably and in all cases we may have pure resistance in the grid and in the anode. The feed back due to this, results in a definite reduction because the E.M.F. across the grid due to feed back has got to be made up by the incoming signal which actually reduces the magnification, and I firmly believe that quite a lot of the loss of magnification in high frequency is due to that feed back and not purely to the fact that there is a shunt capacity across the resistance.

I show in Fig. 8 a circuit which I have tried. I have used it in other connections and find it useful and I think it may possibly neutralise the feed back effect and enable one to get a fairly good magnification. Part of the circuit is a pure capacity Wheatstone bridge and the two valve capacities are balanced so that any E.M.F. across one diagonal will not produce an E.M.F. across the other. I have not tried that circuit for the particular purpose of neutralising the

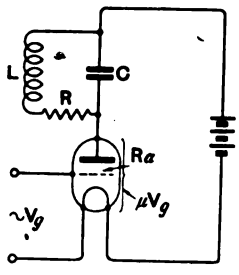

Fig. 6.

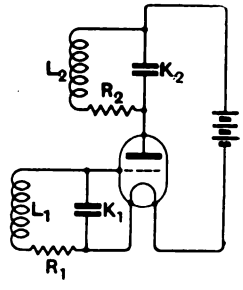

Fig. 7.

Fig. 6. *Tuned anode circuit. When there is no reaction and the circuit* LRC *is in resonance, the phase angle of this anode circuit load is zero and* LCR *acts as a pure resistance. The magnification is* $\mu/1 + R_a RC/L$.

Fig. 7. *Tuned anode circuit with tuned input to valve.*

feed back in resistance amplifiers, but only in transmitting sets, but I think it is worth considering.

Fig. 6 shows an ordinary tuned anode circuit, neglecting what is put on to the grid in an ordinary circuit of this kind and it is generally assumed that the circuit CLR has tuned resonance. When the circuit has zero phase angle, it acts as a resistance and therefore that circuit can be assumed to have the same effect as a resistance amplifier. The capacity across the electrodes is neglected and therefore we should be able to consider an ordinary tuned anode circuit as a pure resistance amplifier having a magnification given by

$$M = \mu/1 + \frac{R_a R}{L}.$$

Digitized by Google

If that is the case, *i.e.*, if it is pure resistance, then everything that happens in your resistance amplifier must happen in the tuned anode. Therefore, with a circuit like this, we shall have a feed back effect which will give anti-reaction—not ordinary reaction—due to the phenomena shown in Fig. 5. From that it would appear that with an ordinary tuned anode you will get anti-reaction so that it will not oscillate. The average tuned anode, if you adjust it by twiddling the knobs, oscillates—much to the annoyance of your neighbours—and the reason is this: If you mistune the anode circuit very slightly one way you will alter the phase angle in one direction; if you mistune the grid circuit slightly in the opposite direction you alter the phase angle in the opposite direction and the result is that you so juggle the phases of the two sets that the conditions of anti-reaction,

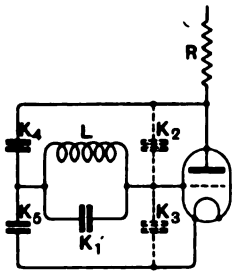

Fig. 8. *For balance* $K_4/K_5 = K_2/K_3$.

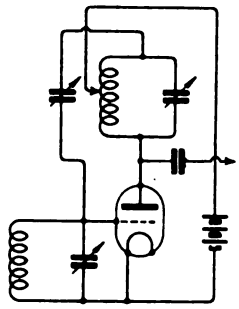

Fig. 9*a*. *The ordinary neutrodyne circuit.*

shown in Fig. 5, change and you turn what was an anti-reaction into a reaction by mistuning the circuits; therefore you will not be getting maximum efficiency. Actually, you always tune in to the maximum signal and therefore it can be assumed that you tune in to the point where you have maximum reaction, because the magnification of an ordinary valve is no more than about 6, where as the magnification or increase of signal due to reaction is of the order of 20 to 40 times, according to the stability of the circuit and the resistance of the various coils.

There are one or two possible methods of overcoming this anti-reaction and so enabling you to tune dead on to the radio frequency and get the advantage of the full magnification of the valve and the full effects of resonant circuits as well as reaction (Figs. 9*a*, 9*b*, 9*c*). Circuit Fig. 9*a* is the ordinary well-known neutrodyne circuit, but the balancing condenser is increased beyond

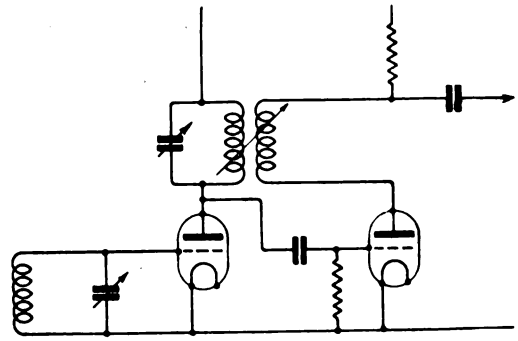

Fig. 9*b*. *Tuned anode circuit with reaction.*

the neutrodyne point, *i.e.*, the point where its capacity is equal to the intervalve capacity, to bring up the reaction and I have found that such a circuit does give better results than the ordinary tuned anode circuit which is left to oscillate and is damped in some way.

Fig. 9*b* is an ordinary tuned anode with reaction from the detector valve on to the anode circuit, and that is considerably better than an ordinary circuit for reacting.

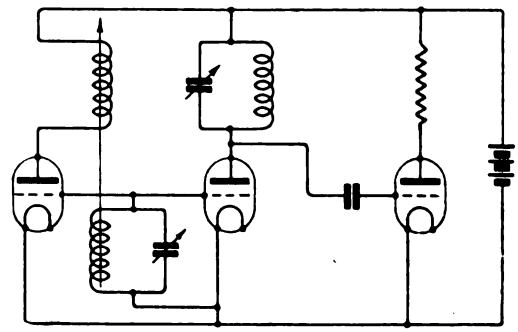

Fig. 9*c*. *Circuit using an extra valve to give stable reaction control.*

Fig. 9*c* is a commercial circuit which a friend of mine got out some years ago and it is used considerably. The left-hand tuned circuit is the aerial coil or closed circuit coil and the circuit generally is fairly simple for

Digitized by Google

reacting. You get pure reaction without mistuning the circuit and that is a very good thing to use, particularly in resistance amplifiers where you have no other means of getting reaction. Reaction from the ordinary resistance amplifier is, to put it mildly, rotten, because you get all sorts of phase changes, whereas in this it knows what it is doing. It may be argued that it is not worth having the extra valve because you do not get the extra gain, but it is much better than using the valve as another tuned anode, because if you put in another tuned anode you have more instability and three handles to tune plus the reaction controls, whereas in this case you have only two handles and one reaction which is very, very stable.

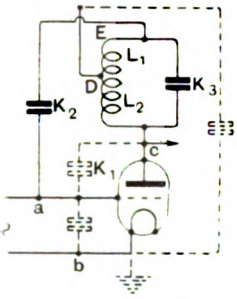

Fig. 10a. *Showing where the stray capacities occur in a tuned anode circuit.*

The next point in connection with high frequency is the balancing of the neutrodyne circuits. Everybody has more or less gone in for neutrodyning at the present moment,

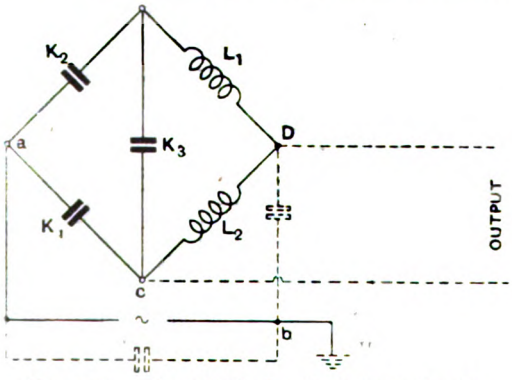

Fig. 10b. *Theoretical circuit of neutrodyned tuned anode.*

except those with the supersonic tendencies, and I thought a few comments on neutrodyne balancing, particularly where a large number of stages have to be used, would be useful. An ordinary simple neutrodyne circuit with a split anode coil (Fig. 10*a*) is one of the simplest things possible to rig up. What happens is that when you get a signal in the anode circuit you get a circulating current in the anode coil, and when the anode end is positive, the opposite end will be negative and *vice versa*, and you put back on to the grid the same amount of E.M.F. but in the opposite phase from the E.M.F. put back through the intervalve capacity. If we draw that in another way (Fig. 10*b*) it looks like a Wheatstone bridge, the lettering give the clues for tracing the set, but the only snag is this, in a Wheatstone bridge you put in E.M.F. across *A* to *D* and take it out from *C* to *E*. In a tuned anode such as this, you take it out across the anode and the filament, because the H.T. usually goes through the condenser to earth, so that you take the output only across half the coil. In the

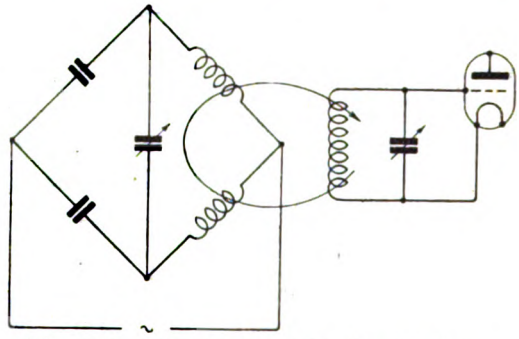

Fig. 10c. *Theoretical circuit of neutrodyne transformer.*

average neutrodyne receiver there are four valves and you balance by turning out the filament and adjusting the neutrodyne condenser until you get silence, and when you have done that you light all your filaments again and the thing begins to oscillate (laughter). The reason is, I believe, that you do not get a true balance.

Fig. 10*c* shows a form of neutrodyne circuit in which you can definitely get a balance.

Figs. 11*a*, 11*b* and 11*c* show circuits in which the anode tuning condenser or a part is split.

Figs. 12 and 12*b* give another circuit in which the grid coil is neutrodyned instead of the anode coil. In the ordinary course of events the anode coil or condenser is split, but in this case a pure Wheatstone bridge is constructed. There is capacity between the grid and plate, balanced

Digitized by Google

by a condenser, and another capacity between grid and filament which is balanced by a condenser. Therefore a coil is connected across *C D* (Fig. 12*b*) which is not affected by potential across the anode coil. A grid-leak is used in order to allow the grid current to get to earth somewhere and another gridleak should be connected across the opposite arm (*a d*) to balance properly. It may be necessary, if ever you use such a circuit as that, to put a small resistance in series with the condensers in order to get a perfect balance. The great advantage of this circuit is that you do not lose half the impedance of the anode circuit as in a split coil, as it is sometimes an advantage to have a high impedance in the anode circuit.

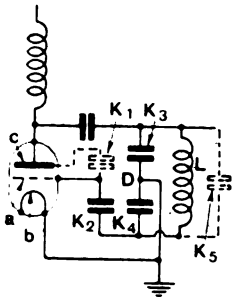

Fig. 11*a*. *Neutrodyning with a split tuning condenser.*

Fig. 13*a* is another type of circuit which has been used. Essentially it is a tightly coupled transformer with tuned secondary.

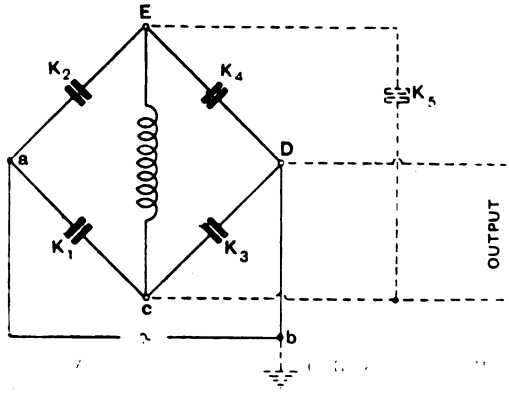

Fig. 11*b*. *Theoretical circuit of Fig. 11a.*

The primary has a centre tap. The end remote from the anode has an equal and opposite potential induced which is used to balance.

Fig. 13*b* is a system of neutrodyning used in America and consists of a reversed winding transformer tightly coupled, a portion of the secondary being connected through a condenser to the grid. I have used that circuit lately with four and five stage magnification and it has the disadvantage that it tends to get out of balance for different frequencies rather quicker than most circuits, because the coupling is not 100 per cent. and also because there is a considerable amount of electrostatic capacity between the two coils which puts the circuit out of balance. That could be got over by copper

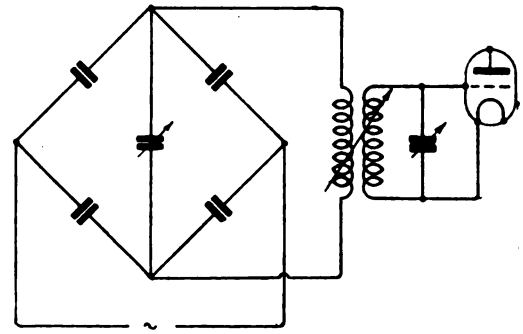

Fig. 11*c*. *Theoretical circuit of neutrodyned transformer using a split tuning condenser.*

screening between the coils, but that would at the same time probably decrease the efficiency somewhere else, and I do not think it would be worth it, unless very carefully designed.

In Fig. 14 we have an ordinary low frequency choke-coupled amplifier, of which you have seen the curves before. Various people have asked me what sort of choke to use and I have shown in Fig. 4 a simple formula for estimating the choke value.

There is just one point in connection with the choke-coupled amplifier which is worth while bringing out. If you use this circuit and your loud-speaker does not bring out anything below 300 cycles, it is no use giving magnification below that, and you probably put in a smaller choke. If you happen to be using a valve with large inputs, you will get distortion because the choke does not act in the same way to the

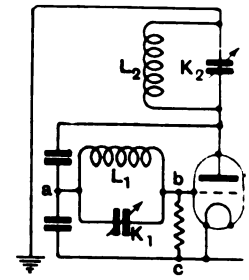

Fig. 12*a*. *Showing how the grid coil may be neutrodyned.*

Digitized by Google

frequency for which it is designed as for the low frequency. It takes more current at low frequency and it alters the dynamic characteristic of the valve and you get base blasting, since all forms of blasting

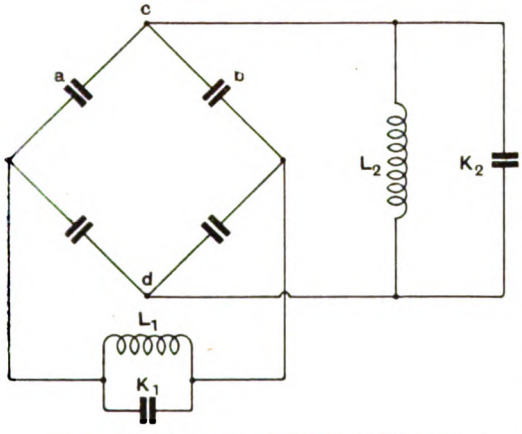

Fig. 12*b*. *Theoretical circuit of Fig. 12a.*

produce harmonics and all harmonics will be heard in the loud-speaker although the fundamental is audible.

I do not think there is any necessity to say anything more about ordinary resistance low frequency amplifiers and the curve I showed at first is quite obvious. The minimum value for an intervalve condenser in any low frequency amplifier must be borne in mind. Incidentally, it is considered in best circles that it is necessary to get reproduction down as far as 50 cycles

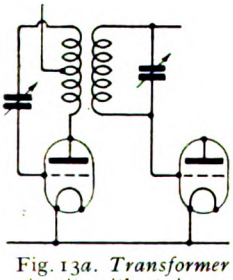

Fig. 13*a*. *Transformer circuit with primary neutrodyned.*

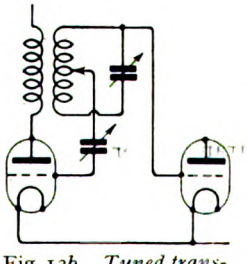

Fig. 13*b*. *Tuned transformer circuit with secondary neutrodyned.*

for the reproduction of music and that you must have fairly big condensers. The value of an intervalve condenser depends solely on the lowest frequency you want to transmit, and on the value of the grid-leak, because all the grid condenser has to do is to pass current through it to the grid-leak. If you increase the value of the grid-leak you can decrease the value of the condenser and *vice versa*.

The next thing we come to is low frequency transformer amplification, which is a subject in which I dare say everybody is interested. A transformer which has no shunt across the secondary can be regarded at low frequencies as a pure choke-coupled amplifier, and the total magnification of such a transformer is the magnification of the primary considered as a choke-coupled amplifier, multiplied by the step-up ratio. The trouble is how to design the secondary, because it has self-capacity and magnetic leakage.

A representative diagram of any transformer is shown in Fig. 15. We are considering here (R_a) the internal resistance, which may be a valve or anything else; the same law holds. R_2 is the primary resistance; R_3 is the secondary resistance; L_3 and L_4 are the choke inductances of the two windings; K_1 is the capacity of the secondary. L_1 and L_2 represent the magnetic leakage of the transformer; it has been found that in most cases the magnetic leakage of a transformer can be represented by series inductances in the primary. And for the secondary, R_1 represents the hysteresis and eddy current loss. In the diagram we have the primary consisting of inductance and resistance and the secondary is, in effect, a resonant circuit. If we had no any leakage, and had just a resistance across this circuit between *PY* and *SY*, looking at it from the primary—I do not know whether you can follow the method—but I mean what would you feel like if you had a transformer like that stuck on to you. What current would you produce and what would its phase angle be? If we had a resistance shunted across the secondary what would it look like viewed

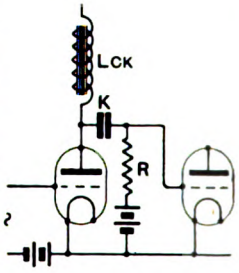

Fig. 14. *A low frequency choke coupled amplifier, which gives a magnification curve similar to Fig. 4.*

Digitized by Google

from the primary? Normally, if we had no losses in the transformer and an infinitely large inductance, we have a resistance across the secondary which takes current and allows the primary to take current in order that the lines of force in the core shall cancel out, but if you have a 2 to 1 step up transformer the secondary volts are double the primary volts, the secondary current half the primary current. The impedance of any circuit is the voltage divided by the

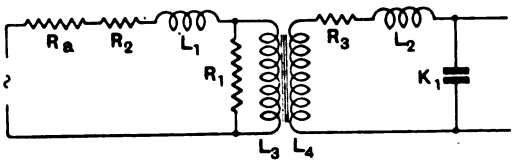

Fig. 15. *Equivalent intervalve transformer circuit.*

Here R_a *Anode impedance.*
R_1 *Eddy current and hysteresis loss.*
L_1, L_2 } *Leakage inductances.*
L_3, L_4 } *Primary and secondary inductances.*
R_2, R_3 } *Primary and secondary resistances.*
K_1 *Secondary self capacity.*

current; therefore, the impedance of the secondary circuit can be said to be four times the impedance of the primary circuit. In other words, the impedance of a transformer, as shown on the primary or the secondary, varies as the square of the transformer ratio—that is absolutely fundamental, and it must be remembered that it is so. Therefore, we can ascertain the primary impedance by taking all the impedances in the secondary and dividing them by the square of the transformer ratio. If we have a resistance of 100,000 ohms and a 2 to 1 transformer, there would be 25,000 ohms as the effective primary impedance and if we have half a henry as L_2 it would be one-eighth henry as L_1 on the primary. If we have 1μF as K_1 it would be equal to 4μF across the primary.

Fig. 16 shows a transformer laid out as looked at from the primary. R_1 is a fairly high resistance; L_3 is a very high choke value; L_1 is a small inductance; R_2 is a small resistance and R_a represents the impedance of the valve. Therefore we see that at high frequencies L_3 will pass but little current and the resistance R_1 is high, so the thing approximates to an ordinary series resonating circuit. With such a circuit we are tending to get more and more voltage developed across K_2 as the frequency goes up. Then, at a certain point, magnification will drop off again, the amount of increase at the resonant frequency (R_a) will depend on the resistance. The lower we make R_a, the more will be the resonance, and the higher the resistance the less will be the resonance.

Now we come to an interesting point. As we increase L_2 to bring up our low frequencies (the inductance of the primary is the thing that matters), we have to increase the primary turns and increase the inductance. As we increase the turns we decrease the ratio and, at the same time, decrease the ratio of L_5 to K_2 because L_5 is inversely proportional to the square of the ratio and K_2 is proportional to the square of the ratio. By altering the number of turns we increase the magnitude of the resonance peak, due to resonance circuit, L_1 L_5 K_2 R_a considerably, and that is a point which must be taken great care of. The only way of getting over that is either by decreasing the leakage, by increasing the capacity, or by putting a shunt across the secondary.

Three transformer curves are shown in Fig. 17: (A) is a typical good commercial

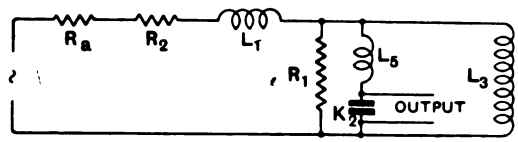

Fig. 16. *Equivalent intervalve transformer circuit as regarded from the primary side.*
Here X = *Transformer ratio.*
$L_5 = L_2/X^2$ ($L_2 \times K$ *as in* Fig. 15.)
$K_2 = KX^2$.

transformer which starts cut-off up at about 650 or 700 cycles and is down to about .7 at 500 cycles and it goes up to a slight peak at 5,000 cycles, dropping off again. That peak is what is left of the resonance peak after the losses in the transformer. If we try more turns on the primary of the transformer to get up to low frequencies, we get the curve (B), and that actually happens in practice. We had enormous difficulty to get over that but we did so by damping the secondary with resistance and the

Digitized by Google

resultant curve is shown in (c). It is interesting in this connection to note that for an ordinary valve, like the LS5, PM6 or DE5, if you want to get an intervalve transformer which drops not more than 10 per cent. at 50 cycles and not more than 10 per cent. at 10,000 cycles—which is the ideal transformer, although I do not know of one being in existence (commercially) at present—you will not get a step up of more than 2.25 to 1. For a 10 per cent. drop at 300 and 5,000 cycles, you may have a 6 to 1 ratio transformer and that explains when you see on the market 8 to 1, 6 to 1, 4 to 1 transformers, etc. You are always told there is no distortion, in fact, none of the transformers ever distort officially, but what actually happens is that they have got different ratios and different turns and they have got different characteristics. The ones which have a high step up ratio have not got enough turns on the primary.

With regard to the use of stalloy iron, which is used so largely on transformers, there is the question of the flux density at very low intensities and I think it would be interesting to endeavour to plot a curve showing the value of inductance for various magnetising forces expressed in ampere turns.

Fig. 18 represents *log* ampere turns against inductance. I think this figure rather destroys the idea that iron does not do anything at low intensities; that idea

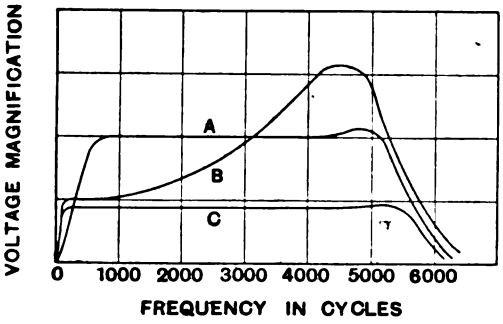

Fig. 17. *Amplification/Frequency curves for various transformers.*

has been put forward and has misled people considerably.

The curve was taken by an inductance bridge and amplifier, the current in the coil being measured at one value and adjusted by the insertion of resistance networks between the supply and the input terminals of the bridge, great care being taken to avoid any cross talk or induction troubles.

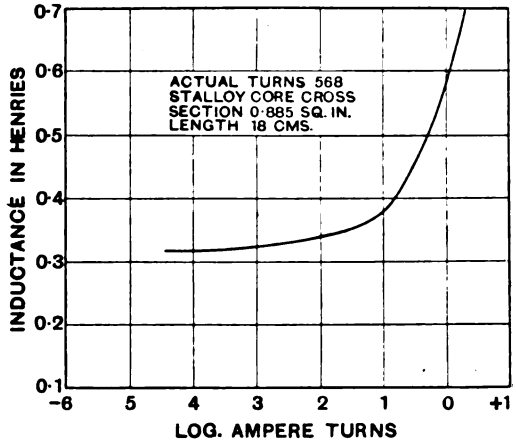

Fig. 18.

DISCUSSION.

Mr. R. E. H. Carpenter: I should like to thank Mr. Kirke for one of the most interesting lectures to which I have listened for a long time. Mr. Kirke has shown himself a master of his subject, and there are one or two points on which I should like his views. The first is this. Van der Bijl was, I think, the first to point out that if you have a reactance in the anode circuit of a triode, the characteristic—which before you put the reactance in might have been a straight line—opens out into an ellipse. If that is the fact, it would seem that it would be impossible to avoid a certain amount of rectification in a triode which has reactance in its anode circuit.

I am very glad that the lecturer has nailed down once for all the extraordinary story that was started a little while ago that iron does not respond to very small magneto motive forces. I think his results are in substantial agreement as to shape—I do not know how they agree quantitatively—with the generally accepted statement that stalloy has an initial permeability of about 300, and I should be interested to know how Mr. Kirke's results compare quantitatively with that figure.

With regard to one of the earlier slides showing a retroaction circuit in which you used potential from the remote end of the anode coil in order to get the retroaction effects—I think it was slide No. 9—one is, of course, familiar with the fact that over-neutrodyning will bring you into the oscillating condition again, and I have tried to make a rough comparison between the signal obtained when getting critical retroaction by under-neutrodyning and over-neutrodyning. I do not think it makes much difference whether you approach your critical retroaction by under or over-compensation. I should like to finish by again

Digitized by Google

thanking Mr. Kirke very much indeed for his lecture. I am looking forward with great pleasure to seeing the thing in print when I can perhaps digest some points I have not been able to to-night.

Lieut. H. S. Walker: I hardly know what to say about this lecture by Mr. Kirke. Mr. Carpenter has covered several points which I wanted to bring out, and he has left me very little to say beyond the fact that this lecture obviously wants a lot of consideration and digesting. One cannot grasp it all at once because it covers such a wide field. I think, however, it may be interesting to ask Mr. Kirke, if he has a few moments left at the end of this discussion, to say a little more on the subject of the general design of neutrodynes, particularly with regard to getting perfect balance. I feel that with most neutrodynes—or, rather, the neutrodyne circuits one meets with—one cannot get perfect balance no matter how one may screen the coils, for the reason which he mentioned—namely, that the perfect Wheatstone bridge effect is not usually obtainable. I think it could be obtained, and, if it could, I think one might use a much larger number of stages in cascade. The other point I want to ask the author for further explanation about is the use of resistance capacity for high frequency work. Obviously it always possesses the disadvantage that there will be a drop of potential on to the anode so that extra high tension voltage must be used, but probably in these days that is not so serious as it might have been 12 months ago, and therefore it has occurred to me that a field is opened for perhaps more use to be made of resistance capacity for high frequency work, because, after all, it does away with the necessity for an extra control, such as a tuning condenser, which one has to use for a tuned anode or tuned grid, and, for that matter, also transformer coupling. Mr. Kirke did not deal with a subject which interests me very much, and that is the question of the intervalve coupling for the intermediate frequency stages in the superheterodyne receiver. I think most of the points which he talked about covered that field, but it does possess one or two special points, particularly, I think, the question of whether it is worth while to neutrodyne intermediate frequencies or to use some apparatus other than a transformer for the coupling. I know transformers are chiefly used for the intermediate frequency coupling, but I am not at all sure in my own mind whether they are the best method of coupling. If Mr. Kirke has a few moments to spare I should be very grateful if some remarks could be made, especially on the latter point.

Mr. Ashbridge: I also should like to express my appreciation of Mr. Kirke's most excellent lecture. He has dealt with the thing in a highly scientific way, and after listening to his lecture there is very little more to say on the subject, although it is such a large one. There are, however, two points I wish to mention. The first one is whether he has any experience of neutrodyning a high frequency resistance capacity amplifier. Of course, we all know, without going into details, the shortcomings of such amplifiers, but they are a certain amount of use after all, although when used with several stages they become unstable. I should like to know whether Mr. Kirke can suggest a method of neutrodyning, and whether it has ever actually been done. The other point is not a technical one exactly. I believe it is a fact that the principle of neutrodyning has been known for several years. In fact, I think I heard something about it in a quiet sort of way about four years ago. For some reason or other it never became used here until comparatively recently, and it would be interesting to know whether this is due to the fact that it was not realised that intervalve capacity was the trouble or whether people started on the right idea and got into trouble with magnetic coupling and abandoned the scheme because they did not think it would work. Generally speaking, the lecture has been so comprehensive that it almost prevents discussion.

Mr. F. L. Hogg: I should like, with other speakers, to thank Mr. Kirke for his most excellent lecture which will be of great value to me. I should like to know if he could help me to solve a difficulty. We have all had trouble when using separate resistance amplifiers at low frequency, when one tries to introduce reaction on the detector valve, particularly in cases where one is using an extremely bad aerial, and it is necessary to use reaction to get any sort of results at all. One gets into great difficulties due to the fact that when you get near the oscillation point it is difficult to keep there and prevent oscillation at a frequency of about 10 or 20 per second or even less than that, perhaps four or five per second. I have been endeavouring for some time past to produce a receiver to conform to certain ideals using a varying number of stages of high frequency and anode rectification for receiving long distance transmission of the greatest possible purity, and I have had tremendous difficulty in eliminating this oscillation trouble, without sacrificing in some way the quality. It seems usually necessary to get over the trouble by using the most horrible method of shunting the resistance in the plate circuit of the detector valve with a condenser or using a shunt reaction coil, which amounts to exactly the same thing. I have tried numerous schemes which various people have suggested, but have not found any satisfactory way of getting over that trouble without having to use a shunt condenser or some equally bad scheme in which one loses a great deal of the quality which one has taken a great deal of trouble to get. I should be glad, therefore, if Mr. Kirke can give me some assistance on that point and the best way of doing it in order to get the absolute maximum possible purity.

Mr. A. E. Bawtree: I should like to ask Mr. Kirke's opinion on one point which is troubling me. I have three stages of low frequency amplification with LS5 valves and resistance capacity, and by mistake, in the first instance, the condensers which were put in were only one-fiftieth of the capacity which they should have been, but I seem to be getting perfect results. When I was advised that the condensers were too small, I did not replace them with proper ones, but I added one of larger capacity to each of the condensers in turn, but the final result on the loud speaker appears to be absolutely nil, and it certainly does not give the great increase in strength of the lower notes which

Digitized by Google

I was told I should get. I cannot account for it, and I wonder if Mr. Kirke can give any explanation which will help on that point. I should like to express my extreme appreciation of the lecture, and anticipate with other speakers that we shall benefit very considerably when we have an opportunity of studying it in detail.

Mr. Maurice Child : There are one or two remarks I should like to make. In the first place, I think it would be of interest to many here if Mr. Kirke would give us some idea as to how he actually arranges his main anode coils in a multi-valve neutrodyne system. It is a little practical point which might be of some assistance to those who have not yet attempted to do it. I have tried many times to arrange coils, but I have found it is not an easy matter, apart from the neutrodyning, to arrange the actual setting of the coils to avoid absolutely any interaction. I have found it a very complicated and difficult job. I was particularly struck with the very pretty way in which Mr. Kirke analysed the transformer action, and I think he is very much to be congratulated on having brought the thing down to such a very picturesque and nice way of looking at it. I was unfortunately not able to follow at the moment what Mr. Kirke said with regard to stalloy, but it was a point which I had intended to raise if the opportunity occurred. I have never been able to understand why stalloy steel has been used for so many years by the manufacturers of intervalve transformers. When one comes to think of it, the actual amount of change of current in the primary of an intervalve transformer is very small, unless one is dealing with fairly high power amplification, and such change of current—and therefore the change of the magnetic state of the iron—being exceedingly small, it is surely necessary to use a material for your core having the highest possible permeability. I understand that stalloy is not of that class of material. Stalloy, I believe, is mainly used for transformers on account of its very special qualities of high resistance to eddy currents, amongst other things, but I do not think in the ordinary intervalve or telephone transformer we are very much concerned with eddy currents. No doubt there is, theoretically, some small loss due to them, but I do not think it is very material. I have made up many telephone and intervalve transformers, and my last experiment was with a transformer in which I did not take the slightest trouble to insulate the various sections of iron at all. I left the iron surface perfectly bare, and relied on the slight oxide to do the work. I find I cannot detect any appreciable difference in the results given by this transformer over those given by a transformer with varnish or paper insulation between the laminations. I have given up the use of stalloy altogether now, and use the softest possible iron I can get. There is another point in connection with transformers, and that is on the question of the losses due to hysteresis in iron. Very frequently in certain types of commercial transformers it is quite possible to show that the iron is working at a very considerable magnetic density due to the strong anode currents relatively going through it, and I should like to know whether Mr. Kirke thinks that is of consequence, or that we may get a rectification effect due to the transformer itself. I may be talking nonsense here, but I should very much like to know whether he can confirm or completely upset my ideas with regard to this last point.

Mr. H. L. Kirke, replying to the discussion, said : With regard to what Mr. Carpenter said about the effect of reactance in the anode circuit of a triode, I should say that he is right. I understand that if the back E.M.F. is out of phase with the current, the resultant dynamic curve will be an ellipse, and the width of the ellipse will depend on the ratio of the impedance in the anode circuit to the resistance of the valve itself. I have used choke-coupled amplifiers of various sorts considerably and have not found any distortion due to doing it. I have two methods of detecting distortion. One is to listen through the piece of apparatus under test, before and after, making suitable arrangements for the signals to be of the same strength and then balance out the fundamental. After the current has gone through the apparatus, any distortion in any piece of apparatus will introduce harmonics. Therefore, if you are listening and a current after going through the apparatus has its fundamental balanced out, if there is any distortion you will get more harmonics or different harmonics. I tested various forms of coupling, and found that within reason, provided normal precautions are taken, there is no distortion. The other method is to use the cathode ray oscillograph. I have done considerable experimental work in that direction, and there is no essential distortion. The whole thing is that it does not matter if the shape of the dynamic curve is an ellipse provided the ellipse does not, anywhere in its excursions, run through any of the non-linear parts of the static characteristic curve, but once it does run into the non-linear part, then it has that effect which Mr. Carpenter has referred to. There was one instance in which I definitely found distortion due to that, and I did not quite understand it. It was only a few days ago, and I was doing some tests on various methods of rectification and trying to find out what is the distortion due to rectification. One of the methods of rectification was with a special two-electrode type of valve which had a very perfect static characteristic. When you put the negative on to the anode, you got no current, but when you put the positive on you got current which was proportional to the voltage. We found that when we used a low frequency choke in the output of this circuit, we definitely got distortion, because apparently the output of the low frequency E.M.F. was out of phase with the low frequency current, and the efficiency of rectification depended largely upon the amount of back E.M.F.; until we shunted the choke with relatively low resistance to neutralise the phase angle and bring it nearly to zero, we did get definite distortion coming in with this and various other types of rectification ; I think that all rectification will depend partly on the back E.M.F. and as to how that varies according to the impedance in the anode circuit. I am carrying these tests further, and if I have anything of interest to communicate I hope to be able to give you a short account of it. With regard to the initial permeability, the figure of 300, as mentioned on the

Digitized by Google

curve, is what I have obtained, and it may be plus or minus 20 per cent. With reference to neutrodynes, I am afraid I have not done very much work on the point which Mr. Carpenter has brought up. The only thing I can say is this—in fact, I can say nothing exactly on the point he has brought forward because I have never actually done a test on it—but with regard to whether this is scientific or not, I really think that experimental tests are very, very useful and very often disprove certain scientific theories, and therefore are probably more useful than science in some ways. There is no doubt that using reaction from the detector valve or a separate reaction valve, you definitely benefit, particularly if you do not wish to put reaction near the point of instability.

With regard to Mr. Walker's point as to neutrodyning and perfect balance, one point is that you seldom get perfect screening between coils, and the other point is that you do not use neutrodyning as a perfect balance, and therefore you cannot expect to get perfect balance. A third point in this connection is that possibly, due to small phase differences and small electrostatic couplings which are not suspected, you are not getting a true phase balance. You probably get a true balance with regard to amplitude, but the phases are not in the right relationship and the introduction of a small resistance in series, or a shunt with the neutrodyne condenser, might improve the balance. I do not know whether that is true, but it might be.

Mr. R. E. H. Carpenter : It does.

Mr. Kirke : I believe it is used in some forms of transmitter work. The point with regard to resistance capacity high frequency amplification is, I think, as Mr. Walker rightly said, that although magnification is small, it is fairly stable, and there is only one handle. To borrow a phrase from Mr. Carpenter, it provides something for Grandmother Jones—it is ideal. With regard to superheterodyne, I have had no actual experience of the superheterodyne transformer of the iron core variety. I have used the resistance method—the resistance transformer coupling—but I have no doubt that, provided the various details are taken account of, the main points to bear in mind with regard to design are very much the same as for the low frequency transformer. There is one point to bear in mind in superheterodyning and things of that description, and that is the more you step up the less will be the back E.M.F. of the primary winding, because its impedance will be lower ; therefore, the less will be the back E.M.F. and the tendency for reaction.

With regard to Mr. Ashbridge's point about neutrodyning and high frequency resistance capacity amplifiers, the only way in which I have had anything to do with this is low frequency. That is rather Irish. Actually, I was thinking about the question of feeding back in connection with resistance capacity amplifiers, and we got over it by reducing the impedance of the valve before and so bringing the resistance of the grid down. What we did was to introduce a reaction condenser in the manner in Fig. 19.

Actually, we used the grid filament of an ordinary power valve, and that was all right except that there was a tendency to howl at high frequencies. We took some curves, and one particular curve was like Fig. 20a, without the condenser, whilst with the condenser the curve was something like Fig. 20b. The measurement was actually at about 6,000 cycles, and we immediately came to the conclusion that the phase angle of the circuit changed over at 6,000 cycles, which was the natural frequency, and became the opposite phase angle and so gave us a reaction in the reverse direction. We put a high resistance in series *R* (Fig. 19) with the neutrodyne condenser in order to overcome that, and that was nice because we could alter our ratio of resistance to capacity and so alter the phase angle. In the end, we got a curve like Fig. 20c, and we raised the natural frequency of the transformer, and got nearly a straight line, up to 10,000 cycles, which was fairly suitable for the job in hand. It was not quite good enough, however, and we went to the other method, *i.e.*, using a low impedance valve. It is, however, a possible method of neutralising the capacity effect at high frequency of a resistance amplifier. At one time I was doing some short wave work—100 metres—and we got out an amplifier, using a V24 type of valve, of

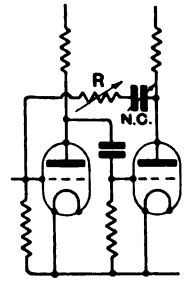

Fig. 19.

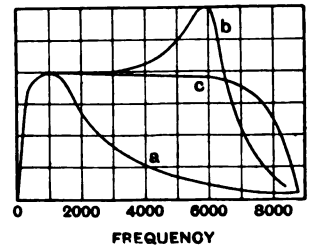

Fig. 20.

low capacity and a special intervalve transformer. It was an ordinary wire-wound transformer wound with resistance wire, and we used various forms of reaction to stabilise this thing, which used to oscillate. I used eventually a trick coupling consisting of a small condenser connected to two grids in front of it. In that way we got a special arrangement and excellent reaction. We reduced the anti-reaction and put in reaction. With regard to the growth of the craze, if I may so call it, for neutrodyning, my opinion is this : In the old days everybody just used to oscillate and undoubtedly, provided nobody else minded, it was an excellent way to get a distant station. Since broadcasting started, however, oscillating has been rather unpopular in certain circles, and now we have a lot of people using sets who have very little skill and who would not use wireless at all but for broadcast. That started the craze for getting a receiver which was fairly stable over a big wave range and at the same time give long distance reception.

With regard to Mr. Hogg's point that when he used bottom bend rectification with a resistance in the anode circuit for low frequency and long distance reception he got trouble with oscillation, I am not sure whether he used a small condenser across the

Digitized by Google

resistance or not. I always use a condenser of the order of .0002μF when using high frequency, and it not only improves the detector efficiency but it also prevents the high frequency getting past to the resistance amplifier. Although the resistance amplifier is not much good at 300 metres it does amplify perhaps 1½, 2 or 3 times, but at high frequency, unless you take steps to stop it, you will get what I call a squiggering effect. The other possibility is that as soon as you oscillate your feed tends to rise due to the curvature of the valve characteristic, particularly if you are using the bottom bend of the valve. Then the voltage drops, and directly the voltage drops the reaction becomes less and it stops oscillating, and it is a question of how quickly the H.T. can rise in the plate circuit, and that is what we call the squiggering effect. I think that is probably the trouble. It might also be due to the fact that he has not got condensers across the H.T. battery, although I should think he has.

Mr. Bawtree brought forward the point of cut down at low frequency due to intervalve condensers. That is very much the same in effect as the cut-down due to lack of inductance in a choke amplifier. The only reason that it cuts down is that if the condenser is small it has a fairly high impedance, and there is a certain amount of potential difference drop across it. That p.d. is 90 deg. out of phase with the main p.d., and has not as much effect as it would if it were not 90 deg. out of phase, with the result that you can have a smaller condenser than you think. It is quite possible for a loud speaker to cut off at frequencies below 300 cycles. Therefore it is possible that you would not feel the benefit of using larger condensers.

With regard to Mr. Child's remarks as to the placing of the main anode coil in multi-valve systems when neutrodyning, I have not done much with that myself, but on each occasion recently when I had to build a high frequency amplifier, I was so dead keen on getting the thing thoroughly efficient that I took enormous precautions and screened every coil completely. I have found binocular coils extremely efficient because you localise the feed. These coils have two long solenoids in the same direction connected in series. If the fields are in opposite directions the tendency will be for the fields to be neutralised outside, and that is quite a useful thing for balancing with neutrodynes. Beyond that, I am afraid I have had no experience. In regard to the actual placing of the coils, I have always taken the precaution of screening everything. The other point was with regard to losses with stalloy in transformers. I have done a certain amount of measurement of hysteresis and eddy current losses, and there is definitely a sign that there is a considerable eddy current and hystersis loss in stalloy. In my measurements on transformers, the phase angle is of the order of 60 deg., but it varies according to the amount of flux density in the iron at the time, and it varies with all sorts of things, according to how much D.C. you put through the transformer yesterday or the day before, for instance. That is an actual fact. I have given a transformer to somebody to test with an ordinary D.C. galvo test, and the inductance has changed about 10 per cent. afterwards. With regard to eddy current and hysteresis loss, I have never worried where the soft iron is good, but for experimental purposes when a man builds his own transformer he can afford to take certain risks and build certain things in a circuit where a commercial man might fear to take them. On the question of distortion due to iron, what I do is to get a cathode ray oscillograph and put a sine wave into the iron and look at the wave form. Distortion did not occur up to a density of 5,000 lines per sq. cm., after which distortion started and increased. That was with no D.C. through the transformer. I have done very few experiments of this kind, but I did find in one experiment about a year ago that the D.C. does not matter very much provided you do not put too much A.C. through. In that case, at low frequencies the variation of flux density is not high. If, however, the change of flux density was likely to be high, then it would be a bad thing to put D.C. through because you will definitely get distortion. For that reason, in my amplifiers I always avoid having D.C. through the transformers by feeding through a choke and through a condenser.

Digitized by Google

Inductance Coils Quantitatively Compared.

By A. L. M. Sowerby, B.A., M.Sc.

Part II. **[R240**

THE measurements embodied in Part I. of this article may be taken as a general survey of all types of inductance coil; and if solenoids are the only coils seriously considered, this is so merely because they alone are efficient enough to repay the work of investigation.

There are four independent variables involved in designing a solenoid coil to a definite inductance-value—they are as follows:

1. The amount and kind of dielectric to be used in the construction of the former, and as covering to the wire itself;
2. The shape, or ratio of diameter to length (D/l ratio);
3. The gauge of wire; and
4. The spacing between turns.

Of these, the effects of 1, 2, and 4 are the subject of direct measurements in the present article, and although it is not pretended that a full examination of any of these points has been made, yet sufficient information has been obtained to be of material assistance to those who wish to design coils of high efficiency and reasonable compactness.

1. Effect of Dielectric.

The figures on this point were obtained by Mr. Vaughan-Spencer, and are included here by his permission. The writer takes this opportunity of acknowledging Mr. Vaughan-Spencer's very valuable assistance in most of the remaining measurements.

A comparison was made in the manner described in Part I., between two coils carefully adjusted to the same inductance, and as nearly identical as possible in shape, size, wire-gauge, and spacing, the one being wound with bare wire on a skeleton former, in approved "low-loss" style, and the other wound with heavily-covered bell wire, turns touching, on a waxed cardboard tube. Any increase in the H.F. resistance caused solely by dielectric losses should be clearly shown by this comparison.

The results were as follows:—

(A) *Description of Coils.*

1. "Low-loss Coil," 4.4 in. diameter hexagonal skeleton former lightly constructed of wood and ebonite. Wound with 60 turns of 20 S.W.G. bare tinned copper wire, 14 turns per inch. Length 4.3 ins.

2. "Bell-wire Coil," 4.5 in. diameter waxed cardboard former. Wound with 59 turns of 20 S.W.G. tinned copper wire, covered with rubber and a very thick cotton covering, heavily impregnated with wax, 14 turns per inch approximately. Length 4.1 ins.

(B) *Voltmeter Readings.*

Coil.	Tuning. Condenser. (degrees)	Deflection.
"Low-loss" ...	139	1,270
"Bell wire" ...	139½	1,240

Frequency of measurements about 800kC or 375 metres.

Mr. Vaughan-Spencer was sufficiently surprised by this result, which is in direct opposition to the current belief on the point, to confirm it by measurements of several other "bell-wire coils" of different shapes. These other measurements confirmed that given above, the figures obtained being almost the same. Those given are chosen for inclusion here because they refer to two coils deliberately constructed to be identical in all respects save that of dielectric.

Since the increase in effective H.F. resistance due to the presence of this unnecessarily large amount of dry dielectric amounts to less than 2.5 per cent., the effect of dielectric losses in single-layer coils designed for the broadcast wavelength may safely be neglected in all but the most critical work. In multilayer coils, where turns at greater potential difference are in juxtaposition, the effect may probably be larger. The writer hopes later to perform

Digitized by Google

similar comparisons at much higher frequencies (6,000 to 10,000kC) at which dielectric losses may reasonably be expected to become serious.

In all work done after the above result was obtained, no attention was paid to the absence or presence of wax, cotton, silk or cardboard as dielectric.

Effect of Moisture.

As already remarked in Part I., moisture largely increases the H.F. resistance of a coil close-wound with cotton-covered wire; the writer is of opinion, in the temporary absence of experimental data on the point, that this is due to *insulation* losses rather than to dielectric losses. To rule out irregularities due to the moisture, all formers, though bought as "waxed," and all covered wire, were well boiled in wax before winding the coils used in the remaining measurements described below.

2. Effect of Shape of Coil (D/l ratio).

A number of coils, of D/l ratio varying from 0.75 to 8.6, were made up and measured in the usual manner. In order to attain so wide a range of D/l ratios, it was found advisable to use two gauges of wire, the windings being chosen so that there was a large overlap of D/l ratio between the two series.

TABLE I.

Coil No.	D/l.	Diam. ins.	Length ins.	Wire. S.W.G.	Turns.	D.C. resistance (apprx.) ohms.
1	0.75	2½	3.35	22	85	0.725
2	1.12	3	2.68	22	67	0.685
2A	1.09	3	2.75	22	67	0.685
3	1.55	3½	2.25	22	53	0.632
4	2.17	4	1.84	22	47	0.640
5	2.73	4½	1.65	22	42	0.644
6	3.56	5¼	1.47	22	37	0.661
7	1.36	2	1.47	36	77	7.1
8	2.05	2½	1.22	36	61	7.05
9	2.82	3	1.06	36	52	7.21
10	4.15	3½	0.845	36	43	6.95
11	5.35	4	0.75	36	39	7.21
12	6.25	4½	0.72	36	35	7.25
13	8.6	5¼	0.61	36	31	7.51

All coils are close-wound, and cardboard tubes and wire both boiled in wax in all cases except 2A, which was left unwaxed for comparison.

The figures for D.C. resistance are calculated from wire tables, and are not the result of measurements.

Table I. gives particulars of the coils, and Table IA. the results obtained on measurements.

TABLE IA.

Coil No.	C. (degrees)	Deflection at resonance (microamps)	Low-loss Coil Deflection.
1	29.2	1340	1400
2	28.5	1340	1400
2A	29	1345	1400
3	28.5	1340	1400
4	29.1	1320	1395
5	28.5	1335	1395
6	28.5	1325	1400
7	29.0	1130	1400
8	29.3	1150	1400
9	28.5	1130	1400
10	29.1	1145	1400
11	29.5	1130	1400
12	29.0	1110	1400
13	28.1	1105	1400

The reading for the low-loss coil was checked immediately *after* each measurement in order to make certain that the oscillator output was reasonably constant. The figures for coils 4 and 5 are plotted as 1325 and 1340 respectively.

The figures of Table IA. are plotted in Fig. 1, the diameter-length ratios as abscissæ, and the deflections in microamps as ordinates. It will be seen at once that both lines are substantially horizontal, though both show a tendency to fall at high values of D/l.

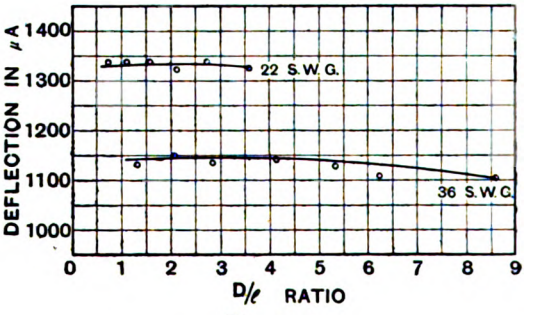

Fig. 1.

There is thus no indication of any optimum value for the D/l ratio, so that all solenoid coils of the same inductance, wound with the same gauge of wire and with the same spacing between turns, may be taken as identical, whatever their shape. The fall in efficiency at high D/l values appears to be a secondary effect, and will be referred to again in the section dealing with spacing.

Digitized by Google

Incidentally, the popular prejudice against waxing coils is shown, by comparison of Coils 2 and 2A, to be unfounded; the difference is within the limit of variation of coils nominally identical.

3. Effect of Spacing.

To investigate the effect of spacing between turns, two sets of coils, one wound with 22-gauge wire and the other with 28-gauge, were prepared. Acting on the results of previous experiments, the influence of dielectric was ignored to the extent of obtaining the first three spacings for each gauge by winding coils, turns touching, with enamel, double silk, and double cotton covered wire respectively. Further coils were obtained by "double-winding," putting on two wires simultaneously and removing, after winding, the wire not required.

TABLE II.

Coil No.	Condenser. (degrees)	Deflection on resonance. (microamps)
1	105	810
2	106	875
3	106	955
4	106	985
5	106	950
6	107	750
7	106½	830
8	106	895
9	105½	935
10	106½	910
11	106	905

The coils were measured twice, each time going through the whole series in the order given above, and no variations greater than 5 microamps (the smallest variation observable on the 0-1.5 milliammeter used) were observed.

Table II. shows the results of the measurements, and Table IIA. gives a full description of the coils.

Curves are shown in Fig. 2 of these results, "surface-spacing in diameters" being plotted as abscissæ, with deflections in microamps, as ordinates.

Both for 22 and 28-gauge wire there is an optimum spacing, the maximum of the curve being more sharply defined for the thinner wire, as might be expected. For the two cases examined, this optimum spacing is more nearly the same when expressed in wire-diameters than when expressed in mm. —hence the scale chosen for plotting. The maxima come as follows:—

For 22-gauge wire at 1.4 diameters, or 0.875 mm. between surfaces;

For 28-gauge wire at 1.2 diameters, or 0.5 mm. of adjacent turns.

These maxima will appear at slightly different spacings, in all probability, on formers of different diameters—the writer would anticipate that slightly wider spacing would be required on a former of larger

TABLE IIA.

Coil No.	Wire.	Length. (cms.)	Turns.	Approx. D.C. Resistance. (ohms.)	Centre-Spacing. (mm.)	Surface-Spacing. (mm.)	Surface-Spacing. (diameters).
1	22 ENAM.	3.5	56	0.574	0.625	0	0
2	22 D.S.C.	5.0	62	0.635	0.806	0.185	0.296
3	22 D.C.C.	8.1	72	0.736	1.12	0.507	0.811
4	22 D.C.C.	11.7	83	0.850	1.41	0.795	1.27
5	22 D.C.C.	18.9	99	1.011	1.91	1.30	2.08
6	28 ENAM.	2.0	48	1.76	0.417	0	0
7	28 D.S.C.	2.45	51	1.87	0.48	0.065	0.156
8	28 D.C.C.	3.58	56	2.05	0.64	0.226	0.542
9	28 ENAM.	5.4	63	2.31	0.86	0.448	1.07
10	28 ENAM.	6.05	66	2.42	0.916	0.508	1.22
11	28 ENAM.	0.8	72	2.64	1.11	0.705	1.69

All coils wound on 3 in. waxed card formers.

"Centre-spacing" means distance between centres of successive turns.

"Surface-spacing" means distance between surfaces of successive turns, measured in mm. (Col. 7) or in terms of the diameter of the wire with which the coil is wound (Col. 8).

The diameter of the wire, being less in each case than the published figure for the gauge, is taken as the diameter of enamelled wire; *i.e.*, 0.625 mm. and 0.417 mm. respectively.

Digitized by Google

diameter, owing to the greater potential difference between turns. It is to this effect that he attributes the slight falling off in efficiency shown by the coils of high D/l ratio in Table I.; the spacing was certainly closer than the optimum on the 3 in. former, and still further removed, on this assumption, from the optimum value for the larger formers. Even in the case of the 36 D.C.C. wire, where small variations in spacing may be expected to make large changes in the efficiency, the falling off is small, showing that the change in "effective spacing" is likewise small. Thus only small divergences in optimum spacing-values are to be expected in consequence of changes in the diameter of the coil.

4. Effect of Gauge of Wire.

On this point the writer has no new facts to offer; it is already well known that, up to 22 gauge at least, the thicker the wire the better the coil. But it is of some interest to note that before a fair comparison of the relative merits of different wire can be made, the optimum spacing for each gauge must be found; 22 D.S.C. wire, for example, if close-wound, makes a coil less efficient than the optimum of 28-gauge wire.

Further, provided that the best spacing is used, the gauge of wire makes less difference than is popularly supposed; 22 gauge is less than 6 per cent. better than 28. (Fig. 2.)

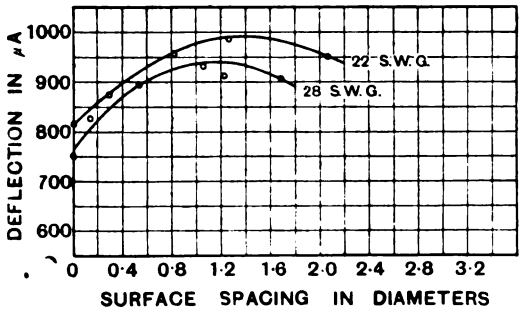

Fig. 2.

In practice, a limit to the thickness of the wire is soon reached, on account of the rapidly increasing bulk of the coil. Not only is the wire itself thicker, but a greater space has to be left between turns, this space increasing even more rapidly than the wire-diameter itself. Since, further, this wider spacing necessitates an increase in the number of turns to reach the same inductance, the bulk of the coil speedily becomes impossibly great.

The writer has not investigated coils wound with wire thicker than 22 gauge, chiefly on account of the difficulty in obtaining even spacing with stiffer wire.

5. The Practical Design of Coils.

The measurements here given show that the task of designing a single-layer coil for the broadcast wavelengths is less involved than is normally supposed. Since neither dielectric losses nor shape need be seriously considered as factors in efficiency, it only remains to choose a moderately stout gauge of wire, and wind it, at somewhere near the optimum spacing, to the required inductance, using any reasonable former. Further, since the spacing-efficiency curve is very flat-topped for the thicker wires, the natural spacing afforded by close-winding double cotton covered wire is near enough for most purposes, giving actually about 95 per cent. of the efficiency, if 22-gauge wire is chosen, of the "low-loss" coil taken as standard.

It should not be forgotten, in this connection, that the anode-rectifier used for measuring, even with the addition of six or eight feet of aerial, probably introduces less damping than almost any apparatus connected to a coil in an ordinary receiver, so that any small differences shown by these measurements would be suppressed in practical use.

On balance then, the old-fashioned solenoid, well waxed, holds the field for efficiency combined with convenience; the multilayer coil is hopelessly inefficient, even when turns and layers are well spaced, while the extra efficiency of the "low-loss" coil is minute, and, owing to the trouble of making, absurdly dearly bought.

Digitized by Google

The Cause and Elimination of Night Errors in Radio Direction Finding. [R510

Paper read by R. L. SMITH ROSE, Ph.D., M.Sc., and R. H. BARFIELD, M.Sc.
before the Wireless Section, I.E.E., on 5th May, 1926.

Abstract.

THE paper is communicated by permission of the Radio Research Board, and describes experiments carried out with a view to obtaining more conclusive evidence as to the causes of apparent variations of bearings observed under certain conditions with wireless direction-finders.

Much of the authors' work in the past few years has been the investigation of "night effect" in direction-finding, and methods have been developed to distinguish between the electric and magnetic components, with separate measurements of their intensity and direction. It is now evident that the variations are caused by the action of the horizontal components of the electric force in the downcoming waves on the horizontal parts of the D.F. loops. Another portion of the work has been to ascertain whether the downcoming waves have been laterally deviated from the great circle plane through transmitter and receiver. This matter is one of practical interest, for apparatus which shows the absence of lateral deviation provides a direction-finding system free from variable night errors.

The problem involves the production of apparatus which will measure the horizontal component of the direction of arrival of wireless waves, irrespective of their angle of incidence at the earth's surface or their state of polarisation.

Several methods which have been suggested for tackling this problem are then described, and early experiments on the subject at the Radio Board's Station at Ditton Park, near Slough, are discussed.

The arrangements finally described in the paper are a modification of a system patented in 1919 by F. Adcock, in which the aerials are mounted and connected so as to ensure that only the vertical parts are acted upon by the arriving waves. The simplest form which the system can take is probably that of Fig. 2*.

The connections shown should have the effect of rendering any E.M.Fs. set up in the horizontal parts of the system equal and opposite with regard to the "aerial—field-coil—earth," so that the net voltage induced in the circuit is that due to the phase difference of the voltages in the two vertical limbs (of Fig. 2*b*, which shows one of the pair of aerials). Since the E.M.F. follows a cosine law, the pairs of aerials may be used with a radiogoniometer and search coil, as in the Bellini Tosi system. The arrangement of Fig. 2 was found to be unsatisfactory. The horizontal E.M.Fs. were not balanced out—probably due to stray capacities—and gave rise to serious errors. By way of improvement an attempt was made to screen the whole of the horizontal portion by means of a screening trunk formed of a number of parallel wires, the whole screen projecting a considerable length beyond the aerial, while at their inner ends the wires were joined to the metallic lining of a screened

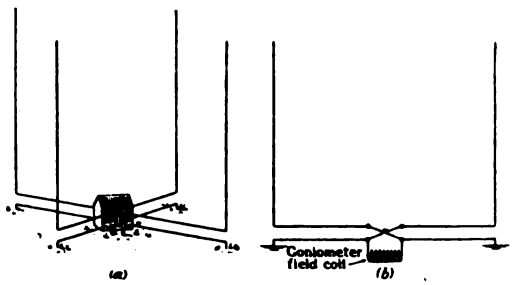

Fig. 2. (*a*) *Sketch of the system.* (*b*) *Elevation of single pair of aerials.*

* The authors' original figure numbers are adhered to throughout this abstract.

Digitized by Google

operating hut. This arrangement was also unsuccessful, for although the screen effectively shielded the horizontal portion, the secondary field due to the screen itself set up E.M.Fs. in the vertical limbs of the aerials.

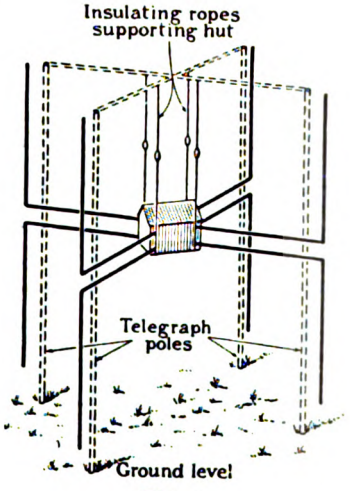

Fig. 4.

The alternative arrangement described by Adcock was therefore adopted. In this case the vertical aerials are comprised of complete Hertzian oscillators with leads taken horizontally from their mid-points to the apparatus in the screened hut. To maintain symmetry the hut with the apparatus and operator was raised to the level

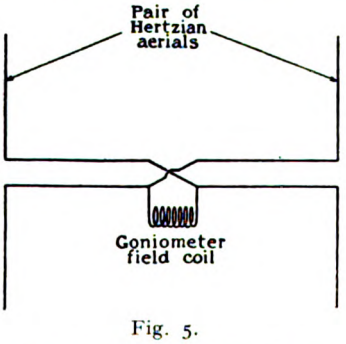

Fig. 5.

of the centre of the system, about 20 feet above the ground. The aerials were supported on poles 44 feet high placed at the corners of a 20-foot square. The receiving hut was suspended from cross beams on the poles by insulated steel ropes to minimise its capacity to earth. The arrangement is shown schematically in Fig. 4, while the connections of one pair of the Hertzian oscillators is shown in Fig. 5.

The balancing out of the effects in the horizontal limbs was verified first by measuring the directional properties of the individual aerials and secondly by comparing the induced currents in the upper and lower halves of the same aerial. The latter test revealed a superiority of 2 or 3 per cent. of the lower half over the upper, due probably to different capacities to earth. This

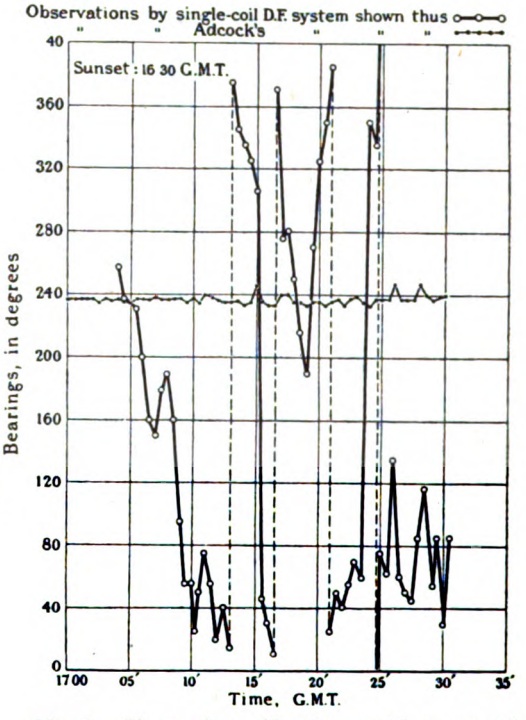

Fig. 6. *Observations of bearings on Bournemouth on 8th November, 1925 (wavelength 386 metres).*

could probably have been eliminated by a slight shortening of the lower half to secure electrical equality. Other tests showed that the receiving properties of the aerials were not materially influenced by slight irregularities or differences in the neighbouring supporting structures. Tested under conditions giving freedom from night errors the apparatus was found to be subject to a permanent error of the same order as that experienced on closed coil systems in use in the same field, due to the local surroundings.

Digitized by Google

In order to investigate lateral deviation, observations were made on certain transmissions which were known to give rise to night errors. The apparent bearings were observed simultaneously on the apparatus described and on an ordinary single coil direction-finder in another hut 100 yards away. The most serious night variations were obtained on Bournemouth and Cardiff. The results of two sets of simultaneous observations are shown in Figs. 6 and 8.

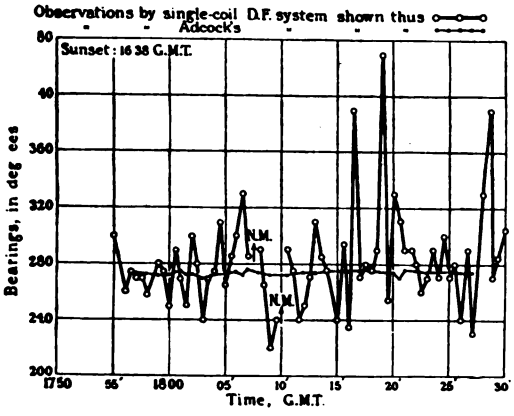

Fig. 8. *Observations of bearings on Cardiff on 26th January, 1926 (wavelength 353 metres).*

In Fig. 6 it is seen that the single coil system showed a rotation of apparent bearing through more than 360°, while on the Adcock system the extreme variation was 14°. The results on Cardiff in Fig. 8 show the same effect, although the variations are less violent.

From these results it is to be concluded that lateral deviation plays a negligible part in producing large and variable night errors, as are obtained on single coils, and that these errors are entirely due to the arrival of downcoming waves polarised with the electric force horizontal. The slight residual errors shown for the Adcock system (up to $\pm$ 7°) may be caused by a slight imperfection of balance, or it may actually be a residual amount of lateral deviation. It may be shown that if two waves are arriving with varying phases and direction of travel, in vertical planes separated by an angle ψ, the total apparent variation in the resultant direction will greatly exceed ψ. The apparent variations of $\pm$ 7° is probably an indication of a much smaller real lateral deviation. A slight lateral difference of path is almost certain to exist, as the horizontal wave on land is nearly always slightly deviated by local irregularities (trees, etc.). The investigations described in the paper form a useful confirmation of the magneto-ionic theory recently introduced (by Appleton and Barnett in England and by Nicholls and Schelling in America) in which rotation of the plane of polarisation of the downcoming wave is ascribed to the influence of the earth's magnetic field on the motions of ions in the upper atmosphere.

From the results shown, it is concluded that Adcock's four-aerial system may be used as a direction-finder giving the true direction of the great-circle plane of arrival of waves whatever their state of polarisation or angle of incidence relative to the earth.

It should have important applications as an accurate direction finder under night conditions or for observing signals from aircraft at high angles of elevation, when the ordinary closed loop is subject to large errors. It would, in practice, be preferable to have the receiving gear and operator located on or near the ground, and several methods of securing this are in view for test as soon as possible. An appendix by Mr. F. Adcock, M.B.E., B.Sc., deals with "Some Early Observations on Aircraft with the Four-Aerial Direction-Finder."

In the tests described an aeroplane flew at a moderate altitude and at distances of 3 to 8 miles from the direction-finding station, where observations were made on an ordinary loop and on the four-aerial system. Errors of up to 40° are shown in a table for the closed loop, while the maximum error for the four-aerial system is 6°. The errors of the loop were reversed when the direction of flight of the transmitting aeroplane was reversed.

Digitized by Google

Audio-Frequency Measurements.

Extracts from a Paper read before the Institute of Electrical Engineers on 29th April, 1926.

[R290

AN interesting and informative paper on "The Frequency Characteristics of Telephone Systems and Audio-Frequency Apparatus, and their Measurement," was read before the I.E.E. on 29th April, by Messrs. B. S. Cohen, A. J. Aldridge and W. West, of the G.P.O. Research Department at Dollis Hill.

Much of the paper is concerned with line-telephone practice, but a large part is of considerable wireless interest, dealing with loud-speakers and low-frequency intervalve transformers.

Various methods are described for the direct and indirect production of constant acoustic output over the audio range.

Of the indirect methods, *i.e.*, those consisting of the electrical generation of the requisite frequency, the use of an unusual form of valve generator is discussed. The requirements are a constant output over a continuously variable frequency from, say, 0 to 5,000 cycles. This is secured by means of two radio frequency oscillators arranged to beat with each other, the beating output being used for the required audio frequency. The circuit diagram is shown in Fig. 7,* which also shows the method of taking photographic records. Each oscillator circuit comprises a grid coil L_2 of 50,000μH, coupled to an anode coil of 20,000μH, tuned by C_1 of about 0·001μF. A variable condenser C_2 of 0·0005μF maximum is in parallel with one of the condensers C_1 to cover the beat range of about 50,000 cycles. Output coils of L_3 of 10,000μH introduce the radio frequencies in the amplifying valves V_2, which serve to prevent, as far as possible, interaction between the oscillators.

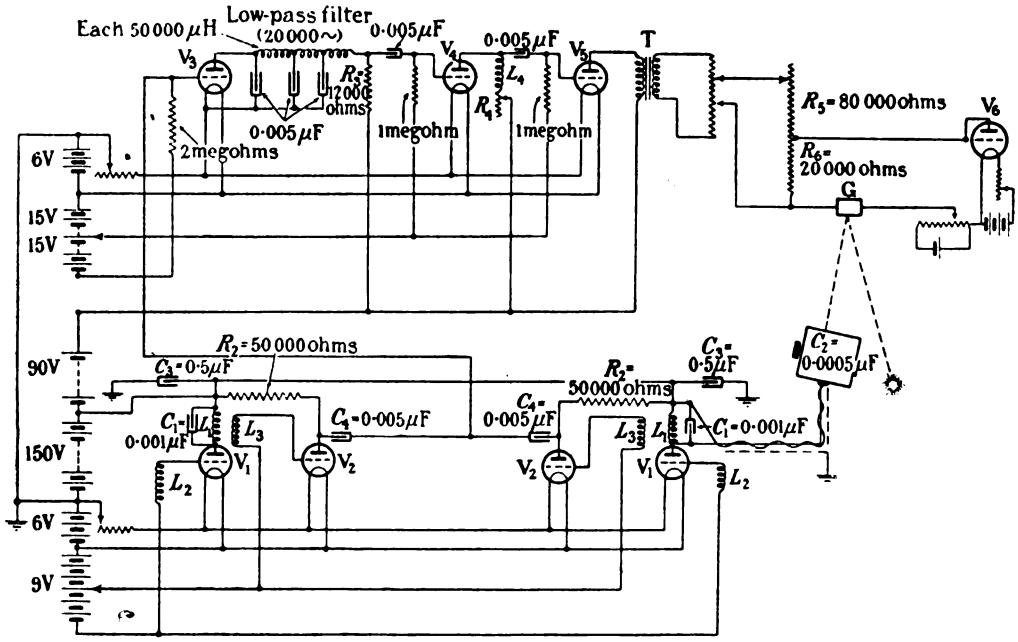

Fig. 7. *Diagram of the circuit used.*

* The author's original figure numbers are adhered to throughout this extract.

Digitized by Google

Each oscillator and its amplifier is also enclosed in an iron box. The high frequencies are taken by resistance capacity coupling and a common input lead to the grid of the detector V_3 operating on anode bend rectification. A low-pass filter in the anode circuit, with a cut-off at about 20,000 cycles, serves to reduce to negligibility the

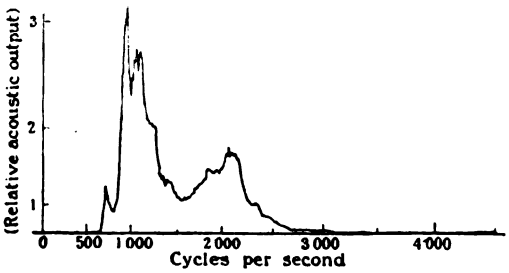

Fig. 21.

high frequencies in the L.F. output, which is brought by two stages of resistance capacity coupling to the output transformer T. This consists of interleaved wave-wound slab coils built on 1-inch square cores of stalloy stampings, the secondary terminating on a non-reactive load of 800 ohms. There still being a tendency for the output to fall off at higher frequencies, which is remedied by the 0.2H air-cored coil L_4, which is in

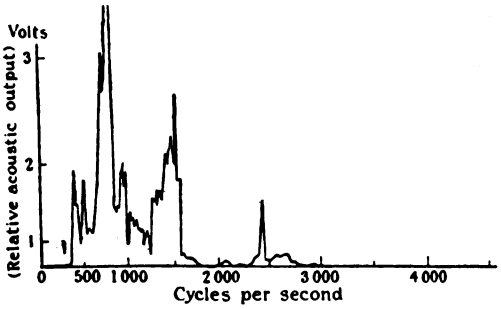

Fig. 22.

series with R_4, gives the circuit impedance a rising characteristic with frequency. The output (f) frequency of the oscillator is shown in a curve to be practically entirely constant over the specified range.

Extensive results are described and illustrated, those of wireless interest concerning loud-speakers and intervalve transformers.

Fig. 21 is the frequency characteristic of a horn-type loud-speaker having a circumferentially corrugated diaphragm, with its centre connected to an armature. The horn expanded from an internal cross sectional area of 0.32 sq. in. to one of 0.5 sq. ft., the axial length being about 20 in. This was

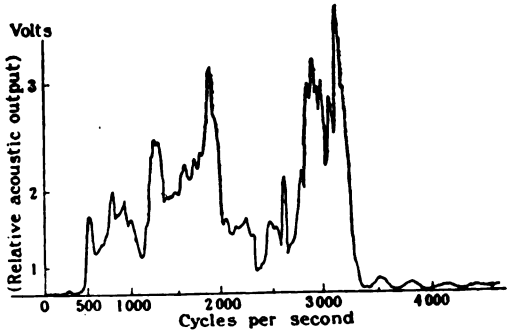

Fig. 23.

taken in the open air at some distance from buildings.

Fig. 22 is also of a horn type, with stalloy disc diaphragm. The horn was of metal, the extreme cross-sections being 0.25 sq. in. and 1 sq. ft., and axial length of about 28 in.

Fig. 23 is of a telephone headgear receiver used as a loud-speaker, with an exceptionally well-designed horn, which expanded, according to an exponential law, from a cross-

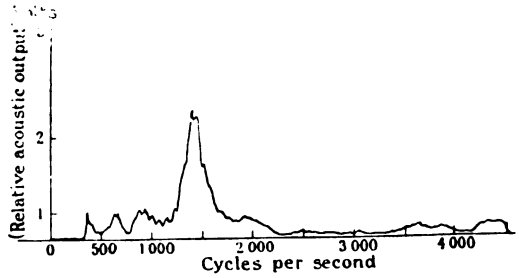

Fig. 24.

section of 0.2 sq. in. to one of 1 sq. ft.; the axis was straight and 3 ft. in length.

Figs. 24 and 25 are for hornless patterns. That of Fig. 24 was of pleated diaphragm type with a diameter of about 1 ft. That of Fig. 25 was umbrella-shaped and very light. In both cases the centre of the diaphragm is connected by a pin to the armature of the electro-magnet system.

Digitized by Google

Figs. 22, 23 and 24 were taken in a cabinet which had been draped to minimise sound reflections. Fig. 25 was taken in a large room without any reflection precautions, which may have modified the characteristics.

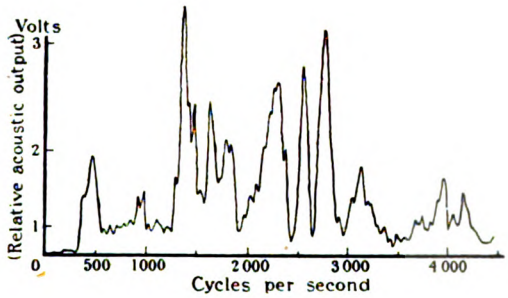

Fig. 25.

As regards L.F. amplifiers and intervalve transformers, results are given of measurements with the transformers in circuit with a valve, and also for a test circuit in which the anode impedance of the valve is replaced by a non-inductive resistance. It is pointed out that the performance of the transformer depends on the circuits with which it is used. The especial points are (*a*) the impedance of the valve in its primary circuit; (*b*) the capacity load on the secondary; (*c*) the presence of grid current in the secondary.

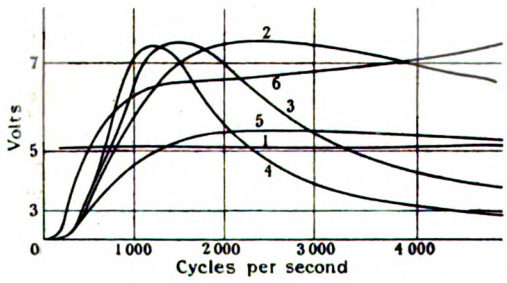

Fig. 37.

The anode impedance of the second valve may also exert an influence, which has not been investigated.

Fig. 37 shows the performance under different conditions of transformer *A*, of the ordinary type and commercial manufacture, with 4 to 1 turn ratio. Curve 1 is the oscillator output, curve 2 the performance of the transformer normally connected (*IP* to anode, *OS* to grid). Curves 3 and 4 were with loads of 100 and 200$\mu\mu$F respectively on the secondary, and curve 5 with 50,000 ohms on the primary. A valve of 20,000 ohms impedance was used in the primary; this being replaced for curve 6

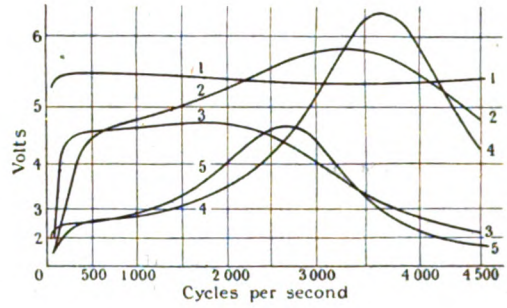

Fig. 38.

by one of 6,000 ohms, with normal connections.

Fig. 38 is for transformer *B*, also of commercial manufacture with 4 to 1 ratio. It was of slab coils round a heavy closed iron core, and from its construction exceptionally high magnetic leakage was to be expected. Curve 1 is oscillator characteristic; curves 2 and 3 the performance with normal connections and with reversed secondary respectively, with a 20,000-ohm valve. For 4 and 5 a 6,000-ohm valve was used, curve 4 with

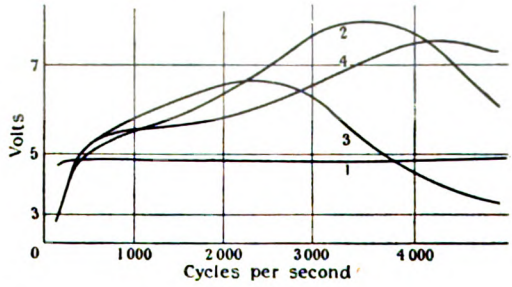

Fig. 39.

normal connections, and 5 with reversed secondary. Capacitative load on the secondary is illustrated in Fig. 39, where curves 1 and 2 are as for those of Fig. 38. Curve 3 was taken with a capacity load of 50$\mu\mu$F on the secondary, and curve 4 with a load of 1,000$\mu\mu$F on the primary.

A mathematical appendix deals with the equivalent circuits of intervalve transformers.

Digitized by Google

Mathematics for Wireless Amateurs.

By F. M. Colebrook, B.Sc., A.C.G.I., D.I.C. **[510**

(*Continued from page 287 of May issue.*)

BEFORE going on to consider the combination of positive and negative numbers in general, it will be convenient to learn a little more shorthand (for that is what the use of mathematical signs really amounts to).

(i.) $a > b$

means that the number a is greater than the number b. Notice that the thin edge of the wedge points to b, which is, so to speak, the thinner of the two numbers.

(ii.) $a < b$

means that the number a is smaller than the number b. The same mnemonic* will serve.

There are some variations of these signs which are useful for numbers which can vary in size under given conditions.

(iii.) $a \ngtr b$

means that a is *not greater than b, i.e.*, a can be any number equal to or less than b. Notice that the "not" is suggested by the crossing out of the "greater than" sign.

(iv.) Similarly $a \nless b$

means that a is *not less than b, i.e.*, can be any number equal to or greater than b.

(v.) In the same way $a \neq b$

means that a is not equal to b.

(vi.) Finally, it is necessary to define a new idea, or a new word, which comes to the same thing. *The difference between two numbers is that number which must be added to the smaller of the two to make it equal to the larger.* Thus the difference between two and five is three, three being the number which must be added to the smaller, two, to make it equal to the larger, five. We are not here concerned with sign at all, nor with the combination of positive and negative numbers. Difference expresses a simple arithmetical relation between the sizes of numbers, regardless of sign. In symbols the difference between a and b is written

$$a - b.$$

* Mnemonic means "assistance to memory."

The general case of the combination of positive and negative numbers can now be considered, and with the help of the ideas already acquired it should not prove difficult.

The combination of the positive number a and the negative number $-b$ can be written

$$+a-b$$

or more shortly still,

$$a-b.$$

In terms of our journey units this means a journey of a inches to the right followed by a journey of b inches to the left. This is illustrated in Fig. 4 (a) for the case $a > b$. The length of the resulting journey will obviously be the difference between a and b, *i.e.* $(a-b)$,

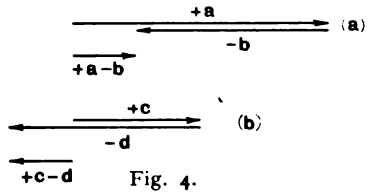

Fig. 4.

and its direction, *i.e.* sign, will depend on whether we go more to the right than to the left or *vice versa*. In other words, the sign of the resulting journey will be the sign of the greater of the two numbers, a and b, just as in a human partnership the stronger of the two partners will get things his own way. In the case illustrated in Fig. 4 (a), a wins, *i.e.*, the sign of the resultant journey is positive. In symbols,

$$a-b=+(a-b).$$

On the other hand, for two other numbers c and d, such that $c<d$ (Fig. 4 (b)) :

$$c-d=-(d-c)$$

or the resultant journey is to the left or negative.

In words, *the combination of a positive and a negative number is another number the size of which is the difference of the two numbers, and the sign of which is the sign of the greater of the two numbers.*

Digitized by Google

A further thing to notice is that it does not matter which of the two journeys is made first. The result will be the same. If this is not immediately obvious it can be made

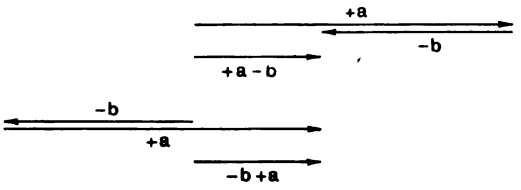

Fig. 5.

a fact of experience by actually drawing out and measuring several such cases, as in Fig. 5. This conclusion can be stated

$$+a-b=-b+a.$$

Further, in the case of several journeys such as

$$+a-b-c+d-e+f, \text{ etc.},$$

any arrangement of these can be got by changing round two at a time, and since changing round two at a time does not affect the result, any arrangement of these journeys will have the same result. Finally, as these journey units satisfy the fundamental rule about addition (being things all of the same kind) the above statement may be completely generalised as follows :—

The result of adding any number of positive and negative numbers is not affected by the order in which the various positive and negative numbers are added.

First, therefore, the journey will be arranged in the form

$$+a+d+f-b-c-e.$$

Now all the positive journeys or journeys to the right can be combined together and considered as the single journey to the right, $+(a+d+f)$.

Similarly all the negative journeys or journeys to the left can be combined together. The result will be a single negative journey the length of which is equal to that of all the separate journeys put together, *i.e.*, the sum of the separate negative journeys. This single negative journey is therefore

$$-(b+c+e).$$

The total journey can now be expressed as the combination of these groups, *i.e.*,

$$\begin{aligned} &+a-b-c+d-e+f \\ &\quad =+a+d+f-b-c-e \\ &\quad =(a+d+f)-(b+c+e) \end{aligned}$$

and the rule of sign can be applied to the two separate groups. Thus if $(a+d+f)$ is greater than $(b+c+e)$ the sign of the total combination will be positive, and *vice versa.*

(B.I,) *Brackets and the Negative Sign.*

It was shown in the preceding section that the three negative journeys $-b$, $-c$, and $-e$ could be combined together into the single negative journey represented by $-(b+c+e)$ and since $(b+c+e)$ is the same as $(+b+c+e)$, then this grouping process is represented by

$$-b-c-e=-(+b+c+e)$$

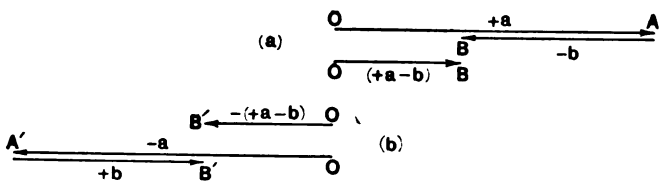

Fig. 6.

This is known as the Law of Commutation (*cf.* Section 3 (a)).

How is the rule of signs to be applied to a rather complicated group of journeys (or numbers) like the one just considered ? The easiest way is to take all the positive journeys together and all the negative journeys together, just as in making up accounts one adds up all the credits together and then all the debits together.

and since there is no reason why this process should not be reversed

$$-(+b+c+e)=-b-c-e.$$

This shows that if there is a negative sign in front of a bracketed expression and the brackets are taken away then all the positive signs inside the brackets must be changed to negative signs.

Consider now the combination of journeys $+a-b$ shown in Fig. 6 (a). This means the

Digitized by Google

journey O to A and then A to B. Considered as a single journey it is the journey $(+a-b)$, *i.e.*, the journey O to B. Applying the negative sign to this journey reverses its direction and makes it the journey O to B' shown in Fig. 6(b), *i.e.*,

$$OB=(+a-b)$$
$$OB'=-(+a-b).$$

If now it is wished to dissociate the journey OB' into two parts one of which shall be of length a and the other of length b, there is only one way to do it. The journey a, the longer of the two, must be made to the left and the journey b to the right. That is,

$$OB'=-a+b.$$

This shows that

$$-(+a-b)=-a+b.$$

The same argument can be applied if a is less than b.

If the bracket contains a number of positive and negative numbers these can be grouped together in the manner shown in the preceding section. For instance,

$$a-b-c+d+e-f=a+d+e-b-c-f$$
$$=(a+d+e)-(b+c+f) \text{ by Section 3 (d).}$$

Now representing the group $(a+d+e)$ by the single number or journey p and the group $(b+c+f)$ by the single number or journey q, then

$$a-b-c+d+e-f=p-q$$

and

$$-(a-b-c+d+e-f)=-(p-q)$$
$$=-p+q \text{ as already shown.}$$
$$=-(a+d+e)+(b+c+f)$$
$$=-a-d-e+b+c+f$$
$$=-a+b+c-d-e+f$$

The general rule should now be clear. *If a negative sign is in front of a bracketed group of numbers and the brackets are taken away, then all the positive signs inside the brackets must be changed into negative signs, and all the negative signs must be changed into positive signs.*

It should already be obvious that if there is a plus sign in front of the brackets, then the brackets can be taken away without altering the signs inside the brackets at all. This only expresses the idea that a combination of positive and negative numbers can be considered as a single number, *i.e.*, for instance,

$$a-b-c+d=(a-b-c+d)$$
$$=+(a-b-c+d)$$

or reversing the process,

$$+(a-b-c+d)=a-b-c+d.$$

(c) *Repeated Combination.*

Just as a number of parcels can be wrapped up into a larger parcel, and a number of these larger parcels can be wrapped up together into a still larger parcel, so a number of combined numbers can be grouped together into a combination of combined numbers, and these again can be further grouped together indefinitely. For distinctness, each degree of combining or wrapping up is shown by a different sort of bracket. To take an example—combining the numbers

$$(a-b)$$

and

$$-(c+d)$$

gives

$$[(a-b)-(c+d)]$$

Combining this with a similarly combined negative number

$$-[(e+f)+(g-h)]$$

gives

$$\{[(a-b)-(c+d)]-[(e+f)+(g-h)]\}$$

and combining this with another simple number k

$$k+\{[(a-b)-(c+d)]-[(e+f)+(g-h)]\}$$

In carrying out the reverse process, one would, in dealing with a parcel of parcels, remove one wrapper at a time, starting with the outside one. Dealing with the above combination of combinations in the same way, and remembering that every sub-combination is to be regarded as a separate single thing, the process becomes

$$k+\{[(a-b)-(c+d)]-[(e+f)+(g-h)]\}$$
$$=k+[(a-b)-(c+d)]-](e+f)+(g-h)]$$
$$=k+(a-b)-(c+d)-(e+f)-(g-h)$$
$$=k+a-b-c-d-e-f-g+h$$

which reveals the fact that k, a, and h are the only positive numbers in the whole group, a point which was not at all obvious in the combined form.

Actually the parcel analogy is not quite complete, because in a case like the one above there is nothing to prevent one from unwrapping some of the inside parcels first without disturbing the outer wrapping.

Digitized by Google

Thus

$$k+\{[(a-b)-(c+d)]-[(e+f)+g-h)]\}$$
$$=k+\{[a-b-c-d]-[e+f+g-h]\}$$

One can even rearrange the separate numbers into different inside parcels again thus

$$k+\{[(a-d)-(c+b)]-[(e-h)+(g+f)]\}$$

Another inside rearrangement is

$$k+\{[a-(b+c+d)]-[(e+f+g)-h]\}$$

or

$$k+\{[a-(b+c+d)]+[h-(e+f+g)]\}$$

which exhibits the number in a more symmetrical form.

The following is left as a simple exercise for the reader. Show that

$$[(a+b+c)-\{(a-b)-[(c-b)+(a-c)]\}$$
$$-[(a+b-c)+(a+b+c)+(c-a-b)]=0$$

(C.1.) *Extended Meaning of the Letter Symbols.*

Up to this point it has been assumed that the letter symbols used in algebra represent positive whole numbers, and negative numbers have been represented by prefixing the negative sign to the letter symbol. This was done in order that the laws about association and commutation and the rules relating to the negative sign might be explained as clearly as possible. But now that these things have been explained, there is no reason why the meaning of a letter symbol should be restricted in this way,* and in practice it would be rather inconvenient. In later applications it will be found that the number represented by a given symbol may vary over very wide ranges in accordance with the conditions of the problem, and may be negative for one set of conditions and positive for another. It will be found on examination that the rules developed for the combining of the numbers a, b, c, d, etc., in accordance with the signs written in front of them, will be equally valid whether the actual numbers represented by the letters are taken as positive or negative. For example, on the understanding that the letters mean positive numbers, it was shown that

$$a-(b-c)=a-b+c$$

and this can be confirmed by putting

$$a=1$$
$$b=2$$
$$c=3$$

Then $(b-c)=2-3=-1$

and $a-(b-c)=1--1=1+1=2.$

Also $a-b+c=1-2+3=2$

which confirms the statement.

Now suppose instead that

$$a=1$$
$$b=2$$
$$c=-3$$

Then $(b-c)=2--3=2+3=5$

and $a-(b-c)=1-5=-4$

Also $a-b+c=1-2+-3=1-2-3=-4$

and again the statement is confirmed. As an example of a case in which a single symbol can assume a wide range of values, positive or negative, take

$$a=b-c$$

where b can be any number from 0 to 100 and where c can be the same or any other number from 0 to 100. Here a can be any number from -100 to $+100$.

On the basis of this wider interpretation of the letter symbols, it will be necessary to reconsider the meaning of the "greater than" and "less than" signs. (Section 3 (B), i, ii, iii, iv.) When a and b are positive numbers, say $a=1{,}000$ and $b=1$, then the statement $a>b$ is quite unambiguous. But suppose $a=-1{,}000$ and $b=1$. What is meant by "greater than" in a case like this? It is, of course, only a matter of definition and agreement, and it is generally agreed that the "greater than" sign shall mean "more positive than" so that now $b>a$ for the given values. Remember that the wealth of a man who has one pound is greater than that of a man who has a debt of a thousand pounds. That is the sense in which the "greater than" sign is used algebraically. The other signs are similarly interpreted and need not be considered in detail. If in any case it is desired to indicate the relation between the actual numerical magnitudes of the two numbers without regard to sign, then this must be specifically stated, *e.g.*, "$a>b$ numerically." Some writers use for the same purpose the notation

$$|a|>|b|$$

i.e., the symbol is enclosed between strokes to indicate that its numerical magnitude only is being considered.

For the present, therefore, the letter

* According to Chrystal this important fact was not generally realised until about 1640.

Digitized by Google

symbols can be taken to mean positive or negative whole numbers. Further extensions of their possible meaning will come in their own time.

(C.2.) *A Physical Example of the Combination of Positive and Negative Numbers.*

The general meaning of algebraic addition will perhaps be made clearer by a physical example. A man starts from a point 100 feet above sea level and goes for a long walk up hill and down dale, eventually coming back to where he started from. Dividing up his walk into parts where he is either keeping on the same level, going up, or going down, let c_1, c_2, c_3, c_4, etc., completely represent the separate changes of level that he encounters. Then since his total change of level is nothing from start to finish

$$c_1+c_2+c_3+c_4+c_5+\text{etc.}=0.$$

It is clear that some of these numbers must be positive and some negative, and this is what is implied by the words "completely represent." If an ascent is represented by a positive number, then the algebraic statement is sound if a descent is represented by a negative number. If a_1, a_2, a_3, etc., and d_1, d_2, d_3, etc., be *positive* numbers which represent the actual amounts of the various ascents and descents, then the statement can be put in the form

$$a_1+a_2+a_3+\text{etc.}-d_1-d_2-d_3-\text{etc.}=0.$$

It is just a matter of definition and agreement which form is used. If the first, which is in a sense more general, then it must be remembered that when actual numbers are put in place of the letters, the numbers must have their proper sign attached to them, according to whether they stand for uphill or downhill journeys.

The discovery of a scientific law is often, perhaps always, the recognition of an analogy, or an essential similarity between two sets of ideas. If in the above example the idea of potential difference is substituted for "change of level" and the journey round and back to the starting point is thought of as going round a closed circuit of electric conductors, then readers will recognise in the example a statement of Kirchoff's Law about the sum of the potential differences in a closed circuit, an ascent representing a forward electro-motive force, and a descent representing a fall of potential or a back electro-motive force.

(C.3.) *Understanding or "Rule of Thumb"?*

Before going on to the last of the fundamental rules of arithmetic, *i.e.*, those concerned with multiplication and division, it will do no harm to take a short rest and a look round.

So far the ascent has not been very difficult, though the writer will not flatter himself that it has been really easy. There is no system of "mathematics without tears." As the learned Greek replied to the king many centuries ago, "There is no royal road."

This raises a question which some readers may already have asked themselves. Assuming that one learns the rules and abides by them, how far is it necessary to really understand them? (The infinitive is deliberately split, for emphasis.)

Let us think of a housemaid using a vacuum cleaner. She knows that if this thing is put into that and this other thing is pressed down until it clicks, a humming noise follows and the mouth end of the long stick will now pick up dust from the carpet. She does not know what makes the humming noise, and even if she did she would not know why the motor goes round; nevertheless, she can still use the long stick to pick up dust from the carpet. True enough, but think of the suppressed fear that persists even when familiarity has dulled the fine edge of her sensibilities, and think also of her helplessness when something goes wrong.

There are of course two sides to the question. It is not suggested that only qualified engineer maids should be allowed to use vacuum cleaners. Translating the analogy, the reader need not wait until he completely understands the rules before making use of them. (If he does he will wait for ever. Does the engineer really know why the motor goes round?) But there are several reasons why he should try to understand them as fully as possible, understanding being taken to mean the reduction of a mystery to its lowest terms.

In the first place, understanding deepens the original impression and so gives the memory a firmer foothold. Again, understanding gives confidence, real confidence, and not merely the absence of fear that follows on familiarity. Finally, using rules without understanding them is not treating the mind with proper respect. It is asking

Digitized by Google

it to be satisfied with the position and capabilities of a tram driver, without aspiring to those of the engineer who knows how to lay down fresh tracks and design better machines to run on them.

There is one other thing to be said about this question of understanding the rules, and this introduces what has always seemed to the writer to be one of the most fascinating aspects of mathematics. Borrowing a phrase from the racing stables, the Rules of Mathematics are by Intuition out of Experience. In other words, they result from the mating of certain inborn habits of mind or "modes of perception" with sensory impressions of the outside world. Now many cases will arise where adherence to these rules will take the mind into a region where understanding breaks down, in the sense that no kind of sensory impressions can be found to correspond to the processes of thought. Nevertheless, it will be found that the rules remain valid in passing through this region of darkness, for the processes can be carried still further until they re-emerge into daylight, so to speak, and sensory impressions can again be found to correspond to them. To take an example, which the more advanced readers at least will be able to follow, it is possible by blindly following the rules to calculate where the tangents to a circle from a point inside the circle will make contact with the circle. Such tangents cannot be drawn in the ordinary sense of the word, and the points of contact will be "imaginary." However, continuing the process, the line that passes through these points can also be calculated, still by blindly following the rules, and it will be found that this is a real line, possessing certain useful properties with respect to the point inside the circle. It is difficult to realise the full implications of this process. It suggests that by means of its intuitions the mind can transcend the limitations of its environment. It is only in this sense that the mind should be allowed to be satisfied in using rules without understanding them.

(*To be continued.*)

Wire Anode Resistances.

Practical Details of Construction. [R383

THE writer has recently had occasion to construct a number of non-inductive resistances of low self-capacity and about 50,000 ohms in magnitude suitable for use in the anode or grid circuit of a receiving valve. Since the method of construction adopted has proved very simple to carry out and gives a resistance of good electrical properties, it has been thought worth while to publish the following brief description.

First the requisite number of discs are cut from $\frac{1}{16}$ in. ebonite sheet, the dimensions being as shown in the figure. A number of these can be conveniently turned up together from square or octagonal pieces held together between two 2 B.A. nuts on a short length of 2 B.A. studding as a spindle. All the discs are then drilled with just clearing 6 B.A. holes and on half of the larger discs the holes are countersunk on one side so as to bring the head of a 6 B.A. countersunk screw just flush with the surface of the ebonite. It is preferable to use a jig for the drilling and a small register mark can be made on each disc in case the jig is not quite accurate. The larger discs are then clamped together in a vice (care being taken to register the holes) and a narrow saw-cut is put in radially as shown in the diagram.

The formers can now be assembled by putting 6 B.A. counter-sunk brass screws through the clearing holes, cutting them off short and just burring the ends with a light hammer.

Digitized by Google

Apart from the present application, formers made as above are very suitable for the construction of radio-frequency transformers or chokes of low self-capacity.

For the winding of the resistances No. 47 gauge D.S.C. Eureka wire should be used. This can be obtained from the London Electric Wire Company and is quite easy to handle, being surprisingly robust. It has a resistance of about 200 ohms per metre.

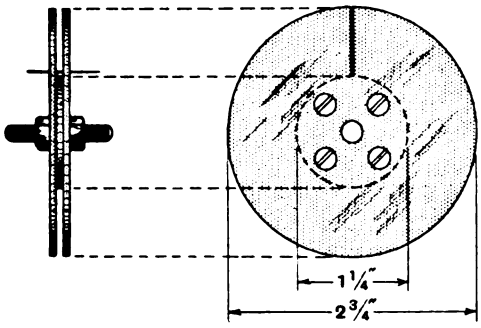

Details of bobbin construction.

One end of the winding is soldered on to the head of one of the 6 B.A. fixing screws and the disc is then mounted in the lathe on a length of 2 B.A. studding as spindle. Fifty turns are wound on in a forward direction, then a fine needle is put through the slots across the winding, as can be seen in the figure, and fifty more turns put on in the reverse direction, the needle serving to hold the loop in place. By the time the second fifty turns are on, the loop due to the reverse of direction is securely locked in place and the needle can be withdrawn, re-inserted in the slots on top of the winding and fifty more forward turns put on. This process is continued until the desired resistance is obtained. The actual number of turns will, of course, depend on the exact thickness of the ebonite sheet and to some extent on the tightness of the winding. Probably about 1,600 turns will be required for a resistance of 50,000 ohms, leaving about ¼ in. clear space inside the former. The winding should not be put on very tightly.

If a revolution counter is not available a thin thread carrying a little weight can be wound and unwound on the 2 B.A. studding spindle on which the bobbin is mounted.

The end of the winding is taken out through the slot and can be soldered on to the head of another of the 6 B.A. fixing screws. Thin copper leads can be soldered to the ends of the screws to the heads of which the winding has been connected.

For the measurement of the electrical constants of the finished resistances the writer is indebted to the courtesy of Mr. L. F. Hartshorn, of the National Physical Laboratory. The self-capacity was found to be between 6 and 7$\mu\mu$F for resistances of just over 50,000 ohms. Such units will therefore be very satisfactory either for low-frequency amplification or for high-frequency amplification on the longer wavelengths.

Resistances of about 50,000 ohms were required for the writer's particular purpose, but anything up to about 100,000 ohms can be carried in these formers. F. M. C.

Digitized by Google

Long-Distance Work.

By Hugh N. Ryan (5BV). **[R545.009.2**

AT the time of writing, on account of industrial troubles now happily terminated, amateur radio work, in common with much other work, is somewhat curtailed, and reports of even such work as is in progress are not obtainable as readily as usual. However, quite a number of reports are to hand, and these, together with observations "on the air" itself, will form this month's article, which will necessarily be a short one.

DX conditions generally are about the same as those prevailing at the time of last month's report. Work with the U.S., though generally easy, is somewhat spasmodic, and nights when their stations are not to be heard are fairly frequent. Work with Australia continues to be easier than that with New Zealand, while South America, and particularly Brazil, still provides the easiest field for DX.

2SZ has not been doing a great deal of actual DX work recently, but has been chiefly occupied with experiments on aerial systems, and further work on quartz oscillators.

5BV is now in fairly regular, though not very frequent, operation again on 45 metres, with rather less power than that previously used. Like 5LF, he has not caught the prevailing "phone fever," which seems to have bitten most of the higher-powered stations.

6VP is still confining himself to 10 watts input, and has recently had a run of bad luck with valves, but has nevertheless got through to New Zealand.

Messrs. Studley, of Harrow, who have for a long time been well known for their work in DX reception, have now a transmitting station, with the call 5TD. At present they are using very low power, but have a useful range of over a thousand miles.

6CI, of Coventry, has been continuing the tests on very low power, which I have previously reported, and his results suggest that the present low-power record-holders (whose name, in my experience, is Legion) must look to their laurels. 6CI's power varies now between 0.5 and 0.75 watt, and his signals are regularly heard in all parts of Europe up to 1,000 miles. These results compare very favourably with those isolated cases of freak reception which are so often claimed as records.

2KK continues to work U.S.A. regularly with 10 watts and a Hertz.

5KO, though limited to a power which certainly does not recall the days when he was one of our very "biggest noises" on the air, is obtaining results which in their turn make the old high-power stations' work seem small. He has worked the Antipodes with a maximum of 30 watts from violently fluctuating mains.

There would appear to be no country in which 2CC has not been heard, and very few with which he has not worked. He puts out a very strong and pleasant note, whose only fault is an occasional instability in QRH, which would be worth curing.

Two Scottish stations, 5YG and 2VX, have worked Brazilian 6QA with 9 and 12 watts respectively. (6QA, by the way, is the new call of bz7AA.)

Belgian J2 and W2 are now working under the single call 2SM, and should soon be heard with a crystal-controlled set which, to judge from its description, should be very good indeed.

Reports for next month should be sent as early as possible, marked "DX work" and addressed care of the Editor.

Digitized by Google

Abstracts and References.

Compiled by the Radio Research Board and reproduced by arrangement with the Department of Scientific and Industrial Research.

R000.—WIRELESS IN GENERAL.

R008.—DIGESTS OF UNITED STATES PATENTS RELATING TO RADIO TELEGRAPHY AND TELEPHONY. Issued 5th January, 1926, to 2nd March, 1926.—J. Brady. (*Proc. I.R.E.*, April, 1926, pp. 263—270.)

R010.—RUSSIA—SHORT WAVE RESEARCH. (*Electrical Review*, 9th April, 1926, p. 585.)

For some time past experiments with short waves have been in progress at the Russian Soviet Government Laboratory at Nishni-Novgorod, and it is reported that by the use of a 1,520-watt transmitter, devised in the laboratory, messages have been successfully transmitted to Chile and Porto Rico on wavelengths of 83, 102 and 104 metres. The object of the experiments is to provide a practicable form of communication with remote parts of Soviet Russia.

R030.—A QUESTION OF NOMENCLATURE.—W. Williams. (*Wireless World*, 17th March, 1926, p. 430.)

A letter drawing attention to an error of nomenclature in Dr. Smith Rose's article on "Polarisation of Wireless Waves" (*Wireless World*, 16th December, 1925, p. 159), where the plane of polarisation of a plane polarised beam is made to coincide with the plane of the electric vector, whilst hitherto, throughout the field of optics and electromagnetism, it has been taken to coincide with that of the magnetic vector.

Dr. Smith-Rose, in reply, admits his error according to the definition of the term "plane of polarisation" as derived from the history of physical optics, but points out that his use of the term is customary in the wireless profession. In anticipation of reaching some international agreement on the matter, as suggested by Mr. Williams, he desires to put forward two proposals for discussion :—

1. That the plane of polarisation should be referred to the electric instead of the magnetic vector; and
2. That the definition of the plane of polarisation should be altered to be the plane containing the electric vector.

Reasons are given justifying these changes.

The question is also discussed in *E.W. & W.E.* for April, 1926, pp. 201—202.

R060.—CO-OPERATIVE RESEARCH IN THE UNITED STATES. (Circular of the *Bureau of Standards*, No. 296.)

Details are given of an admirably conceived plan, adopted by the Bureau, to provide a steady stream of trained research workers, familiar with the methods and resources of the Bureau, supplying the needs both of the Bureau and of industry.

R091.—BEVOR DER DREHKONDENSATOR KAM (Before the rotary condenser came).—O. Scheller. (*Zeitschrift f. Hochfrequenz.*, 27, 3, pp. 63—66.)

The technique of practical measurement and its significance in the first years of wireless telegraphy.

R100.—GENERAL PRINCIPLES AND THEORY.

R112.—DISTRIBUTION OF WIRELESS WAVES.—Dr. Smith-Rose. (*Wireless World*, 17th March, 1926, pp. 401—405.)

A popular article showing the dependence of reception upon ground conditions, and how blind spots in broadcast transmission are produced.

R113.—UBER DIE FORTPFLANZUNG ELEKTROMAGNETISCHEN WELLEN (Concerning the propagation of electromagnetic waves).—G. Elias. (*Zeitschr. f. Hochfrequenz.*, 27, 3, pp. 66—73.)

A theory is worked out to account for the ionisation of the upper atmosphere. It supposes a certain permanent ionisation produced by rays emitted by the sun, in addition to a temporary ionisation by day due to solar wave radiation. Simplifying these assumptions the number of ions is calculated. From the calculation there results a height of about 80 km. for the permanently ionised layer and 50—60 km. for the daytime layer—the former being far more sharply defined than the latter.

Further, the electrical constants of the upper atmosphere are calculated and represented graphically.

The behaviour of the different wavelengths, by day as well as by night, is explained on the basis of these calculations, also several of the facts found experimentally can be accounted for.

R113.—DIAGRAMMES DES CHAMPS ELECTRIQUES MESURÉS À MEUDON PENDANT LE TROISIÈME TRIMESTRE 1925 (Graphs of the electric fields measured at Meudon during the third quarter of 1925). (*L'Onde Electrique*, April, 1926, pp. 186—187.)

Graphs are shown of the electric field, in microvolts per metre, of Bordeaux, Nantes, Rocky Point, Rome and Leafield, measured at Meudon by the method described in No. 1 of *L'Onde Electrique*, January, 1922.

R113.1.—THE MYSTERY OF FADING.—Dr. Hall. (*E.W. & W.E.*, April, 1926, pp. 211—214.)

R113.4.—THE POLARIZATION OF RADIO WAVES.—G. Pickard. (*Proc. I.R.E.*, April, 1926, pp. 205—212.)

Prior measurements of wave polarisation made at the lower transmission frequencies have uniformly

Digitized by Google

shown vertical electric force at all distances from the transmitter. The present work extends such measurements to the higher frequencies, where it is found that the electric force at any considerable distance from the transmitter is no longer vertical, but predominantly horizontal. Comparative measurements of radiation polarised alternately horizontally and vertically are also made, which indicate that the ratio of horizontal to vertical electric field depend only upon the frequency, distance and time of day, and are substantially independent of the plane of polarisation at the transmitter.

R113.3.—NEW METHOD PERTAINING TO THE RECEPTION OF INTERFERENCE IN THE RECEPTION OF WIRELESS TELEGRAPHY AND TELEPHONY.—H. de Bellescize. (*Proc.I.R.E.*, April, 1926, pp. 249—262.)

The usefulness of directional reception and resonant circuit selectivity in reducing the effect of atmospheric disturbances is discussed.

Assuming that sinusoidal forces co-exist in a system with much larger impulses, it is shown that the sinusoidal forces will not pass through systems having internal frictional losses under certain definite conditions. The analogy between mechanical frictional systems and magnetic hysteretic systems is utilised in devising differential circuit arrangements whereby strong impulses, passing through two opposing circuits of controllable hysteretic damping, are nltimately balanced out, whereas smaller sinusoidal currents are delivered at the output of the system. The application to radio reception is described in detail.

R113.4.—OZONE AND THE UPPER ATMOSPHERE.—Prof. Armstrong. (*Nature*, 27th March, 1926, p. 452.)

A letter, referring to the discussion on the electrical state of the upper atmosphere at the Royal Society on 4th March, suggesting a way in which the ozone present might serve as an "accumulator."

R113.4.—THE ELECTRICAL STATE OF THE UPPER ATMOSPHERE. (*Nature*, 27th March, 1926, pp. 454—456.)

A report of the contributions by Sir Henry Jackson, Prof. Chapman and Dr. Eccles to the discussion on the upper atmosphere at the Royal Society on 4th March.

R113.4.—SOME RECENT ADVANCES IN ATMOSPHERIC PHYSICS.—Prof. S. Chapman. (*Nature*, 10th April, 1926, p. 537.)

Abstract of lecture given to Royal Meteorological Society on 17th March.

R113.5.—PERTURBATION MAGNÉTIQUE DU 5 MARS 1926 ET PERTURBATIONS DES PREMIERS MOIS DE L'ANNÉE (Magnetic disturbance of 5th March, 1926, and the disturbances of the first months of the year). — H. Deslandres. (*Comptes Rendus*, 22nd March, 1926, pp. 733—735.)

R113.6.—POLARISATION OF RADIATION SCATTERED BY AN ELECTRONIC SYSTEM TO A MAGNETIC FIELD.—G. Breit. (*Journ. Optical Soc. of America* and *R.S.I.*, March, 1926, pp. 195—205.)

R113.6.—THE REFRACTIVE INDEX OF GASES AND VAPOURS IN A MAGNETIC FIELD.—R. Fraser. (*Philosophical Mag.*, April, 1926, pp. 885—890.)

R113.8.—SUR L'ORAGE MAGNÉTIQUE DU 26 JANVIER, 1926 (The Magnetic Storm of 26th January, 1926).—C. Maurain and L. Eblé. (*Comptes Rendus*, 1st February, 1926, p. 328.)

Account of the variations of the magnetic elements recorded at Val-Joyeux Observatory on 26th January.

R.113.8.—ATMOSPHERIC OZONE AND TERRESTRIAL MAGNETISM.—Dr. Chree. (*Proc. Roy. Soc.*. April, 1926, pp. 693—699.)

R113.8.—MEASUREMENTS OF THE AMOUNT OF OZONE IN THE EARTH'S ATMOSPHERE AND ITS RELATION TO OTHER GEOPHYSICAL CONDITIONS.—Dr. Dobson and Dr. Harrison. (*Proc. Roy. Soc.*, April, 1926, pp. 660—693.)

R114.—THE DIRECTIONAL RECORDING OF ATMOSPHERICS.—R. A. Watson Watt. (*E.W.&W.E.*, April, 1926, pp. 234—238.)

R114.—LIGHTNING.—Dr. Dorsey. (*Journ. Franklin Inst.*, April, 1926, pp. 485—496.)

As here pictured, a lightning stroke starts with the initiation of a powerful electronic dart, and has a definite direction, that of the advance of the dart, and involves three distinct phenomena :—

1. Flying electrons ionise the air and produce certain characteristic effects where they strike.
2. Laggard electrons combine with the positive residues, giving rise to the flash.
3. A current results from the migration of the ions under the action of the field.

This current may be very great, but it is merely an incident of the flight of the electronic dart, is subsequent to that, and, relatively to the dart, is exceedingly sluggish. Whatever its direction, the stroke is not a result of the cloud discharging to earth ; the charge of the cloud does not pour into and along the flash, although ultimately the cloud does become partially discharged by the electrons or ions which have been freed by the dart. This discharge may involve relatively little motion of the charged particles initially resident in the cloud.

R120.—SPACE CHARACTERISTICS OF ANTENNÆ.—W. Murphy. (*Journ. Franklin Institute*, April, 1926, pp. 411—429.)

A study is made of the actual radiated fields in space at unit distance by resolving the true fields into three imaginary components: A vertical component, a horizontal component in the directional plane of wave propagation, and a horizontal component perpendicular to this plane of propagation. This is done for special cases, such as for

Digitized by Google

vertical and horizontal loops and antennæ, and from these cases general formulæ are evolved for inclined loops and antennæ. In addition to this, the component fields due to loops and antennae are added and resultant formulæ derived therefrom. The method of expressing the angle of the fields with respect to certain axes of reference, in other words, the polarisation of the field at any point in space is discussed, and formulæ derived for certain specific antennæ.

R127.—PRAKTISCHE BERECHNUNGSMETHODEN VON ANTENNENKAPAZITÄTEN (Practical methods of calculating antenna capacity).—J. Pusch. (*Zeitschr. f. Hochfrequenz.*, 27, 2, pp. 47—50).

The capacity of all forms of antenna, not too complicated in their composition, can be calculated to a good degree of accuracy by the method given by Howe (*Wireless World*, Dec., 1914, Jan., 1915, Sept., 1918, etc.). For many cases in practice, however, such a calculation is too intricate and would take too long. Accordingly, formulæ and methods of calculation are given here, making it possible to reckon antenna capacity simply and rapidly, with sufficient accuracy for many purposes.

The article is arranged in five sections :—

1. Calculation from the capacity of one wire and the number of wires.
2. Calculation from the antenna surface.
3. Calculation from the apparent surface of the antenna.
4. Increasing the capacity due to use of iron masts.
5. Choice of the number of wires.

R130.—EXPERIMENTAL STUDY OF INPUT ADMITTANCE OF TRIODE VALVE AT RADIO FREQUENCY AND THE METHOD OF RADIO - FREQUENCY VALVE CONSTANTS MEASUREMENT.—Yasusi Watanabe. (*Journ. Inst. Elect. Engineers of Japan*, March, 1926, pp. 299—310.)

This method, which claims to be new, consists in determining the variation of input admittance, which depends upon the valve constants.

In a previous paper by the author, *Input Admittance of Triode Valve*, the conclusion is drawn that the circle diagram of the input admittance depends upon the circuital constants as well as the valve constants. Consequently the valve constants can be determined from any measured results corresponding to the circle diagram. Some examples of determinations made at a frequency of 100,000 cycles per second are given, and it is concluded that the valve constants are literally constant and independent of the frequency, within the range of the author's experiments.

Some experimental results are also given with respect to the input admittance at radio-frequency.

A simple bridge method of determining the constants at radio-frequency was treated in the journal *Denki-Hyoron*, January, 1926.

R132.—AMPLIFIER PERFORMANCES.—H. Thomas. (*Electrician*, 9th April, 1926, pp. 410, 411 and 415.)

Abstract of a paper read before the Institution of Electrical Engineers.

A method of determining voltage amplification is given in detail and the effect of the amplifier on input circuits is analysed. Among the conclusions drawn from the experiments described are :—

1. The effect of increasing output is to modify the wave-form seriously. In general, the harmonics increase in magnitude far more rapidly than the fundamental.
2. As the frequency is lowered, the distortion becomes much more pronounced.
3. The effect of negative grid bias is to reduce the magnitude of the second and third harmonics and to introduce small harmonics of a higher order.
4. The form factor remains sensibly constant under most conditions.

R132.—UBER DIE KONSTRUKTION VON ARBEITSKENNLINIEN BEI VERSTÄRKERN MIT WIDERSTANDSKOPPLUNG (The construction of working characteristics in the case of Amplifiers with Resistance coupling).—M. von Ardenne. (*Zeitschrift f. Hochfrequenz.*, 27, 2, pp. 50—51.)

In supplement to the paper on resistance amplifiers (M. von Ardenne and H. Heinert, *Zeitschrift f. Hochfrequenz.*, 26, 52, 1925) data are given for the construction of working characteristics from a characteristic with constant anode voltage.

R133.—OSCILLATION WITHOUT REACTION.—Dr. Kröncke. (*Wireless World*, 24th March, 1926, pp. 467—468.)

Account of an effect produced by the emission of secondary electrons in the valve.

R135.—LE RADIOMODULATEUR BIGRILLE (The four-electrode valve as a modulator).—J. de Mare. (*L'Onde Electrique*, April, 1926 pp. 150—180.)

Lecture given before the Société des Amis de la T.S.F. on 12th November, 1925.

After considering generally reception by change of frequency, the characteristics of the four-electrode valve and its employment to produce a frequency changer by modulation are described.

Following the lecture there was a long discussion in which MM. Lévy, Barthélemy, and de Bellescize took part.

M. Lévy considered that the four-electrode modulator contains no new principle and the frequency change effected is brought about in exactly the same way as in the superheterodyne. He observed that this circuit arrangement has already been described some time ago—in June, 1924—in *E.W. & W.E.*, by M. Williams, and that this latter gave it the name of superheterodyne.

M. Barthélemy, on the contrary, is of the opinion that an essential difference exists between the working of the four-electrode valve and that of the superheterodyne ; the second grid should play a modulating part very different from that of detection which, according to him, would be one of the characteristics of the superheterodyne.

Digitized by Google

R135.009.—Die gittergleichstrom-Modulation des Selbstemgten Rohrensenders (Grid current modulation of the self-excited valve transmitter).—G. Lubszynski. (*Zeitschr. f. Hochfrequenz.*, 27, 2, pp. 33—46.)

A detailed description of experimental investigations carried out in the Telefunken firm's physical laboratory during 1924.

The great number of ways of modulating the oscillations of a valve transmitter can be divided into two principal groups—those in which the high-frequency is modulated before amplification (at the grid), and those where modulation takes place after amplification (at the anode). Since the tendency always is towards controlling the transmitter with the least possible energy, grid methods have claimed increasing attention. It has been found, however, that when the low frequency is brought through a transformer directly to the grid of the transmitting valve, the oscillations completely break down as soon as the low frequency control exceeds a certain value (this phenomenon is described by Manz and Zenneck in the *Jahrbuck*, 19, p. 262, 1922). This instability of the oscillation conditions, caused by the oscillations ceasing below a certain amplitude, has been overcome by a combination of resistance and capacity in the grid circuit. Here the actual modulation is produced by altering the direct current grid resistance—which is then replaced by a valve. The phenomena occurring in this circuit are investigated in this article, the results being represented by means of curves.

R138.—Uber die Bestimmung der Glühfadentemperatur in Elektronenröhren (The determination of the temperature of the incandescent filament in valves).—H. G. Möller and F. Detels. (*Zeitschrift f. Hochfrequenz.*, 27, 3, pp. 74—81.)

Four methods for determining the temperature are available :—

1. By optical means, using a pyrometer or by photograph.
2. By means of a thermo-couple.
3. Finding the resistance increase of the filament.
4. A new method consisting in measuring the Maxwellian distribution of velocity of the electrons leaving the filament.

So long as Maxwell's law of distribution can be taken to hold good for electrons close to the filament surface, this method must yield exact values. In this article the sources of error of this new method are discussed and the working conditions deduced for obtaining reliable temperature determinations.

R140.—Entretien d'une Oscillation Libre non Sinusoïdale par Résonance de l'un de ses Harmoniques (Maintenance of a free non-sinusoidal oscillation by resonance with one of its harmonics).—J. Fallon and A. Manduit. (*Comptes Rendus*, 1st February, 1926, pp. 312—313.)

An experiment is described which shows how the transitory voltage across the condenser of a circuit, containing resistance, self-inductance, capacity and alternating supply, when the circuit is closed (due to the free oscillation of the system with pulsation equalling approx. $\frac{1}{\sqrt{LC}}$ and which ordinarily becomes negligible at the end of a certain time determined by the exponential factor) can be wholly maintained if the pulsation of one of its harmonics coincides with that of the source.

It is also shown how the principle can be utilised to obtain a ferromagnetic frequency demultiplier.

R142.3.—Bedingung für Maximale Energieubertragung in Induktiv Gekoppelten Kreisen (The condition for maximum transference of energy in inductively coupled circuits).—J. Kammerloher. (*Zeitschrift f. Hochfrequenz.*, 27th March, 1926, pp. 81—86.)

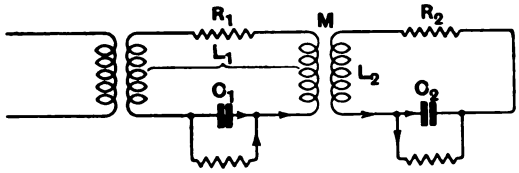

In this article the required condition for maximum transference of energy for the two oscillatory circuits, represented above, tuned to the same frequency, is found to be—

$$M = 1/\omega \sqrt{R_1' . R_2'}$$

where R_1', the resistance of circuit I,

$$= R_1 + \frac{L_1}{\zeta_1 . C_1}$$

and R_2', the resistance of circuit II.,

$$= R_2 + \frac{L_2}{\zeta_2 . C_2}$$

A similar condition also results for the coupling factor x for which the energy of circuit II. becomes a maximum, namely—

$$x = 1/\pi \sqrt{\delta_1' . \delta_2'}$$

where

$$\delta_1' = \left(\frac{R_1}{\omega L_1} + \frac{1}{\omega \zeta_1 C_1}\right)\pi$$

represents the damping decrement of circuit I. and

$$\delta_2' = \left(\frac{R_2}{\omega L_2} + \frac{1}{\omega \zeta_2 C_2}\right)\pi$$

that of circuit II.

The damping resistance in circuit I. always increases under the preceding condition to the double value. For the case when circuit I. is not tuned, the apparent resistance of circuit I. must be substituted for the damping resistance in the equation for M.

R144.—Effective Resistance of Inductance Coils at Radio Frequency. Part I.—S. Butterworth. (*E.W. & W.E.*). April, 1926, pp. 203—210.)

Digitized by Google

R.145.—ON THE ACTION OF PARALLEL PLATE CONDENSERS UNDER EXCEEDINGLY HIGH FREQUENCY.—T. Hoashi. (*Journ. Inst. Elect. Engineers of Japan*, March, 1926, pp. 311—318.)

A mathematical investigation from which the conclusion is drawn that the equivalent capacitance at exceedingly high frequencies is independent of its specific capacitance at low frequencies and inversely proportional to the specific resistance of the condenser plates and the impressed frequency.

For ordinary condensers there is no need to consider such a frequency effect on the capacitance unless the frequency is as high as some hundred million cycles per second.

R145.5.—POWER LOSS IN CONDENSERS.—L. Hartshorn. (*E.W. & W.E.*, April, 1926, pp. 225—233.)

R148.—SCHNELLTELEGRAPHIE MIT STEUERDROSSEL (High-speed telegraphy with choke control). —W. Fischer and L. Pungs. (*Zeitschrift f. Hochfrequenz.*, 27, 2, 1926, pp. 51—54.)

Choke coils magnetised by direct current are frequently used to-day to modulate high-frequency currents. For a high-frequency circuit, a choke coil with an iron core represents a high ohmic resistance, owing to the large hysteresis and eddy current losses, as well as inductive resistance. If,

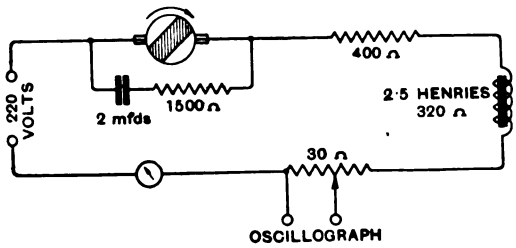

Fig. 2*a*.

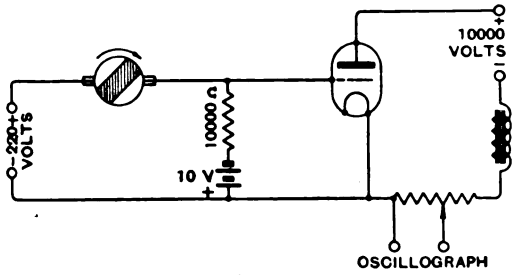

Fig. 2*b*.

by means of an auxiliary winding carrying direct current, the iron core is previously strongly magnetised, so that the induction comes far over the bend of the curve of magnetisation of the iron, no substantial variation of current occurs when a high-frequency magnetisation, whose amplitude remains considerably smaller than the direct current magnetisation, is superimposed. Consequently the inductive resistance of the choke is scarcely larger than would be that of the coil without the iron core, *i.e.*, through previous magnetisation the iron is made magnetically ineffective. At the same time the hysteresis and eddy current losses of the iron drop to a small fraction of the unsaturated values, so that when the coil has been previously magnetised, it no longer represents any considerable loss resistance for the high-frequency circuit. This

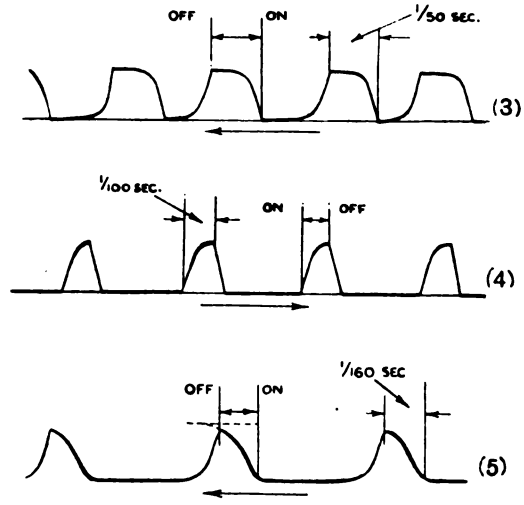

Figs. 3, 4 and 5.

fact is utilised to control the high-frequency current in such a manner that the coil is provided with a modulating winding separate from the high-frequency winding, the direct current supply of this control winding is keyed in the usual way, and thus the resistance of the choke, which is thereby altered, modulates the current in the high-frequency circuit. On closing the key the current does not reach its final value at once ,but only gradually, after an interval of time depending upon the time constant. Similarly when the circuit is broken, the current does not stop immediately, but there is a transient arc. Thus both beginning and end of the signs are distorted, while the form of the signs should be as rectangular as possible if the receiving apparatus is to work properly. To suppress the arc at break, a quenching circuit can be inserted to ensure that the current decreases according to a definite time function, as seen in Fig. 2*a**, where the H.F. circuit and choke winding are omitted for the sake of clearness. This circuit, however, has a time constant large compared with the duration of contact, so that it distorts the rectangular form, as shown by oscillograms obtained in a laboratory experiment which are produced in Figs. 3, 4 and 5.

In Fig. 4 the quenching circuit is omitted. The only way of improving the shape of the wave form is to diminish the time constant (L/R). To decrease L by reducing the number of turns the current must increase beyond an admissible amount

* Note the authors' figure numbers are retained unchanged.

Digitized by Google

to keep the requisite number of ampere-turns. Accordingly, therefore, *R* must be increased. This is attained by means of the circuit arrangement shown in Fig. 2*b*.

Here the grid bias of a valve whose anode circuit contains the modulating winding is keyed. With the key open there is a small negative voltage on the grid completely suppressing the anode current. If now through the key a positive voltage is applied to the grid, an anode current flows whose value is determined by the resistances of the anode circuit, *i.e.*, the internal resistance of the valve, and the ohmic and inductive resistance of the control winding.

From a consideration of the valve characteristics it is shown that the time constant is nearly 20 times smaller than previously, and sufficiently small compared with the duration of the signal for all practical purposes. Figs. 6 and 7 show oscillograms taken with the circuit arrangement 2*b*—and corresponding to a telegraphic speed of 960—1,200 letters per minute.

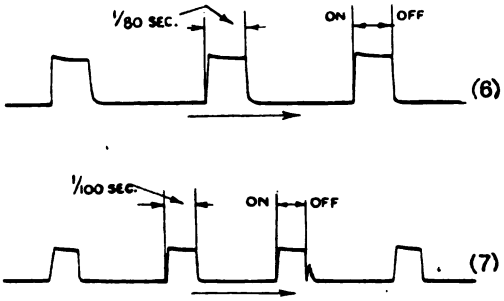

Figs. 6 and 7.

There is a further advantage in this shortening of the period of make and break. The characteristic of the control coil, *i.e.*, the value of the H.F. current plotted as a function of the modulating current, no longer plays any practical part and can have any shape. The modulation of the high-frequency current will still be approximately rectangular, since the time occupied by make and break, in which this dependence of the one current upon the other alone appears, has become imperceptibly short. During the whole time that the sign lasts, the full H.F. current is flowing so that advantage is taken of the entire energy during the sign period.

As regards the practical applications of the device, it is mentioned, for example, that it solves the problem of high-speed telegraphy with the Poulson transmitter without employing a tuning wave, *i.e.*, keying up to the zero value of the aerial current, so that with Siemens' rapid telegraphing a speed of 800 letters can be reached.

R160.—Notes on Wireless Matters.—L. B. Turner. (*Electrician*, 9th April, 1926, pp. 408—409).

A review of the conditions which must obtain within the broadcast receiver for good quality reception, with particular reference to the high-frequency and rectifier circuits.

R160.—Sur' la Détection (Concerning detection).—H. Pélabon. (*L'Onde Electrique*, April, 1926, pp. 141—149.)

The works of Mlle. Collet and M. Cayrel point to the conclusion that, in galena detection, the sulphur situated at the surface of the substance must play the fundamental part. The author effects detection by directly depositing some sulphur upon the metals, and then shows that all metalloids behave like sulphur, and finally that all insulating dielectrics can be employed. He is led to show that detection is produced in reality by the atmosphere and that the non-conducting granules play the double part of keeping constant the distance separating the two conductors and of decoherers.

R200.—MEASUREMENTS AND STANDARDS.

R210.—A Method of Calibrating a Low-frequency Generator with a One-Frequency Source.—S. Harris. (*Proc. I.R.E.*, April, 1926, pp. 213—216.)

Description of a simple method of calibrating an audio-frequency generator, a standard single-frequency source of oscillation being employed. The method makes use of the harmonics of the standard source and of the generator being calibrated. A diagram of the circuit arrangement is shown below.

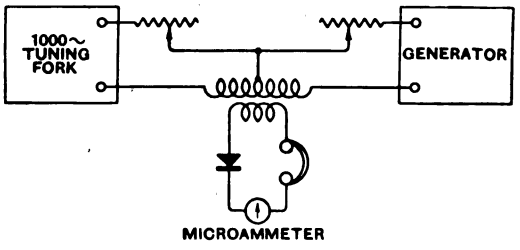

The outputs of the generator and tuning-fork are combined in the transformer indicated, the secondary of which forms part of a circuit indicating the presence of beats.

R223.—The So-called Dielectric Constant.—S. W. Richardson. (*Nature*, 10th April, 1926, p. 515.)

R230.—Inductance Coils Quantitatively Compared.—A. Sowerby. (*E.W. & W.E.*, April, 1926, pp. 220—222.)

R240.—Detection of Small Changes in Resistance, Inductance and Capacity by means of an Oscillating Circuit.—L. Taylor. (*Journ. Optical Soc. of America & R.S.I.*, February, 1926, pp. 149—158.)

Discussion of a device consisting essentially of a Colpitt's oscillating circuit of carefully selected constants.

Digitized by Google

R251.2.—A RELIABLE THERMO - CONVERTER. — Dr. Moll. (*Journ. Scien. Instruments*, April, 1926, pp. 209—210.)

Description of apparatus for transforming alternating into direct current by means of the thermo electric effect. In combination with a good milli-voltmeter it forms an instrument of high precision for alternating current measurements.

R260.—MESSUNGEN DES SPANNUNGSABFALLES AU HOCHSPANNUNGS-ELEKTRONEN-RÖHREN SOWIE AU EINER EINRICHTUNG ZUR BEEINFLUSSING DESSELBEN (Measurements of the voltage drop in extra-high voltage valves and a means of influencing the same).—Max Wellauer. (*Archiv. f. Elektrotechnik*, 6th April, 1926, pp. 13—27.)

The voltage drop in high-frequency valves is generally taken to be small in comparison with the rectified voltage and not dependent upon it. Likewise it can be considered as independent of the value of the anode current so long as this remains below the saturation value. In this article an account is given of abnormal behaviour of the voltage drop, observed during experiments on insulating materials with valve rectified current, and the attempts made to investigate it. The experiments were carried out in the physical laboratory of the Verlikon machine factory and the principal conclusion drawn from the experiments is that under certain circumstances screening the valves electrostatically improves the efficiency.

R261.—A VALVE VOLTMETER WITH SELF-CONTAINED BATTERIES.—C. R. Cosens. (*Journ. Scien. Instruments*, March, 1926, pp. 181—187.)

Description of a grid-type of triode voltmeter, with self-contained batteries, so that it is easily portable.

R281.—ISOLANTITE.—A. Lescarboura and R. Kruse. (*Q.S.T.*, April, 1926, pp. 14—16.)

An account of this insulating material, which is said to be twice as hard as glass, tougher than cast iron, completely moisture proof, electrically excellent, and capable of being machined accurately.

R283.—LEGIERUNGEN MIT BESENDEREN MAGNETISCHEN EIGENSCHAFTEN (Alloys with particular magnetic properties).—H. Freese. (*Zeitschrift f. Hochfrequenz.*, 27, 3, pp. 86—97.)

The employment of ferromagnetic material for frequency changers and control and modulation chokes has directed the attention of high-frequency technique to the metal alloys, with special magnetic properties, which have become known in recent years. Since the literature on these alloys is very scattered and often difficult of access, the results of the most important works on the subject are brought together in this article. Detailed information is given of the Heusler alloys and those of the iron groups, with numerous graphs, and a bibliography of the subject is appended.

R300.—APPARATUS AND EQUIPMENT.

R321.9.—SLEET REMOVAL FROM ANTENNÆ.—J. H. Shannon. (*Proc. I.R.E.*, April, 1926, pp. 181—195.)

A method is described for automatically releasing the antenna wires in case of excessive sleet load, for if the wires should break under a heavy coating of ice, serious damage to the self-supporting towers would result, due to the unbalanced load. A description is also given of a new type of suspension condenser developed to prevent the low frequency energy going to the ground, and thus making it possible to melt sleet from the individual antenna wires of the multiple-tuned antenna without the use and inconvenience of complicated switching at each ground point. The mechanical as well as the electrical design of this condenser is said to be unique.

R331.—THE MANUFACTURE OF RADIO VALVES. (*Electrical Review*, 23rd April, 1926, pp. 648—650.)

Some impressions of a visit to the Mullard Co.'s thermionic valve factory.

R331.1.—METALS FOR RADIO.—H. Seymour. (*Electrician*, 9th April, 1926, p. 409.)

An account of the properties of tantalum and molybdenum which render these metals valuable in vacuum tube construction.

R340.—BROADCAST RECEPTION WITH FOUR-ELECTRODE VALVES.—F. L. Devereux. (*Wireless World*, 7th April, 1926, pp. 512—516.)

Description of the use of four-electrode valves which, when suitably connected, require a maximum H.T. voltage of only 15 volts, making possible the employment of a small accumulator H.T. battery as anode supply.

R342.—PEAKED AUDIO AMPLIFIERS.—R. Kruse. (*Q.S.T.*, April, 1926, pp. 29—32.)

Account of the development of an audio amplifier having a peaked curve of amplification against frequency, suitable for amateur short-wave C.W. work.

R343.—UN RÉCEPTEUR NEUTRODYNÉ ETUIDÉ POUR LA GAMME DE 200 À 3,000 METRES (A neutrodyne receiver for the range between 200 and 3,000 metres).—L. Berthet. (*Radio-électricité*, 10th March, 1926, pp. 90—92.)

An illustrated description of this receiver with which it is claimed nearly all the European broadcasting stations can be received.

R343.—THE SHIELDED NEUTRODYNE RECEIVER.—J. Dreyer, Jr., and R. Manson. (*Proc. I.R.E.*, April, 1926, pp. 217—247.)

An exhaustive account of this device, including a brief historical outline of its development, with 23 figures.

R343.—SELECTIVE RECEPTION. (*Electrician*, 9th April, 1926, p. 415.)

A brief account of the Marconi Type RG6A

Digitized by Google

receiver which, it is claimed, can be regarded as the most selective and sensitive receiver of its class yet designed. Owing to the tuning circuits being screened against any alien inductive action, it is very suitable for simplex and duplex telegraph or telephone working in either ship or shore stations.

R344.3.—THE USE OF SMALL RECEIVING VALVES FOR TRANSMITTING.—A. Wood. (*E.W. & W.E.*, April, 1926, pp. 223—224.)

R344.8.—THE WAVE FORM OF THE CURRENT IN AN ELECTRICALLY MAINTAINED TUNING-FORK CIRCUIT.—V. H. SEARLE. (*Philosophical Mag.*, April, 1926, pp. 738—747.)

In view of the frequent use which is made of the electrically maintained tuning-fork as a standard of frequency, an investigation is made of the form of the current flowing through such a circuit and of the purely electrical factors which exert influence on the current form.

R350.—ELEKTRISCHE WELLEN IM GEBIETE DES AÜSSEREN ULTRAROT (Electric waves in the region of the extreme infra red).—M. Lewitsky. (*Physikalische Zeitschrift*, 15th March, 1926, pp. 177—182.)

Two systems of oscillators are described, each consisting of very small pieces of molybdenum wire .2 mm. thick, but in one the length of the individual oscillators varied from .1 to .4 mm., while in the other all the oscillators were of the same length—.1 mm. The little oscillators were fixed to a glass plate in a layer of Canada balsam in parallel rows as near together as possible. Several rows were necessary in order to obtain a sufficiently strong radiation. The oscillators were excited by an induction coil through a transformer with a secondary having as many coils as there were rows. A separate source of voltage for each row was necessary to secure the voltage in each being the same and a spark passing in all the rows, since it was impossible to make the length of the spark-gap exactly equal in every row. Failing this adjustment, a spark would pass only in the row with the least resistance.

The length of the wave radiated by the oscillators was measured with both plane and concave diffraction gratings. The maxima were observed with a thermo element—which had to be very sensitive on account of the extreme weakness of the radiation. Wavelengths ranging from 30 to 915μ were found with the first system and from 34 to 475μ with the second system.

It is stated that, owing to the minute energy of the oscillations, a far more powerful source of these short waves would have to be discovered in order to investigate their properties and laws of radiation.

R376.3.—AN ELECTROSTATIC LOUD-SPEAKER.—Dr. Kröncke. (*Wireless World*, 17th March, 1926, pp. 397—398.)

Details are given of an electrostatic loud-speaker in use in Germany.

R400.—SYSTEMS OF WORKING.

R410.—SINGLE SIDE-BAND TRANSMISSION.—E. K. Sandeman. (*Wireless World*, 31st March, 1926, pp. 487—489; 7th April, 1926, pp. 529—532.)

After reviewing the principles of ordinary telephony transmission, the nature of the wave transmitted from Rugby is explained, and technical details are given of the system used in transatlantic telephony.

R420.—ON THE WIRELESS BEAM OF SHORT ELECTRIC WAVES (I.).—S. Uda. (*Journ. Inst. Elect. Engineers of Japan*, March, 1926, pp. 273—282.)

The electric intensities of the field due to the oscillator itself (without antennæ and reflectors) are first observed in various directions around it. Here the plate and grid coils in the oscillation circuit form the radiators of short radio waves. The distribution of electric field intensities in the horizontal plane containing the oscillator is not uniform in all directions, the maximum values of their vertical components being in the directions of the plane of the plate and grid coils, while in these directions the horizontal component is negligibly small and *vice versa* for directions normal to the plane of the coils.

Polar diagrams are given of the effect upon the field intensities and distribution of placing an antenna, consisting of a brass rod in various positions near the oscillator. The results of trying to obtain a unidirectional field with three rod antennæ are also shown.

R421.—THE LORENZ HIGH FREQUENCY SYSTEM FOR RADIO TRANSMISSION.—F. Gillard. *E.W. & W.E.*, April, 1926, pp. 215—219.)

R430.—LE SECRET EN RADIOTÉLÉGRAPHIE (Secrecy in Radiotelegraphy). — Général Cartier. (*Radioelectricité*, 10th March, 1926, pp. 84—89.)

An illustrated account of an improvement of the Damm system, which was described in *Radioelectricité* for 10th January, 1926, pp. 6—10.

R440.—UNE STATION RADIOÉLECTRIQUE COMMANDEE À DISTANCE PAR UNE LIGNE TÉLÉPHONIQUE (A radio station controlled from a distance by a telephone line).—L. Chauveau. (*Radioélectricité*, 25th March, 1926, pp. 101—107.)

An illustrated description of the way in which the radio station at Saint-Cyr is controlled from Villacoublay.

R500.—APPLICATIONS AND USES.

R510.—LA T.S.F. DANS LES RÉGIONS POLAIRES (Wireless Telegraphy in the Polar Regions).—W. Sanders. (*Radioelectricité*, 25th March, 1926, pp. 108—109).

An account of the services rendered by radio on

Digitized by Google

the expedition of the "Pourquoi Pas" to the Arctic Seas last summer, a report of which has just been published by Commandant Charcot.

R530.—TELEPHONING ON TRAINS. (*Wireless World*, 7th April, 1926, pp. 517—519.)

Illustrated account of new wireless telephony equipment now working on the German railways.

R530.—LONG WAVES FOR TRANSATLANTIC TELEPHONY. (*Wireless World*, 17th March, 1926, pp. 411—412.)

Account of an interview with M. Marius Latmer, in which he expresses his belief that long waves, rather than short, will be used for transatlantic wireless telephony.

R540.—SHORT WAVES IN IRAQ.—Capt. Durrant. (*Wireless World*, 7th April, 1926, p. 528.)

R557.—BROADCASTING IN RUSSIA. (*Electrical Review*, 16th April, 1926, p. 623.)

There are six broadcasting stations of 2,000 watts under construction, and one of 50,000 watts, with five stations in Moscow, where the public reading rooms are equipped with receivers and loud-speakers. It is estimated that over 20,000 Russians in Moscow alone have managed to build and operate their own sets without the knowledge of the authorities. Broadcasting in Russia is under the control of the Commissariat of Posts and Telegraphs.

R557.—BROADCASTING IN AUSTRALIA. (*Electrical Review*, 16th April, 1926, p. 623.)

Australia has at present ten broadcasting stations situated in or near large towns. Two of these, the Sydney station and that of Perth, are rated at 5 kilowatts and work on wavelengths of 1,100 and 1,250 metres respectively. The remainder, with the exception of 3LO, the Melbourne station, which is rated at 5 kilowatts, are medium or low-power stations. All of them work on wavelengths between 300 and 500 metres. One, Brisbane, which is rated at 3,750 watts, and works on a wavelength of 385 metres, is conducted by the Government; the Post Office has placed telephone lines at the companies' disposal for simultaneous broadcasting.

The revenue from licence fees is divided amongst the broadcasting companies, a larger proportion being paid to those which operate high-power stations. The area allotted to each company is divided into zones, and the amount of the licence fee depends upon the zone in which the listener lives. At present, those whose homes are within a radius of 250 miles of a broadcasting station pay 35s. for the first year and 27s. 6d. a year afterwards.

R565.—RECENT ADVANCES IN MARINE RADIO COMMUNICATION.—T. M. Stevens. (*Proc. I.R.E.*, April, 1926, pp. 197—204.)

The development and use of vacuum tube apparatus by commercial and Government stations has not only doubled the range of marine communications, but has also made it possible to carry on a more extensive service with a far smaller number of corresponding stations on shore. Discontinuance of the use of spark apparatus at coast stations, and to a large extent on shipboard, has almost totally eliminated the interference formerly experienced.

R582.—TRANSMISSION AND RECEPTION OF PHOTO-RADIOGRAMS.—R. Ranger. (*Proc. I.R.E.*, April, 1926, pp. 161—180.)

A survey of the development of the art of electric picture transmission from its inception in 1842 to the present day.

The basic elements of all picture transmission systems are shown to consist of synchronously covering a surface, point by point, at both transmitter and receiver, and electrically identifying point values at the receiver so that any integral section of the received copy will have the same relative tonal value as the identical integral section on the transmitting surface.

A recent development by the Radio Corporation of America, known as the "photoradiogram" system, is described at length. This is a picture shorthand method, evolved from the standpoint of economy, and claimed to have considerable possibilities commercially, in particular for the newspaper service, and the transmission of words either printed, typewritten or handwritten.

R600.—STATIONS: DESIGN, OPERATION AND MANAGEMENT.

R611.—THE RUGBY WIRELESS STATION.—Dr. W. H. Eccles. (*Nature*, 17th April, 1926, pp. 557—558.)

Description of the most powerful wireless station in the world, designed by the Wireless Telegraphy Commission, and erected by the Wireless Section of the Engineering Department of the Post Office.

The station abounds with novel features, to mention only the form of the antenna, which consists merely of one conductor running round the circumference of the site, and the means of supplying it with oscillatory current—a valve-maintained tuning-fork.

R615.57.—AMERICA'S NEW HIGH-POWER BROADCASTING STATION.—A. Dinsdale. (*Wireless World*, 31st March, 1926, pp. 495—497.)

A description of the station at Bound Brook, N.J., giving particulars and photographs of the plant.

R625.—INTERNATIONAL RADIO TELEGRAPHY. (*Electrical Review*, 16th April, 1926, p. 623.)

Representatives of the principal wireless telegraph companies interested in international radio communication met recently at Monte Carlo. The chief aim of the conference is to prepare for the opening up, within a short period, of wireless communication between Brazil and other countries. The powerful station at Rio de Janeiro is nearing completion, and satisfactory trials have already been made; 21st April has been fixed as the date on which direct wireless services between Brazil and the United States, France, Great Britain, Germany and Italy will be inaugurated. The Rio de Janeiro station has twelve pylons 200 metres

Digitized by Google

high and a power of 500 kw. Transmission on short wave will be employed as well as on the long wave, which has already been tested.

R800.—NON-WIRELESS SUBJECTS.

R539.—On Entropy of Radiation II.—M. Saha and R. Sur. (*Philosophical Magazine*, April, 1926, pp. 890—893.)

A mathematical note.

R.539—Die Grundgesetze der Elektrischen and Magnetischen Erregung von Standpunkte der Quantentheorie (The fundamental laws of electric and magnetic excitation from the standpoint of the quantum theory).—P. Debyi. (*Physikalische Zeitschrift*, 18th February, 1926, pp. 67—74.)

A mathematical discussion.

621.374.3.—Some Applications of the A.C. Potentiometer.—T. Spooner. (*Journ. Scien. Instruments*, April, 1926, pp. 214—221.)

Certain applications of the A.C. potentiometer are described for which the Tinsley-Gall type is especially suitable. These include the measurement of the values of inductance and effective resistance, and the amplification factor of audio-frequency amplifiers.

621.374.9.—Sur un Nouvel Enregistreur de Température et de Pression pour l'étude de la Haute Atmosphère (A new instrument for recording temperature and pressure for the investigation of the upper atmosphere) —E. Delcambre, P. Idrae and F. Geoffre. (*Comptes Rendus*, 29th March, 1926, pp. 858—859.)

Esperanto Section.

Abstracts of the Technical Articles in our last Issue.

Esperanto-Sekcio.

Resumoj de la Teknikaj Artikoloj en nia lasta Numero.

R100.—GENERALAJ PRINCIPOJ KAJ TEORIO.

R113.1.—Velkado.—Lekcio farita de Prof. E. W. Marchant, D.Sc., antaŭ la Radio-Societo de Granda Britujo.

La temo pri velkado estas konsiderita laŭ ĝenerala vidpunkto. Fruaj raportoj pri ŝirmado pro geografiaj kaŭzoj estas menciitaj, notinde rezultoj cititaj de D-ro. Eccles kaj Sir Henry Jackson. Similaj efikoj ĉe ricevado de diversaj brodkastaj stacioj estas ankaŭ aluditaj. Poste estas konsiderita la efiko pro l'atmosfero, kun diskuto pri la produkto de ionizita tavolo. Oni montras, ke la mallongaj limoj de sendada formularo malaplikebligas ĉi tiujn rilate al la distancoj atingitaj per malgrandaj potencoj je mallongaj ondoj.

Sekvas priskribo de la lastatempa eksperimentado pri la Tavolo Heaviside, kun aparta aludo al la laboro de Prof. E. V. Appleton koncerne la mezuradon de l'angulo de la malrekta radio, al la laboro de S-ro. Hollingsworth, taksante, ke la Tavolo kuŝas je 70 k.m., kaj al la laboro de la Kompanio Marconi dum ties mondvojaĝo. Oni ankaŭ publikigis la longan diskutadon, kiu sekvis la lekcion.

R143.—Perdoj ĉe Induktancaj Bobenoj.—La Bezono por Normo de Efikeco.—S. Butterworth.

Oni diskutas la bezonon por starigo de normo, per kio la funkciado de agorda bobeno povas esti difinita. Valoro bazita je la faktoro de potenco estas proponita, tial ke ĉi tio estas sufiĉe konstanta ĉirkaŭ la sfero de funkciado de bone desegnita bobeno. La bobenon oni povus uzi kun norma cirkvito de, ekzemple, 0.002μF kaj de ekstera rezisteco de 20 omoj, kaj kun norma bobeno, kies potenca faktoro estas 0.005. Oni sugestas, ke la proporcio de volta pligrandiĝo ĉe la provata bobeno al tiu ĉe la norma estas la " Faktoro de Intenseco " difinanta la efikecon de la bobeno. Tabelo montras ciferojn por kelke da bone konataj vind-metodoj.

R144.—Efektiva Rezisteco de Induktancaj Bobenoj je Alta Frekvenco.—S. Butterworth.

Ampleksa konsiderado pri la temo de altfrekvenca rezisteco.

En Parto Ia (kiu aperis en la Aprila numero), oni diras, ke la diskutado celas planon desegnan por trovi por ĉiu racia bobenformo la plej bonan fadenan diametron kaj interrespondan perdon.

Konsiderinte ĝenerale la kuprajn perdojn ĉe induktancaj bobenoj, la aŭtoro transiras al detala studo pri la alternkurenta rezisteco de longa rekta fadeno, pritraktante respektive frekvencojn malaltajn, altajn, kaj mezaltajn. Li poste pasas al la konsidero pri kirlkurentaj perdoj en cilindro, kiam tio estas metita en konstantan magnetan kampon, pritraktante respektive frekvencojn malaltajn kaj altajn. Li donas esprimojn por la efektivaj rezistecoj je la ekzemploj konsideritaj, kun tabelo por faciligi la kalkuladon.

En Parto IIa (Majo), la alternkurenta rezisteco de du paralelaj fadenoj estas konsiderita kaj la rezonado etendita rilate al mallongaj bobenoj (solenoidaj aŭ diskaj), kun interspacaj paralelaj vindajoj. La rezonado estas poste aplikita rilate al solenoidoj unutavolaj de ampleksoj pli ofte

Digitized by Google

renkontitaj en la praktiko, kaj de diskaj bobenoj unutavolaj.

Pluaj tabeloj estas presitaj por la kalkulado de certaj terminoj aperintaj en la diversaj esprimoj uzitaj. La korekton kontraŭ memkapacito oni diskutas, dum sekcio pritraktas la apartigon de la perdoj ĉe unutavolaj bobenoj. La artikolo finiĝas per tre utila sekcio ilustranta la efikon de interspacado.

La demando pri la plej bona bobenformo estas prokrastita ĝis la formularo por mult-tavolaj bobenoj estos pritraktita.

R300.—APARATO KAJ EKIPAĴO.

R330.—Detaloj pri Germanaj Valvoj por Amatoroj.

Tabelo elĉerpita el *Die Audionvohre und Ihre Wirkung* (de D-ro. Gustav Liebert), kies recenzo aperas sur la antaŭa paĝo en sama numero. La tabelo montras la Tipon, Fabrikiston, Filamentan kaj Anodan Konstantojn, Amplifecon, Rezistecon, kaj utilojn de proksimume 40 diversaj valvoj germanaj.

R355.55.—Nova Valva Rektifikatoro.—L. A. Sayce.

Priskribo pri nova termiona rektifikatoro fabrikita de la Phillips Lamp Company. La valvo havas filamenton kaj du anodojn por provizi plenan ondan rektifadon, kvankam la aŭtoro ilustras cirkviton por nur duononda rektifado, kun la du anodoj paralele aranĝitaj. Rektifita elmeto ĝis 1.3 amperoj estas atingebla. La filamento bezonas provizon 2-voltan, haveblan pere de ekstra vindajo ĉirkaŭ la transformatoro.

R381.4.01.—La Rekt-Linia Interrilato.—D-ro. Oliver Hall.

La artikolo diskutas la komparon inter kondensatoroj de la duonronda kaj de la "kvadrat-leĝa" specoj. Pro restanta kapacito kaj hazarda kapacito en la cirkvito, kvadrat-leĝa kondensatoro donas nur linian interrilaton ĉirkaŭ la supra parto de la ciferplata gradaro, kaj oni montras, ke la ĉeesto de ĉi tiuj fiksaj kapacitoj malatingebligas rektlinian interrilaton en la praktiko.

Oni montras per tabeloj kaj kurvoj ke, ĉar la skalo de variado de kondensatoro estas malpliigita, la duonronda speco, se uzita por skalo de, ekzemple, 20 metra agordo, efektive produktas rektlinian interrilaton. Simila ekzemplo pruviĝas por la reguligo de frekvenco ĉirkaŭ malgranda skalo de variado.

Laborejaj Notoj.—E. Bainbridge Bell.

R.387. (1) Elektrostatika ŝirmilo. — Priskribas metodon fari ŝirmilon por utiligo inter du "flanformaj" bobenoj uzitaj kiel aerkerna transformatoro.

R381.5 (2) Kondensatora Potenciometro.—Priskribas la uzon de du kondensatoroj laŭserie aranĝitaj por la korekto de "antena efekto" ĉe kadra anteno, kaj diskutas aranĝojn por variigi ilin kontraŭdirekte, tiel ke ilia tuta kapacito restas konstanta, kaŭzanta nenian ŝanĝon de kadra agordo.

R387.—Hidrargaj Kontakt-Komutatoroj kaj Konektaj Tabuloj.—T. B. Baker.

La uzo de plastika amalgamo, anstataŭ pura hidrargo, estas rekomendita por ĉi tiu celo, kun instrukcioj por la preparado de taŭga amalgamo, ekzemple, de hidrargo kaj stano. Kelke da malsamaj bazoj estas priskribitaj, kun diversaj kontaktiloj por provizi variajojn de komutmetodoj. Multobla konekta tabulo laŭ la sama principo estas ankaŭ priskribita, kaj ĝiaj utilecoj ilustritaj. Oni donas instrukciojn pri la konstruo de la diversaj partoj.

R500.—APLIKOJ KAJ UZOJ.

R582.—Senfadena Foto-Telegrafio.

Priskribo pri la sistemo de Thorne Baker, kun diskuto pri ĝia apliko al brodkasta sendado.

R. 600—STACIOJ: DESEGNADO, FUNKCIADO, KAJ ADMINISTRADO.

R611.—La Radio-Stacio Rugby de la Brita Poŝt-Oficejo.

Resumo de referato legita de S-ro. E. H. Shaughnessy, O.B.E., antaŭ la Senfadena Sekcio de la Institucio de Elektraj Inĝenieroj. Priskribitaj estas la potencilaro, la mastoj kaj antenoj, sed la pligranda parto de la referato estas dediĉita al priskribo de la senfadena aparataro.

Generado de la alta frekvenco por radio-telegrafa sendado estas per valve funkciigita agordilo, kies elmeto estas amplifita, 9a harmoniko elfiltrita, kaj ĉi tiu frekvenco plue amplifita ĉe la agordila sekcio. Ĝi estas poste pasigita tra tri sinsekvaj ŝtupoj de amplifado, antaŭ ol ĝi atingas la antenajn cirkvitojn, la ŝtupoj traktantaj enmetajn potencojn de 4, 50, kaj 1,000 kilovatoj respektive. Presitaj estas diagramoj de la agordila sekcio, la aranĝoj por potenca amplifado, la antena kaj fermita cirkvitoj, k.t.p. Al la resumo estas aldonita fotografajaro, ilustranta diversajn el la objektoj kaj sekcioj aluditaj en la teksto. Presita ankaŭ estas diskutado pri la referato.

R800.—NE-RADIAJ TEMOJ.

510.—Matematiko por Senfadenaj Amatoroj. —F. M. Colebrook.

Komenciĝo de serio pri tiu temo. La enkonduka parto emfazigas la gravecon kaj utilecon de matematiko, kaj indikas la amplekson de la serio. La sekcioj pritraktotaj estos (I.) Elementa Algebro, (II.) Ebena Geometrio, (III.) Trigonometrio, (IV.) Elementa Kalkuluso, (V.) Vektoroj.

Komenciĝas la unua sekcio pri Elementa Algebro, kun klarigoj kaj ilustrajoj pri la fundamentaj leĝoj de algebro rilate al adicio kaj subtraho.

Digitized by Google

Correspondence.

Letters of interest to experimenters are always welcome. In publishing such communications the Editors do not necessarily endorse any technical or general statements which they may contain.

How Far is that Station?

To the Editor, E.W. & W.E.

SIR,—I have read the article in the current number of your magazine entitled "How Far is that Station?" with much interest, but cannot agree with the results. Take the example Cambridge to KDKA.

Lat. Cambridge = 52° 12′N.
Lat. KDKA = 40° 27′N.

One is going from north to south, therefore one's course is south.

Again—

Long. Cambridge = 0° 08′E.
Long. KDKA = 79° 56′W.

One is going from east to west, and the course is West. That is, south and west course. How does your contributor make it west of north?

Again, I have worked out both course and distance as one would navigate a ship using Nories' tables, and I cannot agree either course or distance. You will find the method given in the Admiralty *Manual of Navigation*, also in other standard works.

Lat. Cambridge	52° 12′N.	Mer. parts.	3,685	Long.	0° 08′E.
„ KDKA	40° 27′N.	„ „	2,058		79° 56′W.
Dif. Lat. ...	11° 45′	Dif. do.	1,027	D. Long.	80° 4′
	60°				60°
	7.05′S.				4,804′W.

Tan course $\frac{d \text{ Long.}}{d \text{ Mer. parts}} = \frac{4,804}{1,027}$

4,804 *log* 3·681603
1,027 *log* 3·011570

·670 033 = *log tan* of course
= 77° 56′ nearly S. and W.

Dif. Lat. *sec* course = 705 *sec* 77° 56′

705 *log* = 2·848189
77° 56′ *log* sec. = 10·679751

13·527940

Discarding 10 gives 3·527 940 = *log* of distance = 3.372 naut. miles.

Glasgow. JAMES ANDERSON.

To the Editor, E.W. & W.E.

SIR,—I have just returned from abroad and received your letter of the 21st ult., which I will answer without delay as some time has elapsed. The information of your correspondent, Mr. Anderson, is incomplete, and he shows that he is confusing the geometry of a sphere with his experience of plotting on squared paper. He says that to go from 52° N. to 40° N. one is going "from north to south." It does not follow. If the second place was on the other side of the world by 180° one would go *northwards* to get there. Again, cut the earth in half by a line passing east and west through London. The cut would pass through Panama (and south of it from Glasgow). Obviously, then, all places in North America lie to north of west from England. And remember, lines of *latitude* are not "great circles."

Your correspondent quotes a method taken from the Admiralty *Manual of Navigation*. I happen to have the 1914 edition of this, and I see that he is employing Chapter IV. on thumb-line sailing. This has nothing to do with the case, and is a device for reaching a given port by a single unchanging compass bearing, and is a longer way round. Let him go on to Chapter V., "The Great Circle Track," and study that. But as seamen use haversines in their calculations, and land mathematicians do not employ these tables, the method is of little value for them and for wireless.

To say more would involve a long explanation of the subject. Mr. Anderson should get hold of a globe in a shop or somewhere and lay off a few straight lines across it with the edge of his handkerchief. He will see that places which lie in a straight line look very funny when plotted back on the distorted "Mercator," as I have already said.

Braintree. H. E. ADSHEAD.

Power Loss in Condensers.

To the Editor, E.W. & W.E.

SIR,—With reference to my article on air condensers in the April issue of *E.W. & W.E.*, Mr. Butterworth asks the question: Has the power factor of an air condenser of capacity less than 200$\mu\mu$F ever been measured at radio frequencies without assuming another air condenser free from loss? As far as I am aware, no satisfactory method has been published by means of which the power factor of such small air condensers may be determined directly and absolutely. Mr. Wilmotte's work, to which Mr. Butterworth referred, enables us to assign an upper limit to the power factor of an air condenser of, say, 600$\mu\mu$F, but it has not been applied directly to smaller condensers. It is, of course, possible to compare a number of small condensers with each other, and then to put them in parallel and compare their sum with a larger condenser which has been standardised in this way, and by such measurements an upper limit can be assigned to the power factors of small condensers, though the accuracy obtainable diminishes as the condensers become smaller.

Alternatively, if we know the power factor of a variable air condenser at a point near the top of its scale, then by assuming that the total power losses are independent of the condenser setting, we can assign an upper limit to the power factor of the condenser at any lower setting. If the actual air space is free from power loss, then we arrive at the true power factor at the lower setting, but if there is a small amount of loss in the air, the calculated power factor will be rather high.

The measurements referred to in my article were

Digitized by Google

essentially of a comparative nature. Mr. Wilmotte had, however, also made measurements on some of the condensers, so that the values given are not without foundation on an absolute basis.

National Physical Laboratory, Teddington. L. HARTSHORN.

The Mystery of Fading.

The Editor, E.W. & W.E.

SIR,—I have read with considerable interest the article by Dr. Oliver Hall, entitled "The Mystery of Fading," particularly in view of the fact that there is a certain similarity between some of the curves shown and some of those given in an article by the writer in the issue of *E.W. & W.E.* for July, 1925.

Dr. Oliver Hall plots certain curves, and derives certain deductions therefrom, the curves being obtained by aural methods. It is stated that signal intensity is estimated by listening to the output of a loud-speaker some twelve feet from the observer. The article states that "it is scarcely necessary to say that all observations of this kind cannot be compared with instrumental observations, but where instrumental observations are not possible aural methods are not to be despised." While broadly agreeing with this statement, the writer ventures to suggest that aural observations may be a source of considerable error, and lead to totally inaccurate deductions.

If we assume that the voltage produced across the terminals of the loud-speaker is directly proportional to the received signal energy, then we obtain a first approximation by plotting estimated sound intensity against time. It is important to remember, however, that this estimated sound intensity is in no way absolute. It is entirely a matter of comparison and relativity, since there is a personal element. The most important factor enabling us to determine an increase or decrease in volume is the rate of change. A very small increase or decrease occurring during a short period is immediately appreciated by most listeners, whereas it is almost impossible to detect a very large change in intensity when the time period is long.

Hence, it follows that any curves which are plotted by aural means really only show variations where the rate of change is comparatively great. Dr. Oliver Hall states in the article that "practically every case of fading in the second set of observations took place quite suddenly." This statement, derived from aural observation, certainly means that at the period immediately preceding minimum the rate of change was great, but it gives little indication of what was actually happening during the periods immediately preceding the period before minimum.

The writer does not suggest that the received current was not substantially constant during the periods before the minimum period, particularly in the case of the Bournemouth fade, where the curve is almost identical with that shown on page 651 of *E.W. & W.E.*, July, 1925, by the writer. It is interesting to note, however, that while a curve such as Fig. 2 shown in Dr. Oliver Hall's article may be obtained by aural observation, a totally different curve may be obtained for actual signal strength as measured by the aid of instruments.

All the curves shown by Dr. Oliver Hall are of an irregular character, which leads him to state that "Fading is an irregular phenomenon, and the worst thing that an investigator can do is to start off with the preconceived notion that fading is connected with some definite numerical quantity. . . ."

The writer would venture to suggest that a few observations such as those recorded are certainly not sufficient to justify the opinion that fading is irregular. Surely Dr. Oliver Hall must be aware of the very large number of records of competent observers showing perfectly regular fading. The writer was under the impression that fading was recognised as being either periodic or aperiodic, and, further, that modern theories as to its cause and nature explain equally well either a regular or irregular variation. Had Dr. Oliver Hall taken accurate plottings, true curves would have been obtained, which no doubt would be capable of mathematical treatment and help to remove some of the "mystery." Perhaps Dr. Oliver Hall would be good enough to explain a little more fully the justification of his statement that "Fading is an irregular phenomenon."

PAUL D. TYERS.

Watford, April, 1926.

"Aperiodic" or "Untuned"?

The Editor, E.W. & W.E.

SIR,—There seems to be a growing tendency towards the misuse of the term "aperiodic." The untuned primary coil of the popular "low-loss" pattern short-wave tuner is often spoken of as "untuned *or aperiodic*" as if the terms were synonymous, which they are not.

The meaning of the term "untuned" is exactly what one would expect—the circuit or inductance referred to is not intentionally tuned to a definite frequency. Of course, any circuit which contains capacity and inductance must have a natural frequency (even when not purposely tuned) but in the type of tuner referred to, the natural frequency of the aerial or primary coil is so arranged to be outside the working frequency range of the secondary (tuned) coil.

"Aperiodic" means "without period," or as applied to tuning circuits, without any definite natural frequency. Thus, an aperiodic coil will respond to *all* frequencies with equal efficiency thus being the exact reverse to a tuned coil, which responds to one definite frequency only. In a rejector circuit, for instance, such as is used for tuning out local interference, the coil by-passes all the interfering frequencies, but rejects the desired one, which passes in the usual way to the tuner of the receiving set.

In such a circuit, the rejector coil is always wound with very thick wire, so as to reduce the resistance of the coil, thus reducing damping, and increasing selectivity. Clearly, if we desire to make an aperiodic coil, we must do the reverse, that is, use very thin wire, which will have a high

Digitized by Google

resistance, in fact, resistance wire. If the resistance of the coil is correct, then we shall have a truly aperiodic coil.

A tuning coil or circuit can *only* be aperiodic when

r^2 is greater than $4L/C$,

where r = resistance,
L = inductance,
C = capacity,

and therefore, the untuned primary coil of a short wave or Reinartz pattern tuner, containing four or five turns of stout copper wire, with negligible resistance, cannot be described as aperiodic, but simply "untuned" which is more nearly correct.

F. A.

---

j, the Heaviside Operator, and $\sqrt{-1}$.

To the Editor, E.W. & W.E.

SIR,—May I suggest that in your editorial of May, 1926, it is rather misleading to say :—

"that as

$$D \sin \omega t = \omega \cos \omega t$$
$$D \cos \omega t = -\omega \sin \omega t$$

by treating these as algebraic equations, and squaring and adding each side, it follows that

$$D^2 = -\omega^2."$$

By the application of algebraic methods to these equations we obtain—

$$D^2 = +\omega^2.$$

The truth of the expression—

$$D^2 = -\omega^2$$

is obtained by writing—

$$d/dt \sin \omega t = w \cos \omega t$$
$$d^2/dt^2 \sin \omega t = -\omega^2 \sin \omega t$$

and hence the operator—

$$d^2/dt^2 = -\omega^2.$$

The expression $j\omega L$ is obtained in a similar way by writing instead of $i = I \sin \omega t$,

$$i = I.e^{j\omega t}$$

whence $di/dt = j\omega i.$

In the one case $-\omega^2$ is written for the operator D^2, and in the second case $j\omega$ for the operator D.

The replacing of the operator D by jw is a convenience for determining the effective resistance and effective inductance of a circuit containing a periodic electromotive force that many students of electricity and magnetism would not care to abandon, but your valuable journal and your contributors have done us yeoman service by drawing attention to the precise meaning of such an expression as $R+j\omega L$ for impedance.

Portsmouth, Hants. MALCOLM G. RILEY.

[The statement which Mr. Riley kindly suggests is rather misleading is really a mistake. It is not by squaring and adding each side, but by multiplying the two left-hand sides and the two right-hand sides and equating the products, that we get $D^2 \sin \omega t = -\omega^2 \sin \omega t \cos wt$, and hence $D^2 = -\omega^2$. By squaring and adding each side we get $D^2 (\sin^2 \omega t + \cos^2 \omega t) = \omega^2 (\sin^2 \omega t + \cos^2 \omega t)$, and hence $D^2 = w^2$. Thus the application of simple algebraic methods leads to two contradictory results. Although caused by a careless slip on our part, this brings out more clearly than ever the impossibility of regarding D as an ordinary algebraic quantity.—G. W. O. H.].

Fading.

The Editor, E.W. & W.E.

SIR,—In my opinion the cloud has not been regarded sufficiently as a source of trouble concerning fading or as a reason for freak reception, especially of the local kind.

The effect of air pressure on reception is, I think, more likely to be due to movements of clouds caused by the change in air pressure rather than an alteration in the ionisation of the atmosphere, the change in pressure usually being insufficient to be effective.

Further, the conductivity of a cloud is far greater than that of ionised air. When the water in the cloud has dissolved a little carbon dioxide thus forming carbonic acid the conductivity will rise rapidly. Thus a cloud is a large reflector moving about in the air, reflecting and deflecting radio waves, giving rise to freak reception, and local fading.

Many amateurs and professionals would, I think, do well to give the Heaviside layer a rest and pay more attention to the cloud.

W. H. MADDISON
Stamford Hill, N.16. (2BOX).

"Effective Resistance of Inductance Coils at Radio Frequency." By S. Butterworth.

Part III of this article is unavoidably held over until next month on account of pressure on our space.

"The Use of Small Receiving Valves for Transmitting." By A. G. Wood.

We are asked to explain that the article under the above title, published in *E.W. & W.E.*, for May, was long delayed before publication was given and, therefore, the results obtained compare unfavourably with present DX results which have made such remarkable progress since the date when this article was prepared.

ERRATUM.

May issue :—

Page 265, Editorial, 2nd column, line 8, *for* "squaring and adding," *read* "multiplying."

Digitized by Google

Book Reviews.

THE SLIDE RULE SIMPLIFIED. By D. E. Rogers, pp. 76. Drawing Office Supplies, Ltd. Price 5s.

This is a plain straightforward book of instruction on the Slide Rule, in which every operation is clearly explained and illustrated by numerous examples. Even those who have used a slide rule for many years will find some useful hints on such things as taking out cube roots; at least that was our experience and we can recommend the book.

MODERN RADIO COMMUNICATION. By J. H. Reyner, pp. xi.+208 with 121 Figs. Pitman. Price 5s.

This is a book which we can recommend to any earnest student of the subject. It assumes an elementary knowledge of electricity and magnetism but deduces everything as far as possible from first principles. It is as non-mathematical as it is possible to make a text-book covering the syllabus of the City of Guilds examination in this subject. It has only been possible to cover the ground in 200 pages by omitting those branches of the subject which are now only of historical interest, and this is indicated in the title. Text and diagrams are clear and well arranged.

LOUD-SPEAKERS. By C. M. R. Balbi, pp. xv.+96 with 57 Figs. Pitman. Price 3s. 6d.

This is a popular non-mathematical but scientifically correct description of the principles and practice of loud-speaker construction and operation. All the various types are described and the important subjects of diaphragms and horn are discussed. The concluding chapter is entitled "Advice to intending purchasers" and there is a list extending to eleven pages of the principal loud-speakers on the market with notes and particulars of each type. This should prove very useful to intending purchasers.

STÖRBEFREIUNG IN DER DRAHTLOSEN NACHRICHTENÜBERMITTLUNG. [The Elimination of Interference in Wireless Telegraphy.] By M. Singlemann, pp. 151 and 239 Figs. Hermann Meusser, Berlin. Price 8.50 marks.

This forms volume 7 of a series on "Die Hochfrequenztechnick," edited by Dr. Carl Lubben. Only a few pages are devoted to the underlying principles, the greater part of the book consisting of diagrams of connections illustrating almost every receiving arrangement which has been devised, each diagram having a brief description of its principal points. Each section, such as Heterodyne Receivers, Directive Receivers, Elimination of Distortion, etc., etc., is introduced by a brief general description. To one familiar with the principles, the book offers a useful classified compilation of circuits. G.W.O.H.

DER DETEKTOR. By Dr. R. Lehnhardt, pp. 95 and 62 Figs. Hermann Meusser, Berlin. Price 5.80 marks.

This is volume 8 of the same series. The title should be "Detectors other than Thermionic Valves," since only 9 pages are devoted to these, against 67 pages on contact detectors, the remaining few pages dealing with sundry other types. In the few pages devoted to the thermionic valve, however, the author accomplishes a wonderful feat in developing the two-electrode valve without any mention of Prof. Fleming. A somewhat strange remark is that "the first grid tube was proposed by de Forest, but in Germany by v. Lieben."

Crystal detectors are dealt with fairly fully, both in theory and practice. A table is given of a great number of minerals with figures which are not defined, but which are probably the necessary applied electromotive forces to give good results. A final section deals with the use of a crystal as a generator of oscillations. A very good bibliography of the subject is given. G.W.O.H.

Modern Printing Telegraphy.

An attractive booklet with the above title has been received from Messrs. Creed & Co., Ltd., of Croydon. We need hardly say that the name of Creed is associated all over the world with progress and masterly achievement in the field of printing telegraphy. In the current number of the *Zeitschrift für Hochfrequenztechnik* we noticed with a touch of pride that the wireless transmitting and receiving rooms at the German Main Telegraph Offices in Berlin were equipped with Creed apparatus. Messrs. Creed & Co. have acquired the Murray Multiplex System which they now manufacture in addition to the Creed High-Speed Printing Telegraphs. The booklet gives illustrated descriptions of the various pieces of apparatus, such as keyboard perforators, transmitters, receivers, printers, relays, undulators, phonic motor distributors employed in one or both of the systems.

Proceedings of the Wireless Section of the Institute of Electrical Engineers.

As we announced in a recent number, the Council of the Institution decided to publish the papers read before the Wireless Section, separately from the main proceedings. Volume I., No. 1, has now been published and it is stated that there will be three issues yearly, viz., in March, June and September. The first number contains Major Benyon's address as President of the Section, "The Performance of Amplifiers," by H. A. Thomas, and "Frequency Variations in Thermionic Generators," by Lt.-Col. Edgeworth, together with the discussions which took place at the meetings.

Digitized by Google

Some Recent Patents. [R008

A PECULIAR RECEIVING CIRCUIT.

(*Convention date* (*U.S.A.*), 30*th June*, 1924. *No.* 236,156.)

A rather peculiar type of receiving circuit is described in the above British Patent by C. E. Ogden and P. V. Ogden. The object of the invention is to produce a receiver particularly suitable for portable use, when an aerial is not always practicable, signals being obtained by means of an earth connection. The accompanying illustration shows the circuit. It will be seen that an oscillatory circuit consists of a variable condenser C_1 and an inductance L connected between the anode and grid of a three electrode valve, the usual condenser C_2 being included.

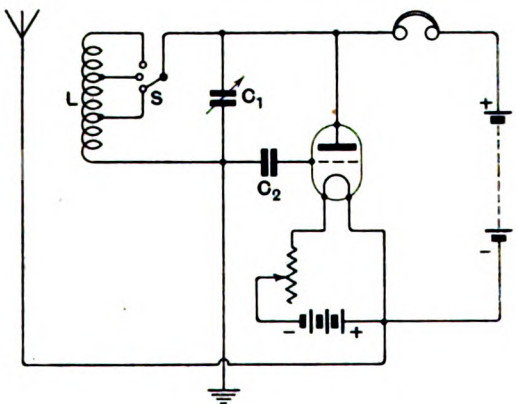

No grid-leak is shown and we presume that the valve is soft. The system is earthed at one side of the oscillatory circuit. The usual filament and anode batteries are provided, and telephones are included between the high tension battery and the anode. Reaction is controlled by means of the tapping switch S, which varies the amount of inductance in circuit, and also by controlling the filament temperature or emission. It is stated that the use of an aerial increases the strength of the signals, the aerial, if used, being connected to the filament.

REGENERATION CONTROL.

(*Application date*, 5*th January*, 1925. *No.* 248,876.)

The above British Patent, granted to H. Tyler, deals essentially with the control of reaction. It will be seen from the accompanying illustration that the aerial circuit is tuned by means of a variable condenser C_1, an inductance L_1, and a variometer M. Potentials are taken across the variometer M, and applied between the grid and filament of the valve, the usual grid condenser and leak being included. A coil L_2 is included in the anode circuit of the valve and is coupled into the inductance L_1. It is stated that the control of reaction is very smooth and not in the

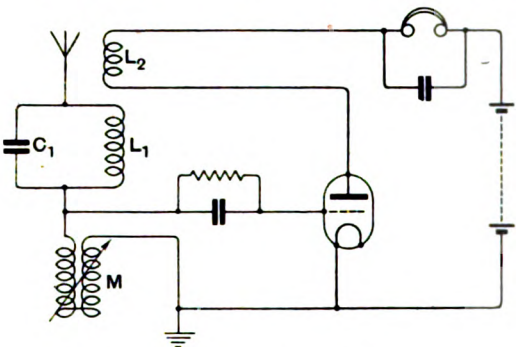

least critical. It is further stated that the circuit gives more volume than is obtained with the normal arrangement.

RADIO FREQUENCY TRANSFORMER CONSTRUCTION.

(*Convention date* (*France*), 21*st November*, 1924. *No.* 243,379.)

A rather interesting method of adjusting a transformer is described in the above British Patent, which is granted to the Société Française Radio-Electrique. The method of control is particularly applicable to supersonic intermediate transformers, in which a number having the same natural frequency are desired. Formerly, transformers have been adjusted subsequent to manufacture by varying the number of turns until the

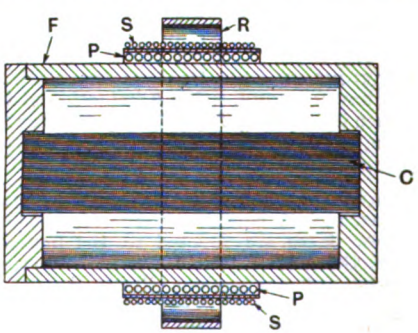

desired natural frequency is obtained. This elaborate method, however, is entirely obviated by the method of construction which is illustrated by the accompanying diagram. It will be seen that the transformer comprises two sets of windings

Digitized by Google

P and *S*, one wound upon the other on an insulating former *F*. The former contains an iron core *C*, comprising a large number of very fine wires, suitably annealed so as to have minimum losses. The core is arranged so that there is a very large air space between itself and the windings. The transformer is adjusted by means of a conducting ring *R*, which is capable of longitudinal movement with respect to the core and the windings. Thus it will be seen that the ring may be brought gradually into the flux, so that the flux which is embraced may be varied, and in this way a number of transformers may easily be matched.

THE R.I. TUNER.

(*Application date, 25th February*, 1925. *No.* 249,292.)

Some details of the R.I. tuner are described by W. A. Appleton and J. Joseph in the above British Specification. The tuner consists of a continuous winding on a cylindrical former with a small air space between the various sections, which are of increasing size. The inductance is tapped at each section, the tappings being brought to a multi-stud switch. In addition, a cylindrical reaction coil is mounted at one end of the cylinder, and is connected by a bevelled gear wheel to a controlling knob at the other end of the cylinder, which also carries the multi-contact switch. The switch arm is of the double type, that is, it is of sufficient area to embrace two studs at a time. Thus it will be seen that the section of the coil nearest to the one in use is short-circuited, and the switch is also connected so that the whole of the inductance out of circuit is also short-circuited.

A SAFETY LEAD-IN TUBE.

(*Application date, 20th April*, 1925. *No.* 248,590.)

P. J. Ambrose describes the construction of a safety lead-in tube. The lead-in is of the type comprising an insulating tube in which a rod carrying contacts is capable of being moved so as to connect either the aerial to the set or to earth. The particular form of lead-in is shown in the accompanying illustration, and consists of an insulating tube *S*, which is gripped by means of a nut *N* in a split threaded extension *E* of a flange plate *P*, which is screwed to the window frame or the wall. The tube carries at its external end a contact *C* and a terminal *T*, which communicates with the earth. A similar pair of contacts *K* are fixed at the internal end of the tube, and are provided with another terminal, which is connected to the receiver. A conducting rod *R* is provided with a knob *O* by means of which it is moved. The rod carries at either end fingers *F* and F_1, and at the external end a terminal to which the aerial lead is connected. Thus it will be seen that when the knob is pushed in, the fingers F_1 will touch the contacts *K*, thereby connecting the aerial lead to the set. When the knob is pulled out the fingers *F* will touch the contacts *C*, thereby connecting the aerial lead straight to earth, and at the same time disconnecting the set from the aerial lead. An additional feature of this invention is the provision of a spark gap on the side of the tube. The gap comprises the usual pair of serrated edges, one fixed to the contact ring *C*, and the other fixed to an extension at right angles to the rod. This extension works in a slot *Z* in the tube. Thus when the knob is

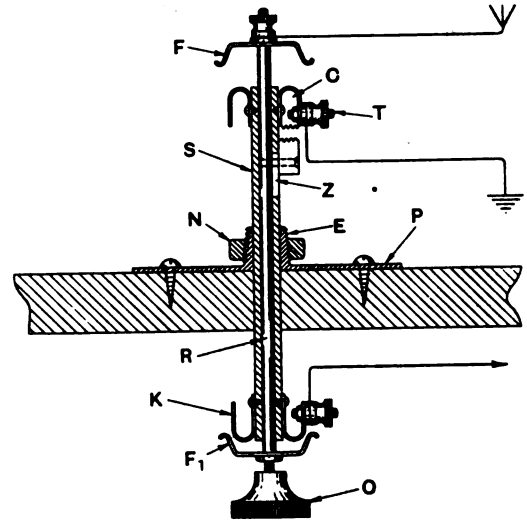

pulled out and the aerial is earthed there is a considerable distance between the gap, this helping to isolate the receiver from the aerial lead, but when the knob is pushed in and the set is connected to the aerial the movable element of the gap is brought into close proximity with the fixed element thereby acting as an efficient spark gap.

AN M.-L. INTERVALVE COUPLING.

(*Application date, 29th December*, 1924. *No.* 249,234.)

A very interesting form of intervalve coupling is described by the M.-L. Magneto Syndicate Limited and D. K. Morris, Ph.D., in the above British Patent. The object of the invention is

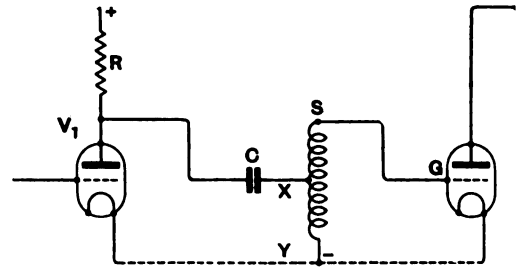

to produce a coupling device having the same efficiency as an ordinary intervalve transformer, but at the same time eliminating some of the inherent defects, particularly those due to saturation and hysteresis effects. The invention consists essentially in separating the direct anode

Digitized by Google

current component from an auto transformer, merely applying the alternating current potentials to the primary winding. The accompanying diagram should illustrate the principle, in which it will be seen that the anode circuit of the first valve V_1 contains a high resistance R. Alternating potentials are produced across this resistance, and are applied by means of a condenser C between the points X and Y, *i.e.*, the primary winding of an auto-coupled transformer. The high potential end of the secondary S is connected to the grid G of the second valve. Thus it will be seen that direct currents are confined to the anode circuit of the valve V_1, and only alternating currents are applied to the auto transformer. It will be obvious that the absence of the steady current from the primary windings of the transformer eliminates the possibility of distortion due to saturation and other similar troubles. The Patent Specification also gives details of the construction of a unit for this purpose, comprising a combination of resistance, a coupling condenser, and an auto transformer, the whole being contained within a suitable case, appropriate terminals being provided. The arrangement also enables the device to be used as an ordinary auto transformer and stopping condenser, or, if desired, an ordinary choke and a stopping condenser.

SUPERSONIC TRANSMISSION.

(*Application date, 20th December*, 1924. *No.* 248,868.)

A system of broadcast transmission designed to lessen the effects of interference is described by B. H. N. H. Hamilton and J. Robinson in the above British Patent. The ordinary method of supersonic reception consists in beating a local oscillation with the received signals so as to provide an intermediate beat frequency which is subsequently amplified and detected. According to this system, however, instead of introducing the local oscillation at the receiver another carrier wave is transmitted, so that the two are received simultaneously, and beat together, amplification being carried out at the intermediate beat frequency, after which the amplified currents are detected. One modification of the system consists in providing one high power main carrier wave, which is modulated, and providing a number of localised low power transmitting stations, which simply emit a carrier wave of such a frequency as to give the desired beat frequency in the receiver.

A SYSTEM OF ATMOSPHERIC ELIMINATION.

(*Convention date* (*France*), *30th November*, 1923. *No.* 225,570.)

L. Levy describes in the above British Patent a system of atmospheric elimination dependent upon the balancing out of currents due to undesired signals or atmospherics. The arrangement should be clearly understood by reference to the accompanying illustration, in which two receiving frames are shown associated with two valves having a common output. Two frames F and F_1 are connected to the grid circuits of valves V and V_1, and are tuned by condensers C and C_1, the grid circuits being coupled by inductances L and L_1 to inductances L_2 and L_3 respectively. The anode circuits of the valves V and V_1 respectively contain inductances L_4 and L_5, which in turn are coupled to inductances L_6 and L_7, the inductances L_2 and L_3 being connected in series with L_6 and L_7, and are tuned by a variable condenser C_3. Any potentials occurring in this tuned circuit are amplified at the points X and Y, *i.e.*, across the variable condenser C_3, and are subsequently rectified and further amplified if desired. The frame F is tuned by the condenser C to a wavelength slightly above that of the desired signal, while the frame F_1 is tuned to a wavelength slightly below that of the desired signal. It is stated that any atmospheric or similar parasitic shock excitations will cause equal and opposite currents to flow in the output circuit of L_6, L_7 and L_3, C_3, with the result that substantially no potential will occur across the points X and Y. When, however, oscillations due to the desired signals are received, *i.e.*, at frequencies intermediate between that to which the two frame

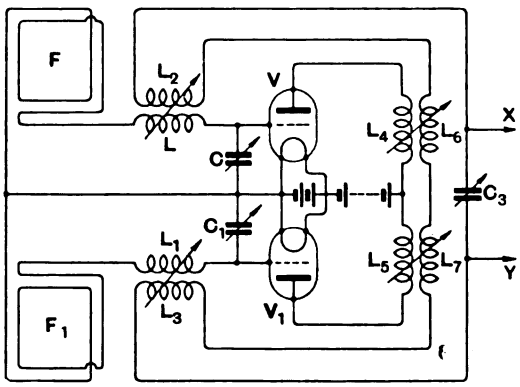

circuits are tuned, the current in one circuit will lead and the current in the other circuit will lag with reference to the voltage produced by the wave in the two circuits, and, consequently, there will be a phase difference between the potentials between the two grids and filaments. This means that opposition will not occur in the output circuit L_6, L_7, owing, of course, to the reactive coupling between L_2, L, L_3 and L_1, and it is further stated that the potential induced by the received signal tends to lead by ninety degrees. This results in phase opposition occurring between the two sets of grid potentials. Hence an appreciable voltage will be produced across the points X Y due to the received wave, which is then amplified and utilised without interference from any atmospherics.

CONSTANT BEAT FREQUENCY.

(*Convention date* (*Germany*), *15th November*, 1924. *No.* 243,018.)

Telefunken Gesellschaft fur Drahtlose Telegraphie M.B.H. claim in the above British Patent Specification an arrangement of two or more tuned circuits provided with a common tuning

Digitized by Google

adjustment, such that the frequency difference between two circuits is always constant. An arrangement of this description would be very useful in heterodyne or super-heterodyne circuits, where it is desired to adjust two tuned circuits with only one control, so that a constant beat frequency, for example, is obtained without the necessity of using a variable condenser of any special law.

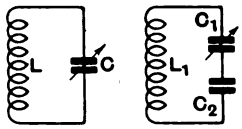

It will be seen that the two inductances L and L_1 are tuned respectively by variable condensers C and C_1, the variable condenser C_1 being in series with a fixed condenser C_2. It is found that by suitably proportioning the condensers C_1 and C_2, and inductances L_1 and L_2, rotation of the one control knob operating both condensers results in a constant frequency difference. The values of the components are such that the two variable condensers are of similar capacity, while the inductance L_1 is slightly smaller than the inductance L. The specification shows the mathematical justification of this relation, and indicates how actual values may be calculated.

ANOTHER VARIABLE GRID-LEAK.

(*Application date, 29th May,* 1925. *No.* 250,052.)

The construction of a variable grid-leak is described by W. P. Fraser in the above British Patent. The leak is of the type comprising a flexible high resistance conductor, part of which is short-circuited by coming into contact with a metallic

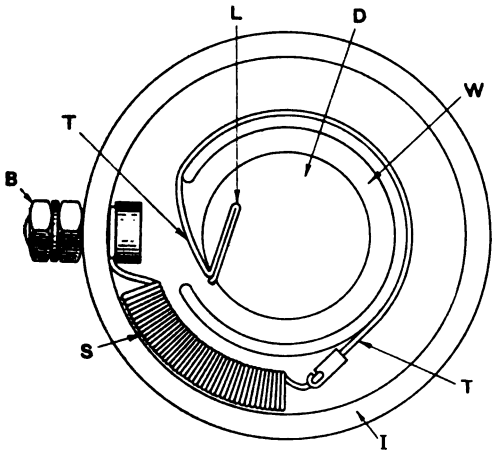

surface. Thus, in the accompanying illustration, which merely shows a plan view of such a resistance, the resistance element comprises a piece of tape T, treated with indian ink. One end of the ink conductor is connected to a helical spring S, provided with a terminal B. The other end of the tape is fixed in a small slot L, in a metallic drum. The insulating case I, which contains the device is also provided with a concentric insulating sleeve W, around which the tape passes. Thus it will be seen that on rotating the drum by means of a knob fixed to a shaft (not shown) the tape will be wound round the periphery of the drum, thereby short-circuiting a considerable portion of the resistance element, with a corresponding decrease in the total resistance in circuit. The other connection, of course, is made to the metallic drum.

MAINTAINING CONSTANT FREQUENCY.

(*Application date, 9th April,* 1925. *No.* 250,022.)

K. R. Edgeworth describes in the above British Patent Specification a method of maintaining constant frequency in an oscillating valve. It is stated in the specification that stray capacitative coupling between the grid and anode circuits of a valve, anode potentials, and filament emission all have a controlling influence upon the frequency of oscillation. The object of the invention is to

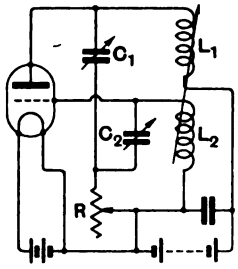

provide a form of coupling for the production of oscillations in which the frequency is maintained substantially constant. The invention consists in providing tuned anode and grid circuits, and including a common resistance in the two oscillatory circuits. Thus, in the accompanying illustration, a valve is provided with an anode oscillatory circuit consisting of an inductance L_1, and a capacity C_1, and a grid circuit comprising an inductance L_2, and a capacity C_2, the two circuits being coupled by a variable resistance R. The inductances L_1 and L_2 are also coupled together so as to produce a non-regenerative effect equal and opposite to that due to the inherent capacity coupling in the circuit. It is stated that the arrangement is exceedingly stable in operation.

A DOUBLE FILAMENT RECTIFYING VALVE.

(*Convention date* (*U.S.A.*), *18th July,* 1924. *No.* 237,233.)

The Dubilier Condenser Company (1925) Limited and H. W. Houck described in the above British Patent the construction of a multi-filament rectifying valve. The accompanying illustration shows a double filament valve suitable for full wave rectification of single phase current. It is well known that when a valve filament is heated electronic emission occurs, and the flow of electrons to the anode or plate can only take place when the

Digitized by Google

potential of the anode is positive with respect to the filament. This rectifying effect is well known, and is utilised in a particular valve in the following manner: The valve V containing the filaments F_1 and F_2, and anode A is used with a special

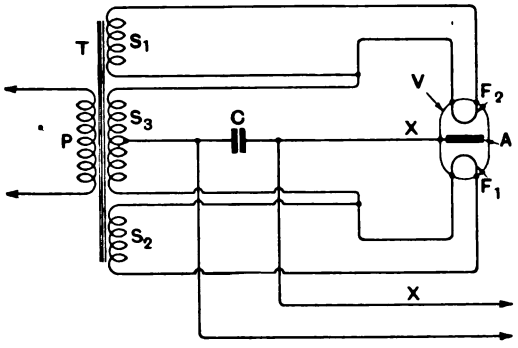

type of transformer T. The transformer is provided with a primary P. There are three secondary windings, S_1, S_2 and S_3; S_1 and S_2 are used to heat the filaments, and the centre tap winding S_3 is used to produce the high or low voltage current which is to be rectified. The two filament windings are connected respectively to the extremities of the centre tap secondary, the centre tap of the secondary being connected through the load circuit, shunted by a condenser C, to the anode A. When the filaments are energised, emission will occur, and when the potential of one filament is negative with respect to the other an electronic stream will pass from that filament to the anode. Since the potential of the other filament with respect to the anode is positive there will be no electronic stream. At the next half cycle the other filament will be negative with respect to the anode, while the former filament will be positive, with the result that an electronic stream will be established between the anode and the other filament, the current always returning to the anode along the same conductor X. In other words, a rectified current effect is obtained. An additional feature of the invention is the arrangement of the filaments so that any one filament is screened from the other filaments by the anode, thereby preventing an electronic short circuit between the filaments.

A FOUR-ELECTRODE VALVE CIRCUIT.

(*Convention date* (*France*), 15*th December*, 1923. *No.* 226,228.)

A four-electrode valve circuit including three coupled inductances is claimed in the above British Patent by the Compagnie Générale de Télégraphie sans Fil. The accompanying diagram illustrates the arrangement of the circuit. The four-electrode valve is of the usual type comprising filament, anode and inner and outer grids. The input circuit comprises a tuned circuit L_1 C_1, connected between the outer grid and the filament. The inner grid circuit includes an inductance L_2, which is given a certain positive potential with respect to the filament, while the anode circuit from which the output is taken at X Y includes an inductance L_3, the potential of the anode being positive with respect to the filament. The three inductances L_1, L_2 and L_3 are coupled together. The specification

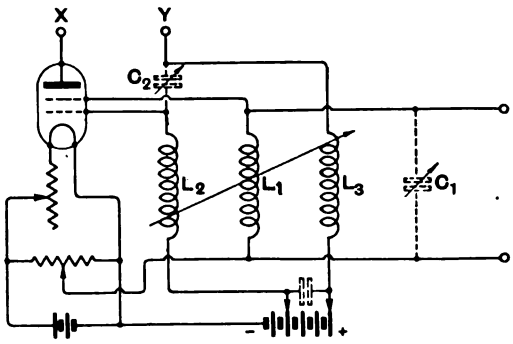

also provides for the inclusion of a variable condenser between the inner grid and the high potential end of the inductance L_3. It is stated that the amplification which is obtained with this arrangement is considerably greater than that derived from the more normal connections.

Digitized by Google

EXPERIMENTAL WIRELESS & The WIRELESS ENGINEER

VOL. III. JULY, 1926. No. 34.

Editorial.

Abstracts and References.

READERS will probably have noticed that in our last issue "Abstracts and References" formed a more important feature than in previous numbers. With the June number we initiated what we feel sure will prove a valuable extension of this section of *E.W. & W.E.* It is a difficult matter for a worker in any branch of modern science to keep himself informed on the work being done and published by other workers in the same branch. The difficulty increases year by year, and can only be overcome by a well organised system of Abstracts. The Department of Scientific and Industrial Research has for some time past prepared such an abstract of all the publications of scientific importance in the field of radio telegraphy and telephony for circulation among members of the Radio Research Board, and our readers will be pleased to learn that arrangements have been made whereby they will share in the benefits of this important service of references and abstracts. The abstracts will be published in *E.W. & W.E.* simultaneously with the distribution to the members of the Radio Research Board and will thus be available at the earliest possible moment after the publication of the original articles. The Radio Research Board has adopted the system of classification employed consistently in this journal, which has always proved very successful and is being continued. Although the space devoted to this feature has been increased, we feel convinced that every reader will agree that the value of *E.W. & W.E.* has been greatly enhanced by this innovation. It will enable the reader, on receiving his copy, to scan in half an hour the wireless publications of the previous month in whatever language they may have been published and to take steps to consult the originals of any articles which appear to be of special interest to him. We venture to assert that no wireless publication in any language offers its readers such a complete and prompt service of abstracts and references.

Esperanto.

AS the result of our *questionnaire* on this subject we found that many readers regarded the Esperanto section as a valuable feature of *E.W. & W.E.* and after considerable thought and discussion we decided that the most useful form that an Esperanto section could take would be a number of brief abstracts of the articles appearing in the previous issue. This will be of special service to those foreign readers who can read Esperanto but whose knowledge of English is not sufficient to enable them to gather the contents of an article by simply perusing the pages. Our readers will have noticed that the Esperanto section was resumed on these lines in the June issue.

Digitized by Google

Use of Plate Current—Plate Voltage Characteristics in Studying the Action of Valve Circuits.

By E. Green. [R131

WHEN studying the action of valves in various circuits the characteristics usually used are those showing the variation of plate current with grid volts (I_p—E_g characteristics), the plate volts being kept constant for any individual curve.

Captain H. J. Round has pointed out elsewhere that in many cases it is preferable to use characteristics showing the variation of plate current with plate voltage (I_p—E_p characteristics) at constant grid volts. The method of obtaining I_p—E_p characteristics from the I_p—E_g characteristics usually provided by the valve manufacturers, is given in a note at the end of this instalment.

Fig. 1 shows such I_p—E_p curves, (a) in an actual case, (b) in the ideal case of straight characteristics. Plate voltage and plate current will always be positive so that the whole series of curves are contained in one quadrant. The region to the left of the curve for $E_g=O$ will be a region where grid current occurs.

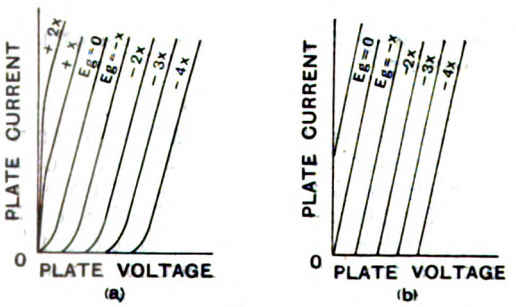

Fig. 1.

We can also draw I—E diagrams to represent the behaviour of different electrical circuits when a simple harmonic voltage is applied. These are shown in Fig. 2.

Case (A). *Pure Resistance.* $E=RI$ or $E/I=R$. E and I are in phase. Hence a straight line $R'OR$ (Fig. 2*a*) where $\cot\theta=E/I=R$ will show the relation between E and I at all points of the cycle. OM=maximum value of E, and ON=maximum value of I.

$\therefore$ Power $= \frac{1}{2}IE =$ Area of triangle OMR.

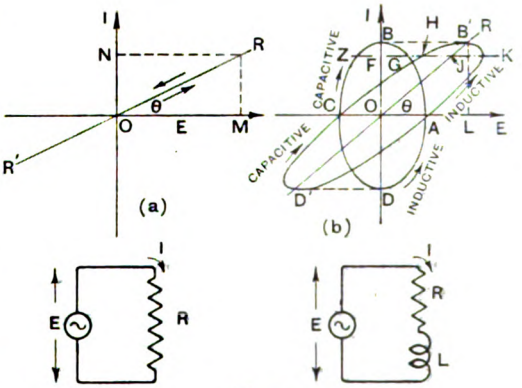

Fig. 2.

Case (B). *Pure Inductance.* $E=L\omega I$ but I lags 90° behind E. The locus is composed of two simple harmonic motions at right angles and in quadrature. This locus is an ellipse $ABCD$ traversed in the counter-clockwise direction, as this makes the maximum of I lag 90° behind that of E.

Case (C). Similarly the locus for a pure capacity load ($I=E/C\omega$) is an ellipse such as $ADCB$ traversed in the clockwise direction.

Case (D). *Resistance and Reactance in Series.* In Fig. 2*b* let OR be the line for the resistance alone and $ABCD$ the ellipse for the inductance alone.

At the instants represented by the current OF, the voltage across the resistance is FJ and that across the inductance either FG or FZ according as the current is increasing or decreasing. Hence the resultant voltage is obtained by adding these voltages and is either FH or FK where

$$JH = FZ \text{ and } JK = FG.$$

Digitized by Google

Hence the locus of I and E for resistance and inductance in series is the ellipse $AB'CD'$ obtained by shearing the ellipse $ABCD$ so that OB comes into the position OR.

Similarly if we have resistance and capacity in series the locus is an ellipse such as $AD'CB'$ traversed in the clockwise direction.

B' and D' are the highest and lowest points of the ellipse.

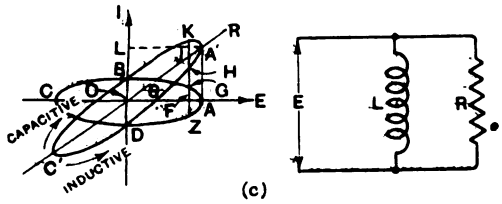

Fig. 2.

If $B'OL = \theta$, $\cot\theta = R$ the resistance of the circuit whilst $OA = X$. I where X is the reactance, OL = maximum volts on resistance, LB' = maximum current.

Power $= \frac{1}{2} OL \,.\, LB' =$ Area triangle OLB'.

Case (E). *Resistance and Reactance in Parallel.* This is shown in Fig. 2c. As before, the current through the resistance alone is represented by the line OR, whilst that through the reactance alone is represented by the ellipse $ABCD$. If we add these two currents together for any particular value of E we shall get the resultant current. Thus for voltage OF, the current in the resistance is FJ, whilst that in the reactance is FG or FZ. Hence the resultant current is either FH or FK where,

$$JH = FZ \text{ and } JK = FG.$$

Hence the locus of the relation between I and E for resistance and reactance in parallel is the ellipse $A'BC'D$ obtained by shearing the ellipse $ABCD$ so that OA comes into the position OR. A' and C' will be the points of the ellipse most distant from OI. Then if $A'OE = \theta$, $\cot\theta = R$, the resistance of the circuit, whilst

OB = maximum current in reactance.
AA' = maximum current in resistance.
OA = maximum voltage across resistance.

$\therefore$ Power supplied to circuit $= \frac{1}{2} OA.AA'$
= Area of triangle OAA'

The diagram for any combination of resistances and reactances in series and parallel can be obtained by a series of such steps as are outlined above.

If then we have a valve operating with a certain external load, we can combine the characteristics of the valve with that of the load to show the behaviour of the combination.

Take the circuit of Fig. 3a where the load in the plate circuit is a non-inductive resistance R_e.

In Fig. 3b, let

E_o = voltage of H.T. supply,

and for any particular value of grid voltage E_g,

I_p = plate current,
and E_p = voltage on plate.

Then if the grid volts are adjusted so that the current through the valve is zero, there will be no drop in voltage in R_e, and the voltage on the plate will be E_o the full H.T. battery voltage. Hence in Fig. 3b if $OA = E_o$, A represents the working point for these conditions. Now if the grid volts are altered, so that a current I_p flows through R_e and the plate filament circuit, there will be a drop in volts across $R_e = R_e I_p$, and the volts on the plate are reduced by this amount. The plate voltage is now therefore $E_o - R_e I_p$. The new working point D is obtained as

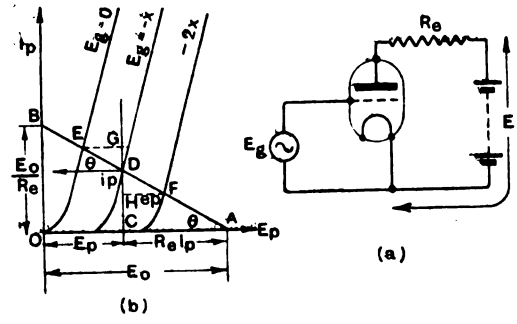

Fig. 3.

follows: Make $AC = R_e I_p$ and CD perpendicular to AC, and equal to I_p. Also,

since $$\cot\theta = \frac{CA}{CD} = \frac{R_e I_p}{I_p} = R_e$$

θ is independent of I_p, and therefore as E_g is varied, the working point will move along the line drawn through A and D. This is true whatever the law of variation of E_g.

Digitized by Google

We can express this more shortly thus, H.T. volts = volts on plate + volts drop in external load,

or, $E_o = E_p + R_e I_p$

$$E_o - E_p = R_e I_p$$

$$\frac{E_o - E_p}{R_e} = I_p$$ for any particular grid voltage E_g.

Hence the relation between E_p and I_p for varying values of E_g is given by a straight line. In particular for

$I_p = O$ we have $E_p = E_o = OA$

$E_p = O$ we have $I_p = E_e/R_e = OB$

The line AB is the locus showing the relation of E_p and I_p when E_g is varied in any manner. Its slope is given by

$$\cot\theta = \frac{OA}{OB} = E_o \Big/ \frac{E_o}{R_e} = R_e$$

If the grid has a steady voltage of $-x$, D is the working point and DC is perpendicular to OX,

$OC = E_p$ plate volts

and $CA = E_o - E_p$ = voltage drop across R_e

Power lost in valve $= E_p I_p = OC \,.\, CD$

Power lost in load $R_e = R_e I_p^2 = CA \,.\, CD$

Now let a sinusoidal voltage be applied to the grid and let e_p, i_p be the instantaneous values of the changes in plate voltage and current. We can see from the above that the working line will be along ADB.

Working it out in detail we have,

$$E_o - (E_p + e_p) = R_e (I_p + i_p)$$

whence by subtraction,

$$-e_p = R_e i_p$$

This is the relation shown on the simple $I - E$ diagram for a non-inductive resistance, except for the minus sign which indicates that the positive direction for voltage across R_e is opposite to that for the plate. The positive directions for applied voltage and current for R_e are shown by the arrow lines through D, the mean position.

This line ADB is entirely a characteristic of the external circuit and not of the valve itself. In particular it will be straight even if the valve characteristics are curved; though in this case the excursions on either side of D for a sinusoidal voltage on the grid will not be equal and there will be rectification and distortion.

As in the ordinary $I - E$ diagrams for a resistance,

$$\cot\theta = \frac{-e_p}{i_p} = R_e$$

If the voltage applied to the grid carries the valve over the working range EDF the amplitude of the voltage variation on R_e is $e_p = HF$ or GE (Fig. 3) and of current variations in R_e is $i_p = DH$ or DG.

Hence AC power in $R_e = \frac{1}{2} e_p i_p = \frac{1}{2} DH \,.\, HF$ = area of triangle DHF.

This power is in addition to the direct current power loss in R_e. And since the mean value of I_p is unchanged, the total power from H.T. supply is unchanged. Hence the loss in the valve is diminished by the amount

$$\tfrac{1}{2} e_p \,.\, i_p = \text{triangle } DHF.$$

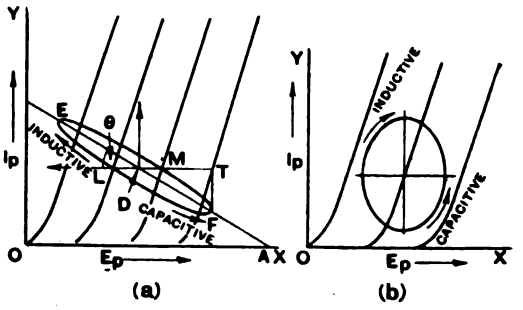

Fig. 4.

If the external load comprises resistance and inductance in series the equation showing the relation of the changes in e_p and i_p becomes,

$$-e_e = R_e i_p + L\frac{d\,i_p}{dt}$$

which, except for the minus sign, is the ordinary AC relation between voltage and current. Hence the locus showing the behaviour of the combination is an ellipse $EMFL$ (Fig. 4a) traversed in the clockwise direction. The shape and slope of this ellipse is entirely a characteristic of the external circuit, provided it lies in the region where the valve characteristics are straight. We can look at this from a rather different point of view. From the ordinary $I - E$ diagram, we know that such an ellipse represents the relation that must exist between an alternating (sinusoidal) current in the load circuit and the alternating voltage at its terminals. This ellipse, when

Digitized by Google

placed in position on the valve characteristics, shows what excursions of grid voltage are required to produce it. So long as the ellipse lies wholly in the region of the straight and evenly spaced characteristics, it will be seen that a sinusoidal grid voltage is required. But if the ellipse enters the region of curved characteristics it cannot be produced by a sinusoidal grid voltage. That is, a sinusoidal voltage on the grid will not produce a sinusoidal current in the load circuit. There is rectification and distortion. The position of the ellipse on the valve characteristics will be fixed by the grid and high tension voltages. If E and F are the highest and lowest points $\cot\theta = Re$ and $LD = DM = L\,\omega\, i_p\, max.$

If the load is capacitive the locus is a similar ellipse traversed in the counter-clockwise direction.

In either case the AC power in the load $= \frac{1}{2}\, DT\,.\,TF =$ area of triangle DTF.

If $R_t = O$ the ellipse takes the position shown in Fig. 4*b*.

We shall however restrict the investigation to cases where the load is equivalent to a resistance. This is the condition usually aimed at in practice, and the modifications required if it is not fulfilled have been indicated.

We return therefore to the simple resistance circuit of Fig. 3*a*.

Maximum Output and Efficiency.

Still keeping E_o and R_t fixed, and with no limitations as to grid current, and restricting ourselves to sinusoidal conditions, it is clear that the AC power output will be a maximum when the working range extends from A to B, Fig. 3*b*. To secure this with ideal characteristics, the grid bias should make D the mean position, the mid point of AB. (See Fig. 5.)

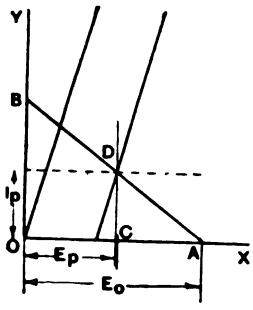

Fig. 5.

$$OC = CA = \frac{E_o}{2}$$

Then from the figure,

Total power supplied $= E_o\, I_p =$ area $OA.\,CD$.

Arith: mean volts on $R_t = CA = \frac{E_o}{2}$

D.C. power in $R_t = \frac{E_o}{2} I_p =$ area $C\,A.\,C\,D$.

A.C. power in $R_t = \frac{1}{2}\, C\,A.\;C\,D = \frac{1}{4}\, E_o\, I_p$

Overall efficiency $= \frac{\frac{1}{4}\, E_o\, I_p}{E_o\, I_p} = \underline{25\%}$

Power loss in valve $= \frac{1}{2}\, E_o I_p - \frac{1}{4}\, E_o I_p$
$= \frac{1}{4}\, E_o\, I_p =$ A.C. output.

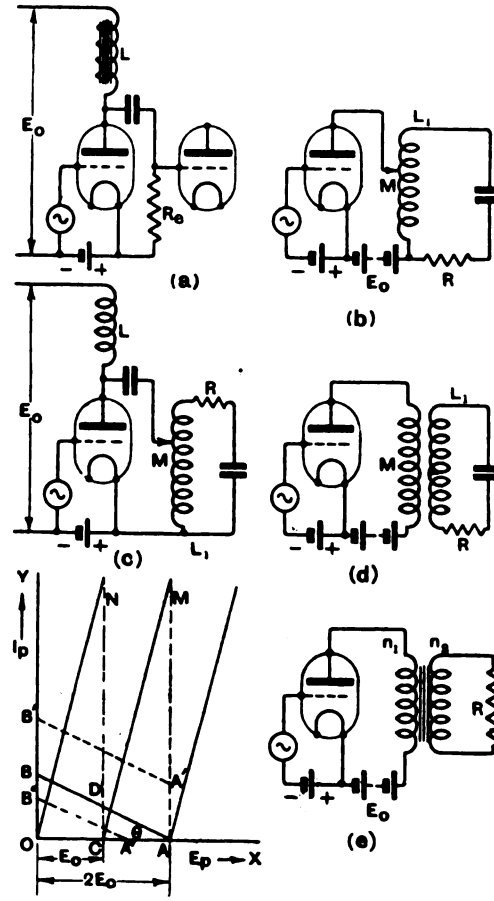

Fig. 6.

By avoiding the direct current loss in R_t we can bring up the overall efficiency to 50 per cent.

This can be done by circuits of the type shown in Fig. 6 (*a*), (*b*), (*c*), (*d*) and (*e*).

Digitized by Google

All these with proper adjustments will behave as a resistance load. In (*a*) and (*c*) L must be a choke with an impedance (at the frequency concerned) large compared with R_e.

In (*b*), (*c*) and (*d*) when the circuit is in resonance the equivalent resistance is

$$R_e = \frac{M^2\,\omega^2}{R}$$

In (*e*) $$R_e = R.\left(\frac{n_1}{n_2}\right)^2$$

In all these cases the mean plate voltage is E_o, the H.T. battery voltage, since there is no D.C. voltage drop in the load. In particular in (*e*) the resistance of the transformer primary will be small compared with R_o for the valve. As the instantaneous

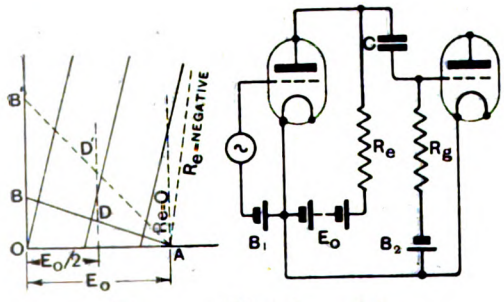

(a) Fig. 7. (b)

plate voltage will not usually drop absolutely to zero the maximum possible variation in plate voltage without distortion is less than E_c, and the maximum instantaneous value of plate voltage is less than $2E_o$.

Hence in Fig. 6 if $OA = 2E_o$ the working line cannot extend beyond AM. Also the slope of the working line must be given by $\tan\,\theta = i_p/e_p = 1/R_e$. (The detailed proof of this is left to the reader.) According to the grid bias it will be a line such as AB or $A'B'$ or $A''B''$. The best line however will be AB as involving the minimum power input for maximum output. We have for the line AB, when working over the whole range A to B.

Power input $= E_oI_p. = CA.\,CD$
A.C. power in load $= \frac{1}{2}\,CA.\,CD = \frac{1}{2}\,E_oI_p.$
Loss in valve $= \frac{1}{2}\,E_oI_p.$
Efficiency = 50 per cent.

The mean position of the working line must always lie on CN (where $OC = E_o$) which cuts AB at D its midpoint. Note also that, so far, no restrictions have been placed on the value of R_e and therefore the above efficiencies can be obtained for any value of R_e.

Variation in R_e. The slope of the working line is given by $\tan\,\theta = i_p/e_p = 1/R_e$. (See Fig. 7.)

When $R_e = O$ the line is vertical.
,, $R_e = \infty$ the line is horizontal.
,, R_e is negative the line slopes in the other direction.

Returning to circuit shown in Fig. 7*b*, we saw that so long as E_o is fixed the working line will always pass through A (where $OA = E_o$) for any value of grid bias.

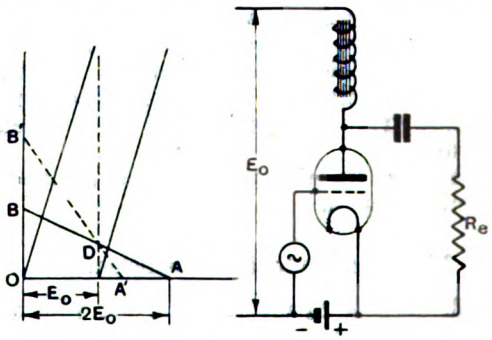

(a) Fig. 8. (b)

For the other type of circuit (Fig. 8*b*) altering R_e does not change the conditions in the valve so long as there is no alternating voltage on the grid. Hence in Fig. 8 when R_e only is altered the working line will swing about D, and the grid bias would have to be altered to make the working line pass through A.

(*To be concluded.*)

Digitized by Google

Harmonics and their Effects on Wave Form.

By J. F. Herd, A.M.I.E.E., M.I.R.E. **[R110**

THE existence of harmonics accompanying a fundamental oscillation, electrical or mechanical, is very well known, but the exact effect which these harmonics have in influencing the final shape of the wave representing the oscillation is usually a matter of much less attention. It is only when oscillographic study renders the presence of harmonics obvious—frequently in circumstances where they are not desired—that their effect on wave shape renders a knowledge of their properties desirable.

It is true that any curve containing fundamental and harmonics is capable of being represented by an appropriate Fourier series, but it is equally true that such a series is, to most minds, much inferior to a graphical representation in assisting the formation of a mental picture as to the effect of the harmonic terms. On the other hand, the accurate drawing of a series of sine curves and harmonics is admittedly a tedious matter, and as a result is frequently omitted when it might be advantageous and illuminating.

In this article it is proposed to illustrate a few typical cases of the effect of harmonics by the graphical process of drawing one complete cycle of the fundamental, together with the harmonic or harmonics stated in each case. The resultant wave form is then obtained by their algebraic addition. Since the resultant depends upon both the amplitude and the phase of the harmonics present, it is obviously impossible to deal with anything but the smallest fraction of what might well be encountered in practice. The cases illustrated may serve, however, to form a rough guide as to the effect of the chief harmonics. The last four cases especially show the ultimate approximation of some useful Fourier series.

The fundamental wave is throughout shown by light continuous lines, the harmonics by dotted lines, and the resultant by heavy continuous lines. Considerable uncertainty appears still to exist as to the naming of harmonics—*e.g.*, one finds a harmonic of twice the fundamental frequency referred to variously as the first or as the second harmonic. The tendency is, however—especially in wireless practice—more generally towards calling this the *second* harmonic, so that a harmonic of n times the fundamental frequency would be called the nth harmonic. This practice will be adopted here.

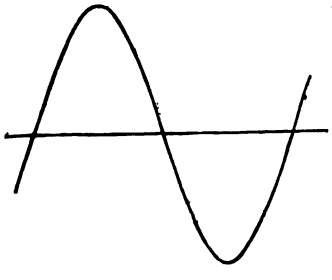

Fig. 1.
$y=a \sin x.$

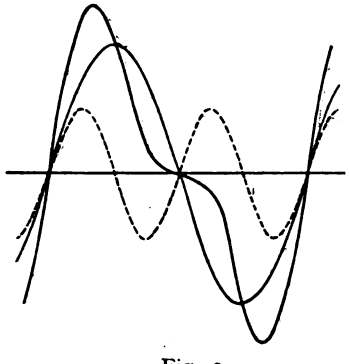

Fig. 2.
$y=a \sin x+\frac{a}{2} \sin 2x.$

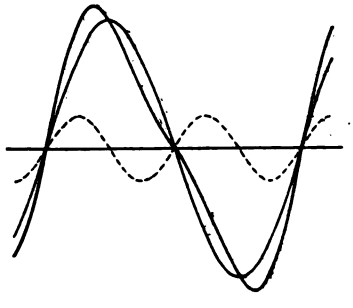

Fig. 3.
$y=a \sin x+\frac{a}{4} \sin 2x.$

In Fig. 1 is shown a simple sine curve. This has the equation

$$y=a \sin x$$

where a is the amplitude attained at the maximum of the half cycle and $x=2\pi ft$, where f is the frequency.

Fig. 2 shows the addition of a harmonic of twice the frequency and half the amplitude of the fundamental, *i.e.*, the function

$$y=a \sin x+\frac{a}{2} \sin 2x.$$

Digitized by Google

The distortion from sine wave purity is very pronounced. Figs. 2, 3 and 4 together show the effect which the amplitude of this same harmonic has on the resultant wave shape, in Fig. 3 the harmonic being one-quarter, and in Fig. 4 three-quarters the amplitude of the fundamental. From these the effect of intermediate amplitudes or even of an amplitude equal to that of the fundamental can readily be deduced. In passing it may be noted that such a harmonic amplitude is not beyond the bounds of possibility or of practical experience.

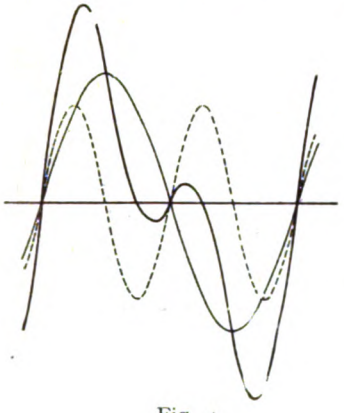

Fig. 4.
$y = a \sin x + \frac{3a}{4} \sin 2x.$

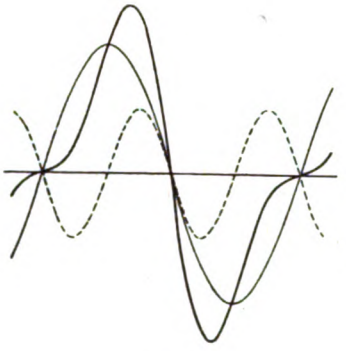

Fig. 5.
$y = a \sin x - \frac{a}{2} \sin 2x.$

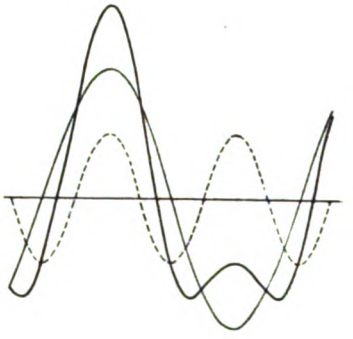

Fig. 6.
$y = a \sin x + \frac{a}{2} \sin 2 \left(x - \frac{\pi}{4}\right).$

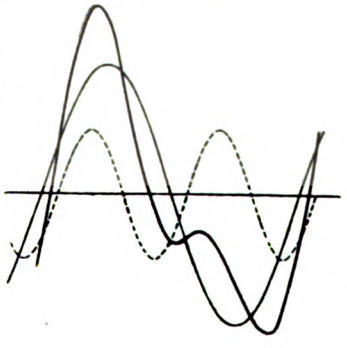

Fig. 7.
$y = a \sin x + \frac{a}{2} \sin 2\left(x - \frac{\pi}{8}\right).$

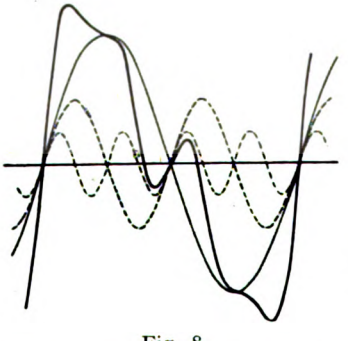

Fig. 8.
$y = a \sin x + \frac{a}{2} \sin 2x + \frac{a}{4} \sin 4x.$

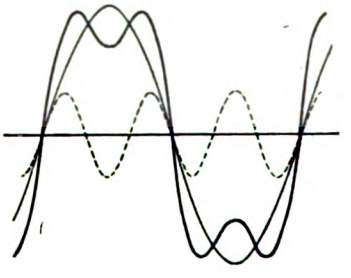

Fig. 9.
$y = a \sin x + \frac{a}{3} \sin 3x.$

In Figs. 2, 3 and 4 the phase of the harmonic has remained constant with respect to that of the fundamental. Figs. 2, 5, 6 and 7 together show the effect of varying this phase while the amplitude remains constant at $a/2$. In Fig. 5 the harmonic is anti-phased as compared with Fig. 2, and the effect of reversing the incidence of the "peaky" side of each half cycle is very noticeable. Fig. 6 shows the case of a harmonic shifted 90° from that of either Figs. 2 or 5 (*i.e.*, 45° or $\pi/4$ radians with respect to the phase of the fundamental). Here it is seen that while each half wave is itself symmetrical, the two half waves are quite different from each other in appearance.

From these curves it is obvious that the effect of a harmonic of $2f$, or, more generally, of an even multiple harmonic is to cause either a marked asymmetry of each half cycle or a marked dissimilarity between the half cycles. A more randomly chosen phase relation may indeed do both. This is shown in Fig. 7, where the harmonic has the phase of $22\frac{1}{2}°$, or $\pi/8$ radians with respect to the fundamental.

Digitized by Google

The asymmetry of the half cycles is still clearer in Fig. 8, which shows the addition of the next even harmonic, that of frequency $4f$, and amplitude shown as $a/4$.

Fig. 9 illustrates the combination of the fundamental and a harmonic of frequency $3f$ and amplitude $a/3$, beginning in phase with the fundamental. It is now very noticeable that the half cycles are each symmetrical and mutually similar. There is also evident the beginning of a flat top, referred to later.

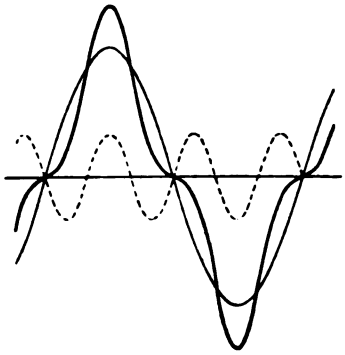

Fig. 10.

$y = a \sin x - \frac{a}{3} \sin 3x.$

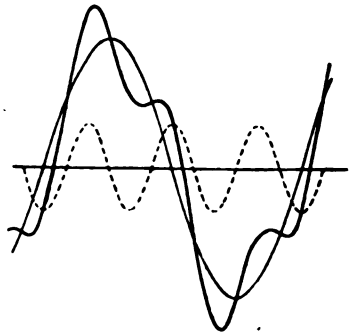

Fig. 11.

$y = a \sin x + \frac{a}{3} \sin 3\left(x - \frac{\pi}{6}\right).$

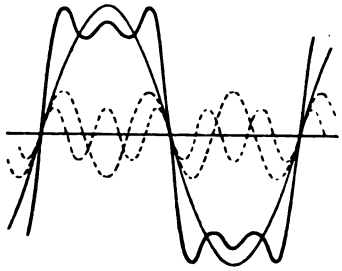

Fig. 12.

$y = a \sin x + \frac{a}{3} \sin 3x + \frac{a}{5} \sin 5x.$

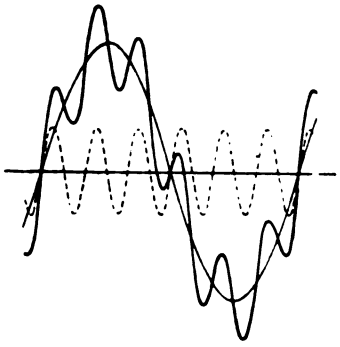

Fig. 13.

$y = a \sin x + \frac{a}{3} \sin 6x.$

Fig. 10 shows the effect of reversal of the phase of this harmonic, the half cycles still being symmetrical and mutually similar.

In Fig. 11 the harmonic is displaced 90° from those of Figs. 9 and 10, *i.e.*, 30° or $\pi/6$ radians with respect to the fundamental. It will now be observed that although the half cycles are no longer symmetrical they are still exactly similar to each other, in that the peaky portion occurs first in each (*cf.* the different incidence of Figs. 2 and 5 and the even multiples generally). Such similarity of the incident order of detail in the half cycles would be found still to exist even with any randomly chosen phase relation, although, of course, the actual shape would differ from that actually illustrated, according to the phase. This is indeed true of ***all the odd multiple harmonics***, $3f$, $5f$, etc., and the consequent similarity of the half cycles in such cases is of some importance in the work of making a Fourier analysis of a wave.

Fig. 12 combines a harmonic of frequency $5f$ and amplitude $a/5$ with the case of Fig. 9, and shows the still further development of the flat top, the half cycles still remaining symmetrical and similar.

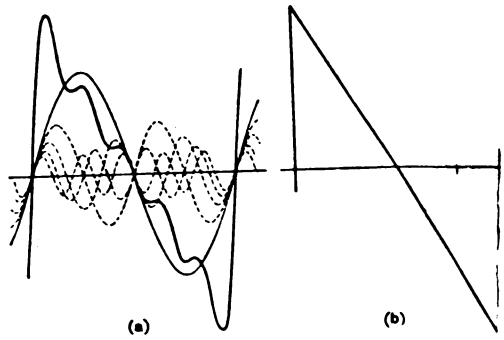

Fig. 14.

$y = a \sin x + \frac{a}{2} \sin 2x + \frac{a}{3} \sin 3x + \frac{a}{4} \sin 4x + \frac{a}{5} \sin 5x$

Ultimate approximation.

Digitized by Google

Since 6 is a multiple of 2 and of 3, it is to be expected that a harmonic of $6f$ will partake of the qualities of both $2f$ and $3f$. In Fig. 13 is shown the combination of a

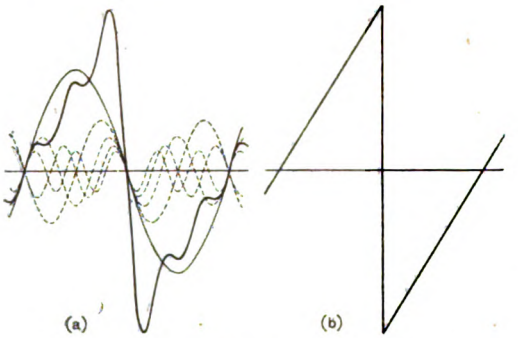

Fig 15.

$y = a \sin x - \frac{a}{2} \sin 2x$ *Ultimate approximation.*

$+\frac{a}{3} \sin 3x - \frac{a}{4} \sin 4x + \frac{a}{5} \sin 5x.$

fundamental and harmonic of frequency $6f$ and amplitude $a/3$, when it is seen that although the second multiple effect is producing asymmetry, the influence of the third multiple is still traceable.

Examples of the effects of harmonics cannot be better concluded than by considering the effect of a few well-known Fourier series and the approximations toward which they tend if carried far enough.

Fig. 14 (a) shows the function

$$y = a \sin x + a/2 \sin 2x + a/3 \sin 3x + a/4 \sin 4x + a/5 \sin 5x \ . \ . \text{ etc.}$$

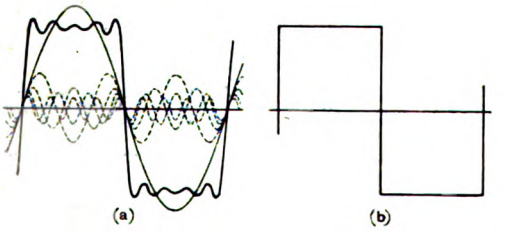

Fig. 16.

$y = a \sin x + \frac{a}{3} \sin 3x$ *Ultimate approximation.*

$+\frac{a}{5} \sin 5x + \frac{a}{7} \sin 7x + \frac{a}{9} \sin 9x.$

graphed up to the term $5x$, while (b) shows the ultimate form to which the series approximates, the continued addition of further terms tending to smooth the rippled structure which is still strongly evident in (a).

Fig. 15 illustrates the case of the same series with the even terms reversed in sign.

Fig. 16 is of very considerable wireless interest. It represents the Fourier series:—

$$y = a \sin x + a/3 \sin 3x + a/5 \sin 5x + a/7 \sin 7x + a/9 \sin 9x \ . \ . \text{ etc.}$$

up to the term $9x$. It is very evident that the waves is approaching still more closely to the flat-topped form already apparent in Figs. 9 and 12. The continued smoothing of the top by the addition of further terms of the series would ultimately give the approximation of Fig. 16 (b).

Fig. 17 is possibly of less wireless importance but is still of considerable mathematical and physical interest. It shows the series

$$y = a \sin x - a/3^2 \sin 3x + a/5^2 \sin 5x - a/7^2 \sin 7x + a/9^2 \sin 9x, \text{ etc.}$$

drawn to the term $9x$. The reversal of the phase of alternate terms gives a very different form from that of Fig. 16, while the diminished amplitude of the harmonic terms is

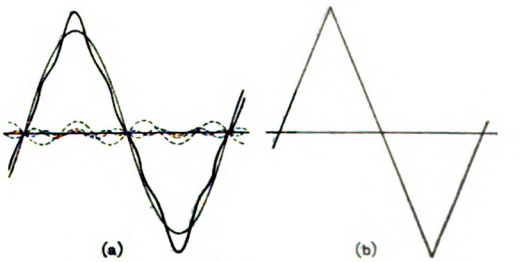

Fig. 17.

noticeable in tending to the more rapid smoothing towards the final approximation of Fig. 17 (b).

While it is not thought that the comparatively few cases illustrated here can serve as a general guide to such an extensive subject as harmonics, it is hoped that these graphs may prove useful in familiarising the wireless experimenter with some of the more prominent cases likely to be encountered. In particular, they may serve at some time to render unnecessary the Fourier analysis of a suspect wave form—a process which, although mathematically simple, is perhaps even more tedious to the busy man than the construction of the graphs.

Digitized by Google

Germany's High-Power Broadcast Station.

Königswusterhausen, Berlin.* [R616.5

THE principal German broadcast station is situated at Königswusterhausen, 20 miles south-east of Berlin. It is a high-power station which can be received with ease anywhere in Europe. In the afternoon it transmits a programme of scientific and educational lectures, and in the evening an entertainment programme.

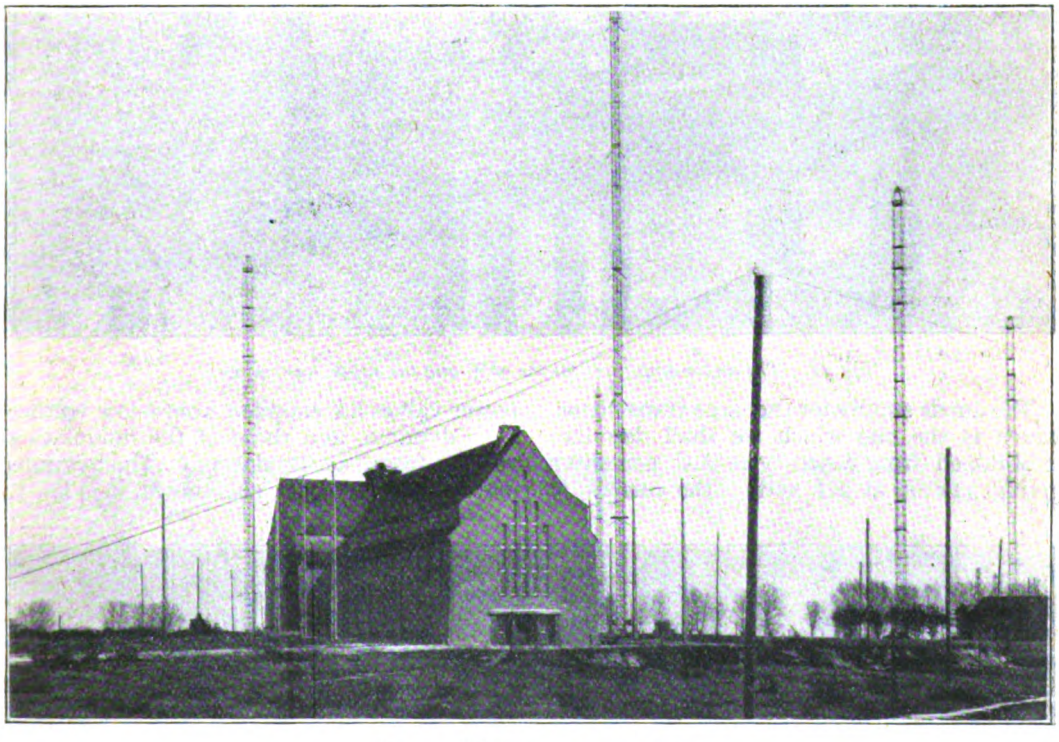

Fig. 1. *The transmitting station.*

Königswusterhausen is the wireless transmitting headquarters of the German Post Office, but the broadcast transmitters are housed in a special building (Fig. 1). There are three separate transmitters, one of 14 and two of 7 kilowatt, these being the powers supplied to the valves in the absence of modulation. This is the method of stating the power of a station agreed upon at the international conference at Geneva. When being modulated the average power is only about half this value. The whole equipment has been supplied by the Telefunken Company.

The rectifiers, high frequency valves and circuits are placed behind the switchboard shown in Fig. 4. The three marble panels on the right belong to one of the 7-kilowatt sets, the next three to the other 7-kilowatt set, whilst the panels of the 14-kilowatt set can be seen at the far end; the latter are shown in detail in Fig. 5.

The telephone currents on their arrival

* From material supplied by the Telefunken Company. We are also indebted to the Telefunken Company for the photographs which illustrate the article.

Digitized by Google

by cable from Berlin are amplified on the apparatus shown in Fig. 2; there are three similar sets, one for each of the transmitters.

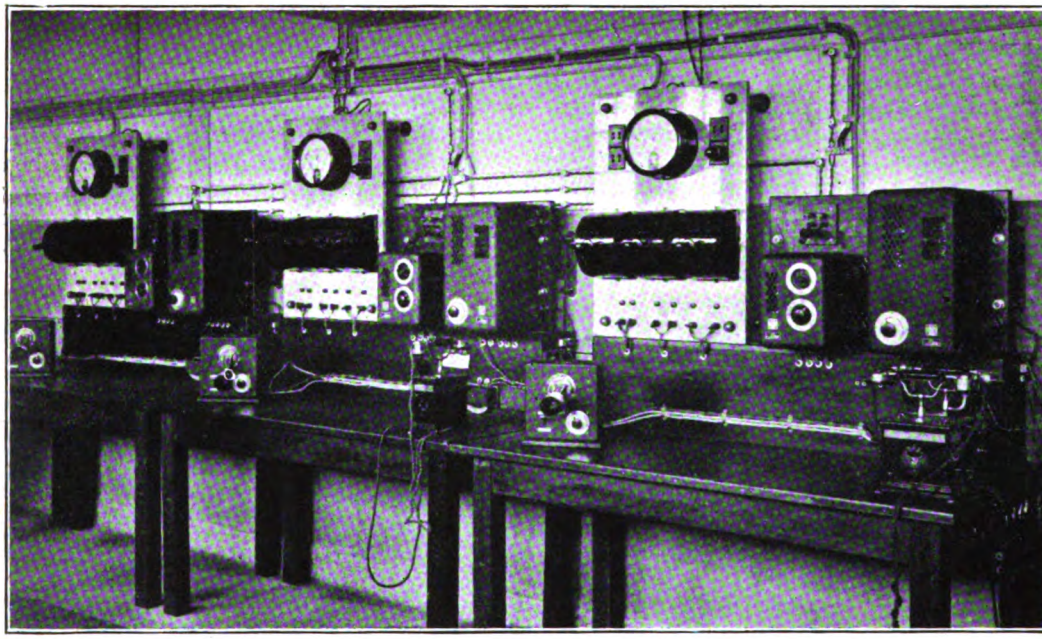

Fig. 2. *The audio-amplifiers for the 7kW and the 14kW transmitters.*

The anode supply for the large transmitter, which is the one which we shall describe, is obtained from a 500-cycle A.C. generator giving 42kVA at 220 volts; the current is transformed to a high voltage and rectified. The filaments of the rectifiers are heated by 500-cycle alternating current supplied by a 10kVA generator, but the filaments of the power valves are supplied from a low voltage D.C. dynamo, and those of the modulating valves from accumulators. The various motor-generator sets are shown in Fig. 3.

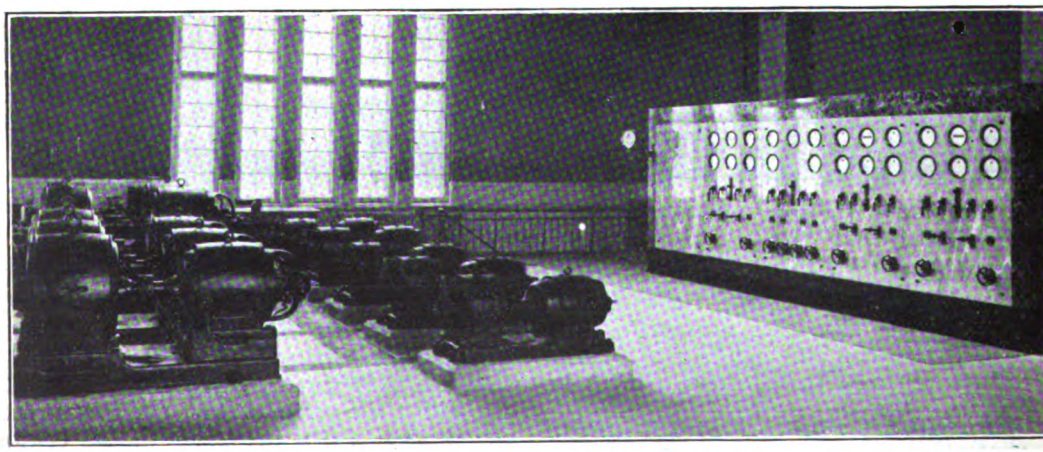

Fig. 3. *Machine room.*

Digitized by Google

The transmitter consists of four parts :—

1. The independent oscillator.
2. The rectifiers and power valves.
3. The intermediate circuit in the anode circuit of the power valves.
4. The antenna tuning coil.

The necessary switches and instruments are mounted on marble panels on a switchboard (Fig. 5) placed in front of the set.

The independent oscillator is shown in Fig. 6; its connections can be seen from Fig. 10; its valve of Type RS47 has an output of 1 kilowatt at an anode voltage of 10,000 volts. Behind the same panel (Fig. 6)

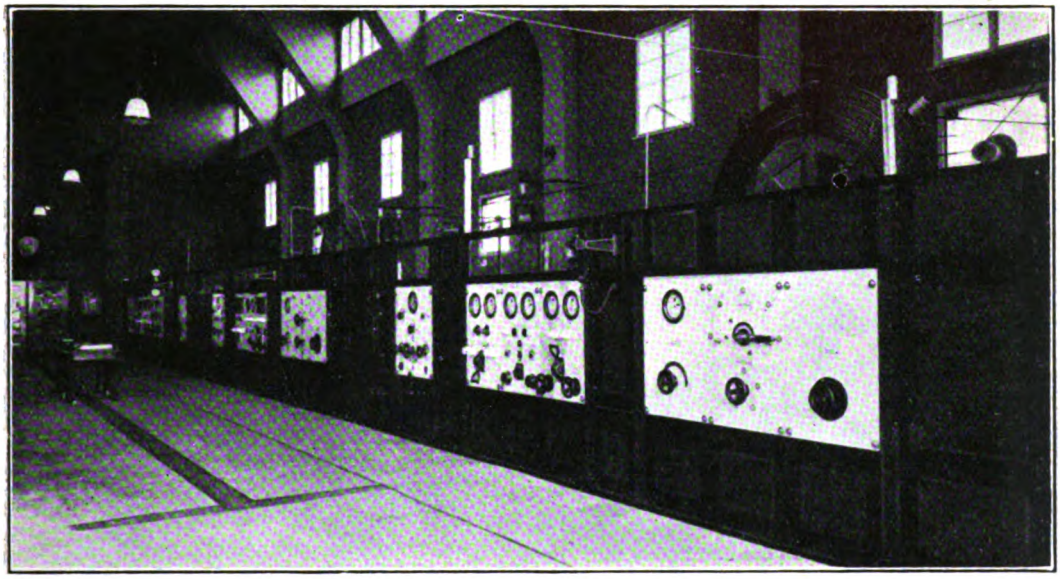

Fig. 4. *Panels of the three transmitters.*

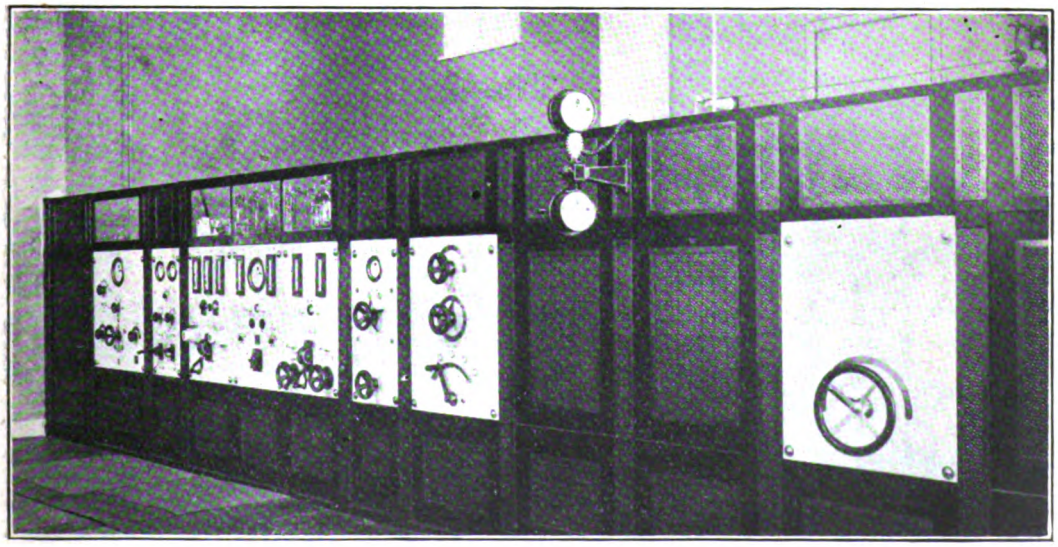

Fig. 5. *Panels of the 14kW transmitter.*

Digitized by Google

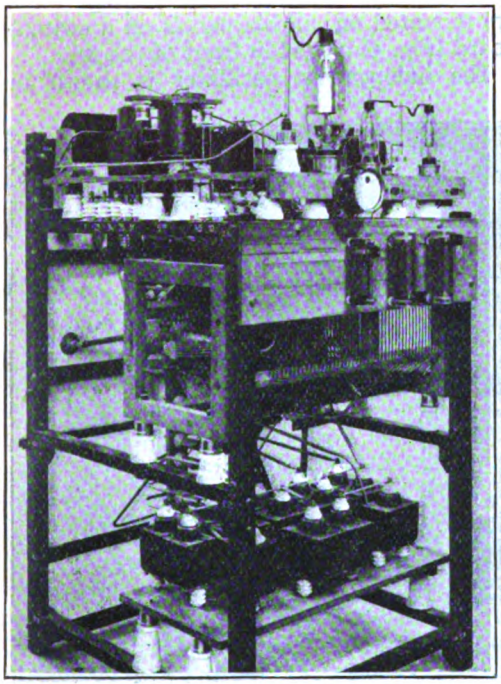

Fig. 6. *Independent oscillator and modulating valves.*

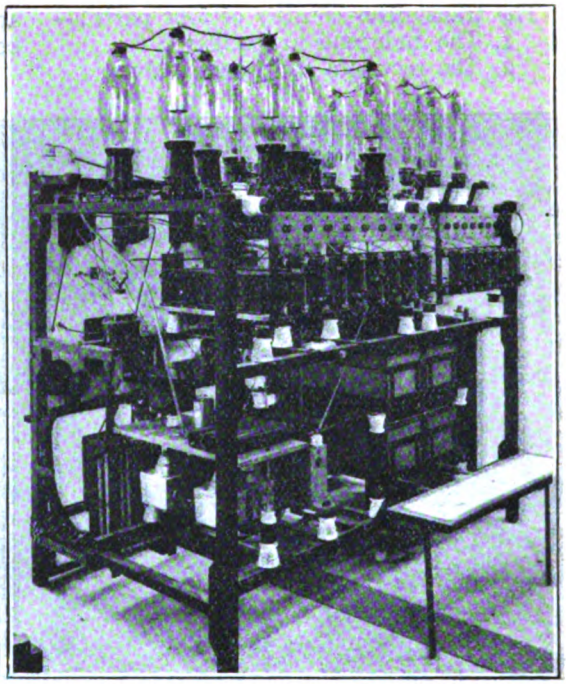

Fig. 7. *Rectifiers and power valves.*

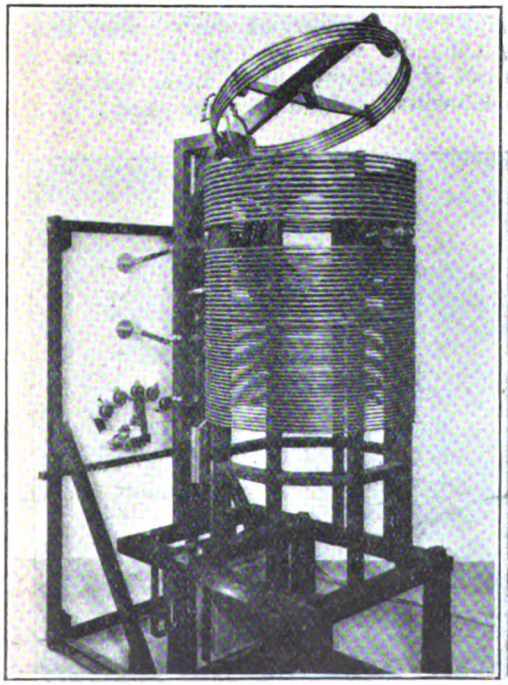

Fig. 8. *Main anode coil and aerial coupling.*

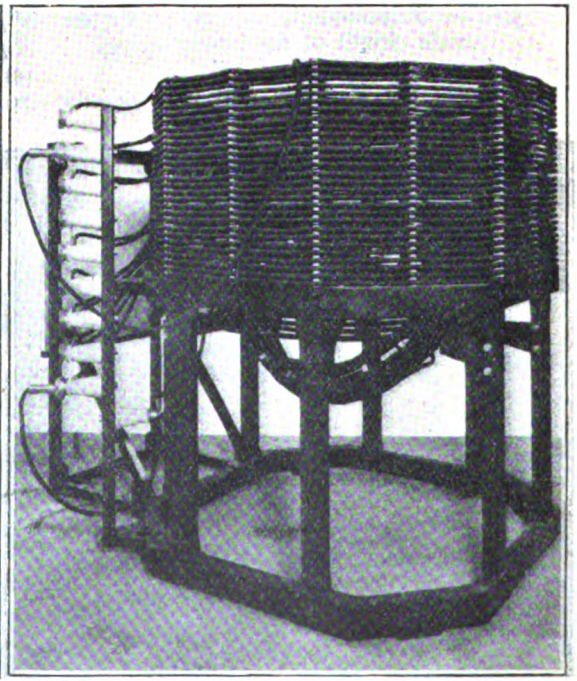

Fig. 9. *Aerial tuning coil.*

Digitized by Google

are the two modulating valves (Type RV24) in parallel, having an output of about 10 watts; these are normally controlled from the amplifiers shown in Fig. 2, but the panel also has a microphone and telephone transformer, so that modulation can be carried out at the switchboard if necessary.

The modulation is carried out on the method patented by the Telefunken Company, and which they have found very successful. The usual high resistance grid-leak is replaced by the variable resistance of the modulating valves, the resistance of which depends on their grid voltage, which, in turn, is controlled by the amplified microphone current.

valves; there are eight of the former (Type RG44) and eight of the latter (Type RS53). Each valve has an output of 2.5 kilowatts, with an anode voltage of 10,000 volts. Beneath the rectifiers and valves are the transformer, by means of which the 500-cycle current is raised from 220 to $2 \times 10{,}000$ volts, the smoothing condenser and other auxiliary apparatus.

The intermediate circuit between the power valves and the aerial is shown in Fig. 8; the aerial coupling coil is seen at the top and the condenser at the bottom.

The aerial tuning coil (Fig. 9) can be adjusted in a number of steps, and also by means of the variometer coil seen below it.

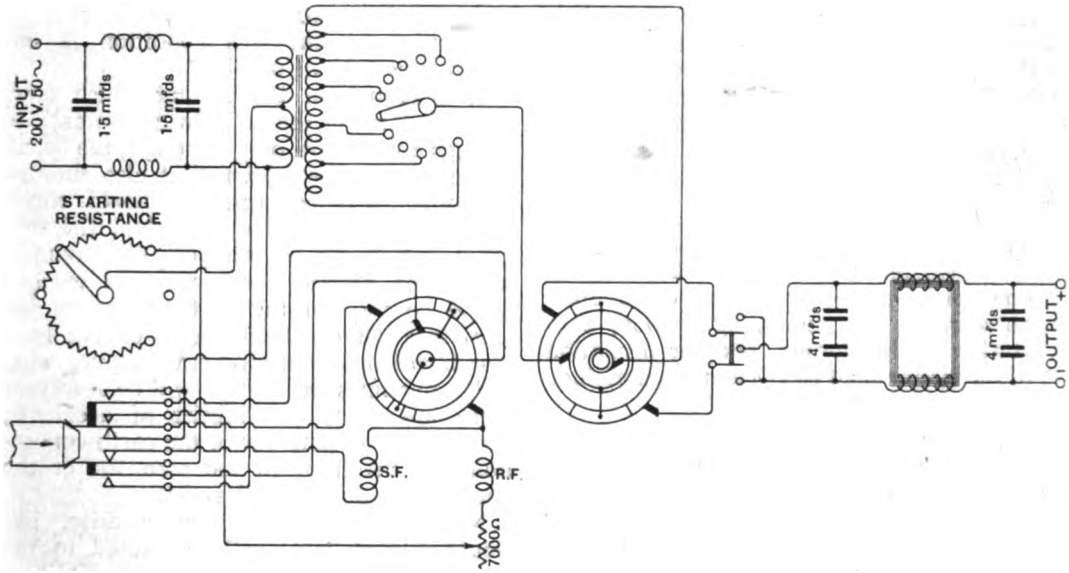

Fig. 10. *Simplified diagram of connections.*

The oscillations produced by the independent oscillator are amplified by the main power valves which have a low resistance oscillatory circuit in the anode circuit. The aerial is coupled to this so-called intermediate circuit, which tends to reduce to a negligible amplitude the harmonics of the fundamental oscillation.

The modulation does not affect the independent oscillating circuit, which is the real oscillation generator, but the modulating valves replace the grid-leak on the power valves, which are really power amplifiers, and thus vary their amplification.

Fig. 7 shows the rectifiers and power

There are ammeters in both the intermediate and the aerial circuit.

Fig. 10 is a simplified diagram of connections.

The aerial is of the T type, consisting of four wires about 80 metres long and 10 metres wide, suspended between two masts 210 metres high. The length of the down lead is about 200 metres. The aerial has a capacity of 2,500 cms. (0.0028μF) and a natural wavelength of about 1,500 metres. The station can work at any wave-length between 1,000 and 3,200 metres, but its normal wavelength is 1,300 metres.

G.W.O.H.

Digitized by Google

Obtaining Anode Current from Mains.

Points to be Observed. [R355.007.5

ARTICLES have recently appeared in the wireless Press showing methods by which the high tension current required for the anode supply can be obtained from electric light mains. In carrying out many of these schemes no attention is paid to the Board of Trade regulations, which were made for the purpose of securing the safety of the public and an efficient supply of electrical energy. These regulations provide that where the pressure of a supply between the adjacent conductors of a three-wire system of mains exceeds 125 volts, the intermediate wire shall be connected to earth subject to the agreement of the Postmaster-General, and in accordance with the following conditions :—

(*a*) The connection with earth of the intermediate conductor shall be made at one point only on each distinct circuit—namely, at the generating station, sub-station or transformer, and the insulation of the circuit shall be efficiently maintained at all other parts.

(*b*) The current from the intermediate conductor to earth shall be continuously recorded, and if it at any time exceed one-thousandth part of the maximum supply current, steps shall immediately be taken to improve the insulation of the system.

These regulations alone should be sufficient to show why the neutral main or any other main should not be earthed indiscriminately. As, however, there are people who disregard all rules and regulations, a word of warning as to the danger attendant upon the breaking of these regulations will not be inopportune.

It is usual to insert in the earthed connection an ammeter to comply with regulation (*b*) above. A little consideration will show that if an earth fault develops on one of the outer mains, the current will flow to earth at the fault and pass back to the generator through this ammeter. In order to protect this ammeter from injury by a very heavy fault current, an automatic switch is provided to cut the ammeter out of circuit and introduce in its place a resistance whenever the current becomes too great for the ammeter to record. The reading on this ammeter is accepted as an indication of the condition of the mains. It is possible, however, for earth faults to develop simultaneously on both outers of the supply, and for the earth currents through these faults to balance, in which case no reading would be observed on the ammeter, but this condition is one which very seldom obtains.

It is clear that the current which flows to earth through the faults will pass back to the generator not only through the earth connection at the station, but also through any other earth connection. Should, therefore, a very heavy fault develop, the first thing which would happen on premises where the neutral conductor was earthed would be the blowing of the fuses on the local fuse board. If the fuses on the local fuse board are of fairly heavy copper wire, as is sometimes the case, it will be seen that there are many possibilities of accidents, such as the burning out of the earth connection and the firing of the premises, or the burning out of the wireless set.

Not only does this danger arise, but considerable trouble will be caused to the power station engineer whose duty it is to maintain the supply, as it can easily be seen that should a large number of experimenters earth the neutral main, the ammeter at the station will give false readings. In addition to this, certain methods of measuring the insulation resistance of the mains and the location of faults would be rendered ineffective.

In addition to the above, the earthing of the neutral main may cause trouble to all the receiving apparatus in the neighbourhood, particularly in the case of alternating current networks, and in the writer's opinion the phenomenon of fading might be experienced far more than it is at the present time.

It is to be hoped that these few notes will be sufficient to prevent the improper earthing of electric light mains.

Digitized by Google

Effective Resistance of Inductance Coils at Radio Frequency.—Part III.

By S. Butterworth. [R144

(*Admiralty Research Laboratory, Teddington.*)

13. Multilayer Coils of Small Winding Depth.

Let the winding section of the coil be $b \times t$. Let t/b be small and suppose at first that b is small compared with the radius of the coil. Let there be m layers in the depth t and n turns per layer.

The field at any point in the section will have two components, H_t and H_b, parallel to t and b respectively, which will act independently in producing eddy losses.

As regards H_t, the field acting on a single wire is the same as that for a single layer coil for which $c=b/mn$. Thus the added resistance due to the action of H_t is

$$\tfrac{1}{3}\pi^2 RG(mnd/b)^2$$

the number of turns being assumed large.

As regards H_b, each layer behaves as a current sheet having current density nI/b. In the immediate neighbourhood of the sheet the component of the field parallel to the sheet is

$$h = 2\pi nI/b$$

and reverses its direction as we pass through the sheet.

If, as is assumed, t/b is small, the value of h due to any one layer will remain the same throughout the winding section, so that the field acting on the top layer due to the remaining layers is $(m-1)\,h$, on the next layer $(m-3)\,h$, on the third layer $(m-5)\,h$ and so on.

The mean square field for all the layers is therefore

$$h^2\{(m-1)^2+(m-3)^2+(m-5)^2+\ldots\}/m$$
$$= (m^2-1)h^2/3 = \tfrac{4}{3}\pi^2(m^2-1)(nI/b)^2.$$

Applying this result to the eddy loss formula it follows that the added resistance due to the action of H_b is

$$\tfrac{1}{3}\pi^2(m^2-1)RG(nd/b)^2$$

The total resistance of a short shallow multilayer solenoid or disc coil is therefore got by adding these two resistance terms to the skin resistance and we have

$$R_c=R\{1+F+\tfrac{1}{3}\pi^2(2m^2-1)G(nd/b)^2\} \quad (29)$$

The same reasoning may be applied to the case where b is not small compared with the radius of the coil and it is found that

$$R_c=R\left\{1+F+\left(u+\tfrac{1}{3}\pi^2\frac{m^2-1}{m^2}\right)G(mnd/b)^2\right\} \quad (30)$$

In applying to solenoidal coils, the length b is interpreted as the winding length of the coil and in applying to disc coils b is the difference between the inner and outer radii. In either case, the width t is supposed to be very small.

If the number of layers is large, and the total number of turns $(m \times n)$ is N, formula (30) becomes

$$R_c=R\{1+F+(u+\tfrac{1}{3}\pi^2)G(Nd/b)^2\} \quad (31)$$

14. Multilayer Coils of Finite Winding Depth.

The theory of the losses in multilayer coils at very high frequencies has been given by Prof. Fortescue[17] who, however, confined himself to coils for which the winding length lies between one and three times the overall radius, and, for solid wire coils, assumed the wire so thick that the square root law holds in regard to frequency. Otherwise his method is similar to that developed above. As regards the mean square field acting on the wires of the coil, Fortescue expresses this in the form

$$H^2_m = K^2N^2I^2/D^2 \quad .. \quad (32)$$

where

D = overall diameter of coil.
N = total turns,

and K is a factor depending on the ratios

[17] *Loc. cit.* [11].

Digitized by Google

b/D and t/D in which b is the winding length and t the winding depth. Tables of values of K are given covering the range $b/D=0.5$ to $b/D=1.5$.

It turns out, however, that these longish coils are uneconomical both in regard to space, number of turns and length of wire, so that the writer considered it advisable to calculate the values for shorter coils and hoped that at the point of overlapping the values would link on to those of Prof. Fortescue. This, unfortunately, was not so, the discrepancy being such that in extreme cases the copper losses using Fortescue's values of K are only 60 per cent. of those obtained with the writer's values. Some means of checking which of the values was the more reliable was therefore necessary.

The mode of arriving at the K factors is long and tedious, and the writer was not prepared to spend the time recalculating the values over the range of Fortescue's coils. The check adopted was therefore to find whether the present or Fortescue's values trended satisfactorily towards the easily found values for infinitely long coils.

The factor K becomes zero for such coils, but if we multiply K by b/D the limiting value for b/D infinity is finite. The method of check adopted therefore was to plot curves for the various values of t/D of the factor Kb/D, using D/b as abscissæ, and to find which set of values was pointing to the proper value of Kb/D when $D/b = 0$.

These curves, using the *present* values, are given in Fig. 6. It is seen that the portions of the curves linking the last calculated values of Kb/D for finite coils ($D/b=2$) to the zero value are continuous with the remainder. This could not be done with Fortescue's values.

We are forced to conclude that the present values must be the correct ones. The curves of Fig. 6 may be used to get approximate values of K for any length of coil.

The formula for Kb/D for infinitely long coils is

$$Kb/D = 2\pi \{ (4D-6t)\ (3D-3t) \}^{\frac{1}{2}} \quad \ldots \quad (33)$$

For short coils the values of K as found by the present writer are given in Table VII. In comparing with Fortescue's Table it should be noted that Fortescue uses the ampere as the unit of current, so that apart from the above mentioned discrepancy Fortescue's K values are ten times the present values.

For the case of solenoids, for which $t/D=0$, it is easily shown by the theory of the previous section that

$$K^2 = \frac{4D^2}{b^2}\left\{ u + \tfrac{1}{3}\pi^2\left(1 - \frac{1}{m^2}\right)\right\} \quad \ldots \quad (34)$$

and a similar formula holds for disc coils for which $b/D=0$. The mode of arriving at the values of K in the general case is indicated in the Appendix.

We can now readily arrive at the A.C. resistance formula for multilayer coils by using the value of H^2_m given by (32) in the eddy loss formula (10) and adding this loss to the ordinary skin loss. We then obtain

$$R_c = R\left\{ 1 + F + \tfrac{1}{4}\left(\frac{KNd}{D}\right)^2 G \right\} \quad \ldots \quad (35)$$

TABLE VII.

VALUES OF THE FACTOR K IN FORMULA (32).

b/D	0.000	0.125	0.250	0.375	0.500
t/D					
0.0	Inf.	41.7	21.2	14.4	11.0
0.1	52.4	23.3	15.4	11.6	9.5
0.2	27.4	16.2	12.4	9.9	8.2
0.3	19.6	13.7	10.7	8.8	7.5
0.4	16.0	12.0	9.5	8.0	6.9
0.5	13.8	10.4	8.4	7.0	6.0

NOTE.—The column $b/D=0$ refers to *many* layered disc coils, and the row $t/D=0$ to *many* layered solenoids. When the layers are few the following values hold for K :—

SOLENOID WITH m LAYERS.

b/D	0.000	0.125	0.250	0.375	0.500
m					
1	—	30.1	15.6	10.7	8.3
2	—	39.2	20.0	13.6	10.4
3	—	40.6	20.7	14.0	10.7
Inf.	—	41.7	21.2	14.4	11.0

DISC COIL WITH m LAYERS.

t/D	0.1	0.2	0.3	0.4	0.5
m					
1	37.8	20.6	15.4	13.2	11.7
2	45.0	25.9	18.6	15.3	13.3
3	51.0	26.8	19.2	15.7	13.6
Inf.	52.4	27.4	19.6	16.0	13.8

Digitized by Google

This formula, together with Tables I. and VII. and the curves of Fig. 6, includes all the previous formulæ and tables and constitutes the final solution of the A.C. resistance problem for solid wire coils with well spaced windings.

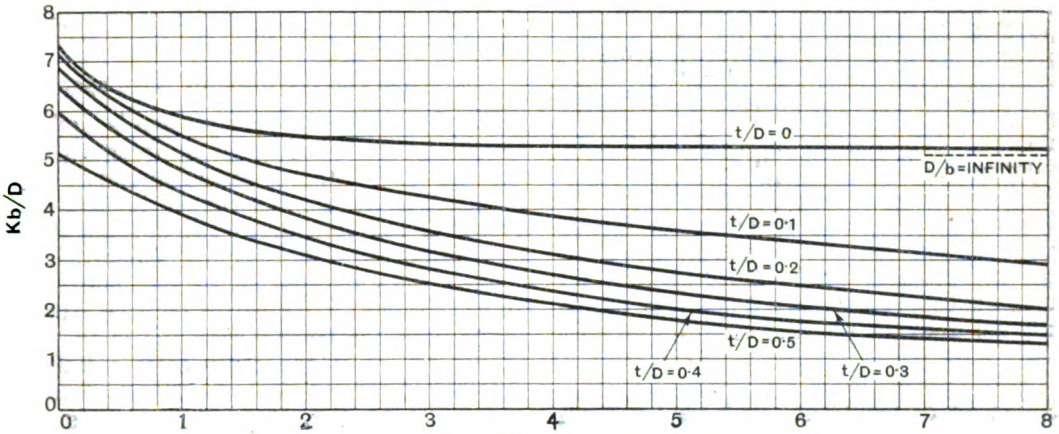

Fig. 6.

In application the self-capacity correction as given by (23) must also be made when the coil is worked at wave-lengths which are comparable with the natural wave-length of the coil.

15. Test of Formula by Comparison with Observed Resistances.

Our first example is a coil in which there is no space factor other than that due to the unavoidable insulation space. In this case the general field losses are the main term in the resistance, so that the comparison gives a very severe test of the general field loss formula.

A coil of 5,000 microhenries was wound with 350 turns of No. 24 D.S.C. wire, the dimensions of the coil being $D=7.5$ cm., $b=0.75$ cm., $t=2.5$ cm.

The D.C. resistance of the coil was 3.8 ohms and the following A.C. resistances were measured by the reactance-variation method in a resonant circuit :—

Wave length (metres).	Measured resistance (ohms).	Calculated copper resistance (ohms).	Cu. loss / Total loss.
2,000	370	322	0.87
2,500	283	242	0.86
3,000	222	193	0.87

The second example is for a series of coils of equal dimensions but of different inductances, each coil being measured at that wave-length which gives resonance with a condenser of 1,000$\mu\mu$F. The common dimensions are $D=8.3$ cm., $b=1.5$ cm., $t=3.0$ cm.

Coil No.	Turns.	Wire gauge.	Inductance (μH.)	Wave-length (metres).	Resistances. D.C.	A.C.		Cu. loss / Total loss.
					Ohms.	Obsd.	Calc.	
1	46	22	79	540	0.33	2.5	2.1	0.84
2	72	22	197	840	0.53	5.1	4.4	0.86
3	98	23	304	1,150	0.88	9.0	7.4	0.82
4	141	24	745	1,650	1.58	17.4	15.2	0.87
5	244	24	2,240	2,860	2.75	43.5	40.0	0.92
6	374	28	5,280	4,350	9.61	29.2	24.8	0.85
7	570	30	12,400	6,700	20.8	48.9	33	0.68
8	835	30	26,300	9,800	31.3	69.5	48	0.69
9	1,280	34	62,260	15,000	85	127	95	0.75
10	2,150	36	177,300	25,000	196	264	204	0.77

Digitized by Google

The wire gauge and turns have been estimated from the measured D.C. resistance and inductance and the calculated A.C. resistance is based on these estimated values. There were also small variations in the measured dimensions, but for ease of calculation the average values of D, b and t throughout the series was used. Thus the loss ratio in the last column can only be taken as representing approximately the importance of the copper loss.

Other examples will be given later in illustrating points of design. The above examples are however sufficient to show that the basis of design must be that for minimum copper loss and not (as many people suppose) from the point of view of dielectric loss.

16. Design of Inductance Coils for Minimum Copper Losses—General Principles.

The general problem to be solved is to find what form of coil to use and what diameter of wire to employ to produce a coil having a given inductance and the smallest possible resistance at a given frequency. In regard to the form of the coil, factors other than the resistance and inductance also enter into the problem. Thus if we are considering a frame aerial the turn area enters into the question, as this determines the E.M.F. induced by a given external field. It is also sometimes considered that a flat type of coil is advantageous, as then we may obtain close coupling with another similar type of coil. It has even been suggested that the type of coil should be based upon the ease with which it may be adapted to existing types of plugs and plug holders. Relative costs of construction also play an important part in deciding between the relative merits of two coils so that, other things being equal, a coil which will give the requisite inductance with few turns is to be preferred to one requiring many turns, as the former coil will be quicker to wind. It is clearly therefore impossible to lay down a definite rule and say that a coil of any particular shape is the best coil for all purposes.

We may, however, prescribe certain conditions to fix our problem and find the "best" coil fulfilling these conditions.

For the purpose of comparing coils of different shapes we will take three different assumptions as follows :—

(*a*) The volume of the copper is the same for all coils.

(*b*) The same length of wire is used in all coils.

(*c*) Each coil occupies the same space.

The first method of comparison is equivalent to the old D.C. problem in which a given amount of copper was available and it was required to utilise this copper to give the best D.C. time constant (ratio of inductance to resistance). The resulting shape of coil is sometimes referred to as the most economical shape. This would only be true if the cost of the copper were the main cost of the coil or if the other costs remained constant. For the second method of comparison to be fair, the coil costs must be mainly proportional to the length of the wire. This seems fairly reasonable, especially in the case of stranded wire coils where the wire is expensive, and also takes into account the fact that the cost of winding depends largely on the length of wire. The third method is of value when compactness is an important consideration. A small difficulty arises in deciding how to define "space occupied." If we express this by mere overall volume of coil our equations lead us to a single layer disc coil of very large diameter, but of negligible length, a form which is by no means compact. If we measure space occupied by the overall diameter (as was done by Prof. Fortescue) we are led to a very long solenoid. Prof. Fortescue got out of this difficulty by pointing out that after a certain length the gain in resistance was small and therefore recommended a coil of length equal to the diameter. If, however, we wish to give both length and diameter due weight the most suitable criterion appears to the writer to compare coils of equal surface area, and the Tables to be given refer to coils satisfying this condition. The coils compared on this basis therefore fall in diameter as the length increases, and the disc coil is kept of finite diameter. If sketches of a series of such coils be drawn they appear to the eye to be about equally compact, except perhaps for the long, small-diameter solenoids. However, it turns out that we have passed through the region of efficient coils before

Digitized by Google

reaching this stage. This mode of comparison may seem somewhat arbitrary, but it is necessary to make some such assumption to put the matter upon a numerical basis. In addition, it turns out that if the comparison be made on assumption (*a*), (*b*) or (*c*) the resulting best shape is nearly the same, and the difference between coils in the neighbourhood of the "best" shape are so slight in regard to increase of resistance that the designer is left with considerable latitude to fulfil conditions of good coupling or of accommodation into various shapes of spaces without thereby departing seriously from the best resistance conditions.

As regards the equally compact coils (condition (*c*)) the vertical columns of the Tables are absolutely valid and tell us the best depth of winding to employ for any given ratio of length to overall diameter.

17. Inductance of Coil.

As we are going to compare coils of equal inductance, we require an equation connecting the inductance with the dimensions and turns of the coil. The equation for the inductance will be written

$$L = \frac{L_0 N^2 D}{1{,}000} \quad .. \quad .. (36)$$

in which L_0 is a shape factor and is given by the following Table, and L is the required inductance in μH.

TABLE VIII.

VALUES OF L_0.

b/D	0.000	0.125	0.250	0.375	0.500
t/D					
0.0	Inf.	18.68	14.43	12.02	10.37
0.1	17.46	12.92	10.52	8.93	7.78
0.2	11.51	9.10	7.58	6.49	5.68
0.3	7.82	6.33	5.31	4.57	4.00
0.4	5.26	4.27	3.59	3.08	2.69
0.5	3.48	2.82	2.37	2.03	1.78

18. Design for Given Volume of Copper.

We will first compare coils which are all wound with the same length and diameter of wire. If the length of the wire be l we have

$$l = \pi N(D-t) = \pi ND\,(1-t/D) \ldots \quad (37)$$

Now for each possible shape of coil equation (36) will determine N^2D in terms of the inductance, and equation (37) will determine ND in terms of the length of wire, so that the two equations may be used to find N and D separately. As we pass from one shape of coil to another the values of N and D will vary, as (36) and (37) involve shape factors. Now in the resistance equation (35) the D.C. resistance will be the same for all the coils and also the functions F and G will be the same. In fact the only quantity that varies for different shapes of coils is the factor KN/D. The best shape of coil is clearly therefore the one which yields the minimum value for KN/D. If we use (36) and (37) to express N and D in terms of shape factors we find that KN/D is proportional to $K(1-t/D)^3/L_0^2 = \phi$ say.

The values of ϕ are given in Table IX.

The Table shows that the best coil is a single-layer coil having a winding length equal to one-third its diameter. The best single-layer disc coil should have a winding depth equal to one-quarter the external diameter. If a multilayer coil is desirable the Table shows that there is a wide range

TABLE IX.

VALUES OF $\phi = K\,(1 - t\,D)^3/L_0^2$.

S.L. = Single-layer. M.L. = Multi-layer.

b/D	0.000		0.125	0.250	0.375	0.500
t/D						
0		S.L.	0.087	0.075	0.075	0.077
		M.L.	0.120	0.102	0.100	0.102
	S.L.	M.L.				
0.1	0.090	0.125	0.102	0.101	0.106	0.114
0.2	0.080	0.106	0.101	0.110	0.120	0.130
0.3	0.079	0.110	0.118	0.130	0.144	0.161
0.4	0.101	0.124	0.142	0.158	0.182	0.206
0.5	0.120	0.142	0.163	0.187	0.212	0.236

of choice, and if we make $5t + 3b = D$ we shall never depart greatly from the condition of maximum efficiency.

Next, keeping the shape constant, let us suppose a series of coils wound with different diameters of wire, the length of wire being chosen so that the volume of copper remains constant; that is, l must be proportional to $1/d^2$ Again the number of turns and the overall diameter will vary from coil to coil. The inductance equation (36) shows that N^2D remains constant and (37) shows

Digitized by Google

that ND is proportional to l. Hence N is proportional to $1/l$ and D to l^2 so that N/D is proportional to $1/l^1$, that is to d^6. In the resistance equation (35) the D.C. resistance R varies as l/d^2 or as $1/d^4$. The functions F and G also vary. For *low* frequencies F is negligible and G varies as d^4.

Then from these variations and (35), the skin resistance R_s $\{ = R(1 + F)\}$ is of the form A/d^4 and the general field resistance R_h is of the form Bd^{14} where A and B are independent of diameter.

The whole resistance may therefore be written

$$R_c = R_s + R_h = \frac{A}{d^4} + Bd^{14} \qquad (38)$$

The best diameter of wire is found by differentiating (38) with respect to d and equating to zero. Doing this we find

$$2R_s = 7R_h \quad .. \quad ... \quad (39)$$

For *high* frequencies F and G are large and both proportional to d. In this case R_s is of the form A'/d^3 and R_h of the form $B'd^{11}$. The minimum occurs when

$$3R_s = 11R_h \quad ... \quad (40)$$

The difference between conditions (39) and (40) is so slight that we may say that for *any* frequency the best diameter is such that $R_s = 3.6R_h$.

The practical method of deducing the proper diameter is deferred to a later section.

19. Design for Fixed Length of Wire.

If coils of equal length of wire are compared, the best shape is found exactly as in the last section. The best diameter is however different, as we now suppose the different coils wound with the same length of wire in all cases.

R now varies as $1/d^2$ and for a given shape N/D remains constant. Hence at *low* frequencies R_s is proportional to $1/d^2$ and R_h to d^4 so that by the method of the previous section the condition for the best diameter becomes

$$R_s = 2R_h \quad ... \quad ... \quad (41)$$

At *high* frequencies R_s is proportional to $1/d$ and R_h to d and the best diameter condition is

$$R_s = R_h \quad ... \quad ... \quad (42)$$

20. Design for Fixed Overall Surface.

The overall surface S of the coil is given by the formula

$$S = \tfrac{1}{2}\pi D^2 (1 + 2b/D) \quad ... \quad (43)$$

It is clear that if we take a coil of given shape and inductance the condition of constant surface fixes the diameter of the coil and the inductance then fixes the number of turns. Hence the length of wire is fixed and the best diameter of wire is therefore the same as in the last section.

The best shape of coil depends to some extent upon the frequency.

For *low* frequencies the condition $R_s = 2R_h$ makes d^4 proportional to D/KN, and when the condition is satisfied

$$R_c = 6\,\rho\, N\,(D-t)/d^2 \quad ... \quad (44)$$

or on elimination of d, Rc is proportional to

$$(1-t/D)\ (K^2N^5D)^{\frac{1}{4}}$$

The inductance equation (36) and the surface equation (43) enable us also to express N and D in terms of shape factors, and we obtain finally

$$R_c = A\,K^{\frac{1}{4}}\,(1-t/D)\,(1+2b/D)^{\frac{1}{4}}\,L_0^{5/6} \quad (45)$$

in which A is proportional to $f^{\frac{1}{4}}\,L^{5/6}/S^{\frac{1}{4}}$.

By a similar process of reasoning in the case of *high* frequencies we obtain

$$R_c = BK\,(1-t/D)(1+2b/D)^{\frac{1}{4}}\,L_0 \quad (46)$$

in which B is proportional to $f^{\frac{1}{2}}\,L/S^{\frac{1}{2}}$

To compare various shapes of coils we must therefore calculate the shape factors (45) and (46). The results are given in Table X.

On comparing these Tables with Table IX., it is seen that the best coils for a given space are somewhat longer than the best coils for a given amount of copper, but, owing to the slow variation in the neighbourhood of minimum resistance, the same general rules may be taken to apply in both cases. The advantage of single layer coils is again apparent.

A study of the numbers in the vertical columns is instructive, as the numbers in any one column refer to coils of equal outside surfaces and we therefore see how far it is profitable or otherwise to increase the winding depth. Thus if we have decided that it is convenient to use a winding length equal to one-quarter the overall diameter, the column $b/D = 0.25$ tells us the best resistance we can get for various winding depths.

The first four numbers show that as we pass from single to multilayer coils, keeping the winding depth very small, there is a progressive increase in resistance. The

Digitized by Google

remaining five numbers give the effect of diminishing the internal diameter keeping the external diameter constant. There is a diminution in resistance until $t/D = 0.15$ and then the resistance increases again, but the gain obtained by increasing the winding depth is not enough in this case to counterbalance the loss in passing from a single layer to a multilayer coil.

It must be emphasised that these comparisons refer to coils of equal inductance, so that for each winding depth the turns are always adjusted to satisfy this condition; also the diameter of wire in each case is such as to give the minimum resistance for each shape. In this respect the comparison differs from that usually made in comparing various shapes of coils, where it is nearly always assumed that the diameter of the wire is constant.

21. Large and Small Coils compared.

The forms of the A and B factors in (45) and (46) enable us to answer the question as to what advantage may be expected by increasing the diameter of the coil.

Since S is proportional to $D^{\frac{3}{2}}$ for a given shape, the form of A shows that for *low* frequencies the "best" resistance varies inversely as the square root of the diameter and for *high* frequencies the "best" resistance varies inversely as the diameter as is seen from the form of B.

The reason for the slow increase in efficiency with increase of coil diameter at low frequencies is seen when we consider the variation of "best" space factor with coil diameter.

The area of winding section available per turn is proportional to D^2/N, and, if the inductance is held constant, N^2 is

TABLE X.

RELATIVE RESISTANCES OF COILS OF EQUAL INDUCTANCE AND EQUAL SURFACE.

(A) LOW FREQUENCIES.

b/D	0.000		0.125	0.250	0.375	0.500	0.625	0.750	0.875
t/D									
0.0	one layer		0.89	0.75	0.71	0.70	0.70	0.71	
	two layers		1.07	0.88	0.83	0.81	0.80	0.81	
	three layers		1.09	0.90	0.84	0.82	0.82	0.83	
	multilayer		1.11	0.92	0.86	0.84	0.83	0.84	
	S.L.	M.L.							
0.1	0.96	1.19	0.92	0.87	0.86	0.88	—	—	
0.2	0.79	0.95	0.86	0.88	0.89	0.90	—	—	
0.3	0.78	0.92	0.91	0.94	0.97	1.00	—	—	
0.4	0.84	0.95	0.99	1.03	1.08	1.13	—	—	
0.5	0.91	1.02	1.06	1.11	1.17	1.21	—	—	

(B) HIGH FREQUENCIES.

b/D	0.000		0.125	0.250	0.375	0.500	0.625	0.750	0.875
t/D									
0.0	one layer		1.81	1.32	1.18	1.12	1.12	1.12	1.14
	two layers		2.36	1.68	1.49	1.40	1.39	1.38	1.39
	three layers		2.44	1.74	1.44	1.43	1.42	1.42	1.43
	multilayer		2.51	1.79	1.49	1.49	1.45	1.45	1.46
	S.L.	M.L.							
0.1	1.95	2.70	1.82	1.60	1.54	1.55	—	—	—
0.2	1.43	1.90	1.59	1.59	1.61	1.64	—	—	—
0.3	1.26	1.76	1.70	1.72	1.78	1.86	—	—	—
0.4	1.50	1.82	1.88	1.93	2.06	2.17	—	—	—
0.5	1.68	1.98	2.06	2.16	2.27	2.37	—	—	—

Digitized by Google

proportional to $1/D$. Hence as the coil diameter increases the area commanded by a turn varies as $D^{5/2}$. On the other hand the best diameter of wire is proportional to $(D/N)^{\frac{1}{2}}$ that is to $D^{\frac{1}{2}}$ when the inductance is held constant, so that the copper area only increases as the diameter of the coil.

Thus although there is a rapid increase in available space for the turns we cannot take advantage of this as we would increase the A.C. resistance of the coil by filling the space with copper. The only way to make further use of the available space is to use stranded wire instead of solid wire.

NOTE.—Since the publication of the previous instalment of this article, Mr. A. L. M. Sowerby has published an article in which inductance coils of various forms are compared experimentally (*E.W. & W.E.*, June, 1926). He arrives at the conclusion that there is a "best" spacing but not a "best" ratio of length to diameter. His results are not, however, in contradiction with theory as the coils prepared by him all had equal wire diameters. In Table I. of Mr. Sowerby's paper it is shown that the H.F. resistance remained constant for a large variation of length-diameter ratio. Fortunately, Mr. Sowerby also adds a column giving the D.C. resistance of the various coils, which is shown to pass through a definite minimum. Since the diameter of the wire is constant, this means that the length of wire employed passes through a minimum, and therefore there is a "best" shape, viz., that which will produce the coil with the minimum amount of wire. Similarly, if we calculated the spaces occupied by each coil as defined by condition (*c*) above, we should find a "most compact" coil in Mr. Sowerby's series. These remarks seem to emphasise how careful one must be in deciding what is the best shape of coil, and shows why so many different recommendations have been made from time to time.

S. BUTTERWORTH.

12th June, 1926.

Among the Experimental Transmitters.

THE indiscriminate output of QSL cards by listeners is already becoming a nuisance to those amateur transmitters who are engaged in serious research. A great number of these cards undoubtedly fulfil the desired object of furnishing transmitters with useful reports concerning their tests, but we fear that an ever-increasing number is sent out merely with a view of collecting "wall-paper," and resembles the quest by small boys for cigarette cards. The senders of these worthless cards appear aggrieved if the recipients fail to reply. One amateur informs us that if he were to send a reply to every QSL card he receives, it would be necessary for him to engage a secretary for that purpose only, and the cost in postage would be very considerable.

Perhaps the best solution to this difficulty would be for transmitters to devise a code which would signify the nature of the reports desired. An experimenter working on comparatively high power would probably only be interested in reports from distant stations, while one conducting tests on low-power might welcome cards from listeners at all ranges; another might only be interested in fading effects or meteorological observations, and cards merely stating that his signals had been heard would be of no material use. We suggest that the T. & R. Section of the R.S.G.B. should consider this matter and arrange some such code. Listeners who wish to help experimenters will then know what special records are desired, while mere collectors of wallpaper will tacitly be warned that no contributions to their collections may be expected from that particular source.

Norwegian and Danish Amateurs.

We understand from correspondents in Norway and Denmark that amateurs in those countries are now able to obtain transmitting licences.

In Norway licences are being issued for transmission on 3—6, 29—35, 43—47, 69—75 and 100—120 metres. The aerial power must not exceed 20 watts. The licencee must possess certain technical qualities and be able to send and receive at least 12 words per minute. The annual fee is fixed at 30 kroner. QSL cards should be sent via the Norsk Amatoer Sender Union, Oslo. The nationality prefix adopted by Norwegian amateurs is LA.

Our Danish correspondent states that the maximum input allowed to amateurs is 100 watts, and the wavelengths allotted are: Below 15 metres, 43—47, 70—75 and 95—115 metres. Transmission is not permitted between 7.30 and 10.30 p.m. (18.30—21.30 G.M.T.). Through the courtesy of the Telegraph Department, the call-signs allotted will begin with the figure 7, and the letters used will, as far as possible, be the applicant's initials; this arrangement allows previously unlicensed experimenters to retain the call-signs they have hitherto used. QSL cards may be sent via Mr. James Steffensen (D7JS), Ehlersvej 8, Hellerup, Denmark.

Digitized by Google

The Multi-Range Ammeter of Constant Resistance. [R384.6

By L. G. A. Sims, M.Sc. (Eng.), and M. Heywood Hunt, M.Sc. (Eng.).

THE practice of extending the range of an ammeter, by placing shunts of suitable value across the instrument, is one which appeals particularly to the radio experimenter, since a single reliable meter can readily be arranged to perform the work of several, with greatly reduced outlay in the first instance.

The presence of such a shunt naturally alters the resistance of the complete instrument, as far as the external circuit is concerned; a fact which, perhaps, is not always fully appreciated, since the cases in which it assumes an importance are comparatively infrequent.

For really accurate work, however, and in certain types of circuit, this alteration of resistance of ammeter and shunt, when used on different ranges, should be taken into account, and it is the object of the present article to indicate certain modifications of the ordinary shunted instrument which, while in no way limiting the utility of the meter as a multi-range instrument, yet ensure that the total resistance of the circuit will not be altered appreciably when changing from one range to another.

Before proceeding to describe the proposed modifications of the ordinary shunted instrument it would, perhaps, assist the reader in following the subsequent argument if a brief consideration of the case of the simple shunted instrument is recalled.

Suppose that the instrument gives a certain deflection when a current i_1 flows through it, and suppose that we wish to shunt it in such a manner that we get the same reading when a current $I=n.i_1$ is flowing through the combination.

Let the resistance of the instrument alone $=r_g$. and the resistance of the shunt to be added$=r_s$.

Then the combined resistance of ammeter and shunt is given by

$$R_c=\left[\frac{r_g.r_s}{r_g+r_s}\right] \quad .. \quad .. \quad (1)$$

The shunt must have such a value that the current flowing through the instrument is still i_1 while the total current is $n.i_1$.

Hence, for direct current, the current through the shunt is $(n-1).\ i_1$.

Since $\quad (n-1).i_1.r_s=i_1.r_g$

we have $\quad r_s=\left[\frac{r_g}{(n-1)}\right] \quad .. \quad .. \quad (2)$

Substituting in (1) for r_s we get :—

$$R_c=\left[\frac{r_g.\frac{r_g}{(n-1)}}{r_g+\left\{\frac{r_g}{(n-1)}\right\}}\right]$$

whence $\quad R_c=\frac{1}{n}.r_g. \quad .. \quad .. \quad (3)$

We want to arrange matters so that the combined resistance of the ammeter and shunt shall be the same as that of the

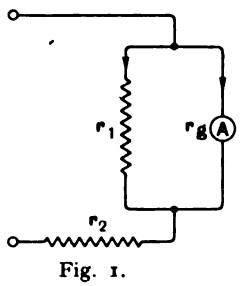

Fig. 1.

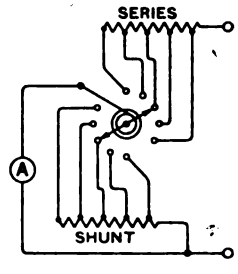

Fig. 2.

instrument when used by itself, and in order to secure this condition we shall have to insert an extra resistance in series with the combination. Consider now the circuit shown in Fig. 1. Let R_t be the total resistance between the line terminals under the new conditions.

Digitized by Google

We have

$$R_t = r_2 + \left[\frac{r_g \cdot r_1}{r_g + r_1}\right]$$

But as on its lowest range we shall require the instrument to read directly, without a shunt, and as on all ranges the total resistance between line terminals is to be constant, then $R_t = r_g$.

From (3) we have :—

$$R_t = r_2 + \frac{1}{n} \cdot r_g \quad .. \quad .. \quad (4)$$

Whence $$r_2 = \left[\frac{n-1}{n} \cdot r_g\right] \quad .. \quad (4A)$$

also $$\left[\frac{r_g \cdot r_1}{r_g + r_1}\right] = \frac{1}{n} \cdot r_g$$

or $$\left[\frac{r_1}{r_g + r_1}\right] = \frac{1}{n} \quad .. \quad .. \quad (5)$$

These expressions are quite general, and we may, as a check, take the case when the instrument is reading directly. Then $n=1$.

From (5) $\left[\frac{r_1}{r_g + r_1}\right] = \frac{1}{n} = 1$ for this case. This is only satisfied when. r_1 is infinitely large compared with r_g, that is to say when the instrument is not shunted.

Also from (4) $r_2 + \frac{1}{n} \cdot r_g = r_g$, giving $r_2 = 0$, which is also correct for this case.

Equations (4A) and (2) provide the necessary information concerning the values of the shunt and series resistances required, in terms of the ammeter internal resistance, and the particular multiplying factor desired. Accordingly, a set of such resistances could be constructed and mounted in the case containing the instrument, together with suitable switches for changing the series and shunt resistances, according to the required ratio.

The arrangement would then be as shown in Fig. 2 in which a rotating wiper moves over two sets of contact studs. It is needless to add that, for accurate work, this switch should be a sound mechanical job, since small contact resistances will easily upset the values of the shunt resistances, especially on the higher ranges, and will falsify the readings. An alternative method would be to employ plugs, or even terminals, though the latter would be undesirable for rapid changing from one range to another.

There is, however, a method which is superior to that previously described, so far as the question of changing the shunts and series resistances is concerned. It will be seen on reference to Fig. 1 that the two resistances r_1 and r_2 can really be regarded as one single resistance, with the ammeter placed across one end and a tapping point.

Now it is possible, by taking suitable tapping points, so to arrange matters that, when a portion of the resistance in shunt with the ammeter is cut out, it is added, at the same time, to the total resistance in series. The amount which is removed from the shunt can be arranged to be almost exactly the required addition to the series branch. It cannot be arranged to be quite the correct amount, as will be shown below, but the error involved is very small ; smaller in most cases than the error involved in reading the instrument, and the simplification obtained is considerable. The arrangement in this case will take the form shown in Fig. 3.

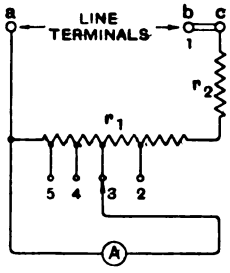

Fig. 3.

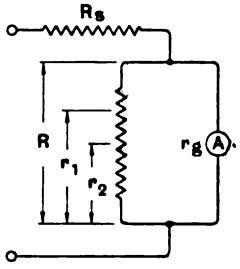

Fig. 4.

When using the instrument direct, the link between terminals *b* and *c* is opened, and the flexible lead from one side of the ammeter is connected to terminal *b* (No. 1). For other ranges, it is connected to terminals 2, 3, 4, etc., and the link between *b* and *c* is replaced.

The resistance between the line terminals will be practically constant for all ranges, and equal to the resistance of the ammeter itself within very close limits.

We will now consider the design of suitable resistances to convert an ordinary ammeter into a constant resistance, multi-range instrument.

Taking first the case of a fairly high resistance instrument, such as would be employed for the measurement of small currents, we have :—

Resistance of instrument, $r_g = 30$ ohms.

Digitized by Google

Required : r_1 and r_2 for the following ranges :—

$$n=10,\ 100,\ 1{,}000.$$

For the case where $n=1$ the instrument is used by itself.

For $n=10$:

$$r_1=30/9=3.333 \text{ ohms.}$$

$$r_2=\left[\frac{n-1}{n}\right]r_g=27.0 \text{ ohms.}$$

For $n=100$:

$$r_1=0.303 \text{ ohm.}$$

$$r_2=29.70 \text{ ohms.}$$

For $n=1{,}000$:

$$r_1=0.03003 \text{ ohm.}$$

$$r_2=29.95 \text{ ohms.}$$

The above values are absolutely correct for constant resistance between terminals. For the approximate method described, *we shall take the value of the shunt resistance as correct.* This will mean that the amount of series resistance on each range will not be exactly correct, but will have the values calculated below.

For cases $n=10$ *and* $n=100$ respectively, $r_1=3.333$ ohms, and 0.303 ohm.

The amount of resistance eliminated, in changing from range $n=10$ to range $n=100$, is therefore equal to 3.030 ohms, which value becomes the added series resistance. For $n=10$, $r_2=27.0$ ohms.

The actual series resistance for $n=100$, is therefore equal to 30.03 ohms.

The value required from the theoretical equation is 29.7 ohms. It will be evident that we have added slightly more resistance than is actually required.

Similarly, the amount of shunt resistance eliminated in changing from range $n=100$ to range $n=1{,}000$, is equal to 0.273 ohm, very nearly.

The added resistance now becomes 30.303 ohms, the theoretical value being 29.95 ohms.

Taking the expression :—

$$\left[r_2+\frac{r_g.r_1}{r_g+r_1}\right]=R_t$$

and inserting the values found for r_1 and r_2 for the various ranges, we can find the actual resistance of the combination on any range.

Thus, for $n=$ 10, R_t (total resistance) $=30$ ohms.

for $n=$ 100, R_t $=30.324$ ohms.

for $n=1{,}000$, R_t $=30.3325$ ohms.

The percentage errors for the respective ranges are therefore :—

0.0%, 1.07%, 1.11%, very nearly.

We can, however, obtain a useful general expression for the error in the total resistance when this approximate method is employed.

It is very important to notice that, because the shunt resistance is always accurate, the ratio "n" is accurate in all cases, and the approximation has no effect upon the reading of the instrument on any range.

In considering the error in overall resistance, it is advisable to change slightly the symbols previously employed.

Let K = the first ratio of the series.
n = any ratio of the series, as previously.
R = shunt resistance, calculated from the equations we have derived, and applying at ratio K.
R_s = series resistance calculated from the equations at ratio K.
R_t = total resistance between terminals on any ratio.
r_g = instrument resistance alone, as previously.

As the ratio is changed from the first value K let the shunt resistance R assume successive values r_1, r_2, r_3, etc. Then, referring to Fig. 4 we see that the following applies.

On 1st Range :

$$R=\infty \quad \text{Instrument alone.}$$

$$R_s=0$$

On 2nd Range :

$$R=\left(\frac{r_g}{n-1}\right)$$

$$R_s=\left(\frac{n-1}{n}\ .\ r_g\right)$$

from equations (2) and (4A).

Up to this point everything is correct, but on succeeding ranges the value of R_s is not calculated, but is simply increased by the amount of shunt resistance eliminated on changing to those ranges.

Hence, added series resistance as R changes

Digitized by Google

to r_N (where N is the number of ranges counted *after the second*)

$$= R - r_1 + (r_1 - r_2) + (r_2 - r_3) + \ldots + (r_{N-1} - r_N)$$
$$= (R - r_N).$$

Thus total series resistance is given by

$$R_s + (R - r_N).$$

Hence on any range where the approximation is used we have

$$R_t = R_s + (R - r_N) + \left[\frac{r_g \cdot r_N}{r_g + r_N}\right]$$

Thus we have

$$\frac{R_t}{r_g} = \left(\frac{K-1}{K}\right) + \frac{1}{K-1} - \frac{1}{n-1} + \frac{1}{n}$$

This simplifies down to

$$\frac{R_t}{r_g} = \left[\frac{K^2 - K + 1}{K(K-1)} - \frac{1}{n(n-1)}\right]^*$$

As r_g is the constant value of resistance which we have approximated, the above expression gives the error at once. It will be noticed that the error depends only on the ratios used, and that it becomes slightly greater as the value of the ratio increases, in a given range of ratios. For ratios of the orders 10, 100, etc., the error is about 1 per cent., rising to about 5 per cent. for ratios of the orders 5, 25, etc. A short consideration will show how vastly superior to the case of the simple shunted instrument this is, and it should be remembered that the error can be entirely eliminated if the approximation is not employed. The following table has been compiled from the foregoing equations for two high resistance instruments, such as the radio experimenter would be likely to employ, and for a low resistance instrument. Equations (2) and (4A) are those from which the required shunt and series resistances are calculated.

Ratio.	Instrument resistance.	Shunt resistance.	Series resistance.	Per cent. error from constant resistance.
1 to 1 instr. alone ..	116 ohms	∞	0.0000	0.00
10 to 1 ..	,,	12.8870	104.4000	0.00
100 to 1 ..	,,	1.1717	116.1170	1.110
1,000 to 1 ..	,,	0.1161	117.1830	1.111
1 to 1 instr. alone ..	30 ohms	∞	0.0000	0.00
10 to 1 ..	,,	3.3333	27.0000	0.00
100 to 1 ..	,,	1.3030	30.0300	1.110
1,000 to 1 ..	,,	0.0300	30.3030	1.111
1 to 1 instr. alone ..	1.0 ohm	∞	0.0000	0.000
5 to 1 ..	,,	0.2500	0.8100	0.000
25 to 1 ..	,,	0.4170	1.0083	4.975
125 to 1 ..	,,	0.0081	1.0419	4.999

* [This formula may be written

$$\frac{R}{r_g} - 1 = \frac{1}{K(K-1)} - \frac{1}{n(n-1)}.$$

Since the ideal is to make $R_t/r_g = 1$ this expression gives the error as a fraction, or, if multiplied by 100, as the percentage error. Since n is usually at least 5 or 10 times K, the second term is negligible and the percentage error is equal to $100/K(K-1)$. If $K = 5$ this gives an error of 5 per cent., whereas if $K = 10$ the error becomes 1.11 per cent. A comparison of these figures with those given by the authors in the last column of the table shows the accuracy of the approximation.—G. W. O. H.]

Digitized by Google

A New Theory.

The Effect of the Moon on Radio Reception.

By Derek Shannon (5PX). [R113.8

ONE of the outstanding problems still to be solved in connection with the transmission and reception of wireless or ether waves, is the effect experienced on long-distance reception of variation of signal strength from a given input power to the transmitter and stable and unaltered conditions at both receiving and transmitting ends.

For instance, a station will be received quite satisfactorily for a considerable period of time, perhaps for some weeks, and then for some unknown reason the signals from that station will become quite or nearly inaudible on the same receiver; this condition may last for some days, and then for no apparent reason the signal strength will again become normal, without anything having been altered in either transmitter or receiver.

This effect has nothing to do with the well-known phenomenon of increased signal strength at night, which is believed to be due to an ionised layer of gas in the upper atmosphere, known as the Heaviside layer, so called after the originator of this theory, the late Oliver Heaviside.

My purpose here is to suggest an entirely new theory to account for the cause of this variation in signal strength at different periods of time, of which nothing very much appears to be known.

I have carried out a great deal of experimental work to prove my theory, and I have now arrived at some definite results, which other workers in the field can follow up for the benefit of radio science.

I have noticed from time to time when listening to radio transmissions from distant stations that on very moonlight nights results always appear to be much better than at other times, especially on transmissions from American or other far-away stations. This led me to wonder whether the moonlight had something to do with this effect, so I commenced to make notes of good nights and bad nights for reception, and after a certain period of time I found that good reception always occurred during the period of full moon, even when locally the moon was obscured by clouds or bad weather.

So I have come to the conclusion that it is not the moonlight which has the effect of increased signal strength, but the rotation of the moon round the earth.

From observations I have taken on the reception of KDKA, the East Pittsburg station, U.S.A., at a distance of 3,500 miles, over a definite period of time using a very constant receiver and a special device for measuring the received signal strength, I have noticed that as the moon commences to decline from full so does the received signal strength also decline (this, of course, is in direct opposition to our present knowledge, that as the rays of the sun grow stronger over the path of the received signal, the strength of the signal declines). As the moon declines still further the signal strength diminishes and at the time when the moon is invisible, *i.e.*, when the moon is between the earth and the sun, the signal strength is at zero. As the moon begins to move towards the first quarter the signals show an increase in strength, at first slight, but rapidly increasing until about three days before the moon is full, when maximum strength is registered which remains until about three days past the full. Signals then begin to fade and the process is repeated through the next lunar month.

I will now proceed with the description of the apparatus used for these tests. There were many factors to be considered in the choice of a constant and stable receiver, and the problem was especially difficult on the short wavelength on which KDKA transmits, namely 63 metres. I finally decided to make these tests on this station, as it is a fairly constant transmission, and at a sufficient distance to make fading and changes

Digitized by Google

in signal strength apparent. After much consideration and many tests, I finally decided to use a simple one-valve circuit with two stages of low-frequency amplification. The greatest trouble I considered would be the use of reaction, which of course had to be used to enable reception to be obtained from KDKA.

However, I overcame this difficulty by using the Reinartz circuit and method of reaction control, and fitting it with a very fine screw vernier adjustment, and a fine scale with a pointer for accurate setting.

Once this was set at a critical point it was never touched again during the whole test period, and the set remained quite constant in its action. Also, the set was fitted with a filament voltmeter and ammeter and a plate voltmeter and milliammeter (Weston) to ensure always having the exact conditions in the receiver every time it was used.

The aerial consisted of a single wire L type 7/22, 50 ft. long with 20 ft. down lead, and 40 ft. high at both ends. The aerial was stretched as tightly as possible between the masts and kept strained by means of a weight on one halyard, so that no capacity change should take place due to the aerial swinging or otherwise moving. The aerial was aperiodically coupled to the receiver.

The earth connection was only 10 ft. long, single 14-gauge copper, taken straight to a main waterpipe right below the set. Every part of the apparatus was rigidly fixed to the test bench. No loose leads were allowed to hang about, and the whole of the wiring was done with 4 ft. of square tinned copper wire. V24 valves were used both for detector and low frequency. The low-frequency amplifier was used for listening to the transmission on phones. For the actual measurement of the signal strength an extremely sensitive mirror galvanometer was used.

The deflection was not very great, but was magnified by focusing the light spot on a special screen.

I so arranged matters that a full scale deflection of the light spot travelled over a scale of 10 inches. The screen was of ground glass with the scale marked on it, and divided into 10 divisions, each division being again split into 10, the object of this being to enable a graph to be prepared on a squared paper chart.

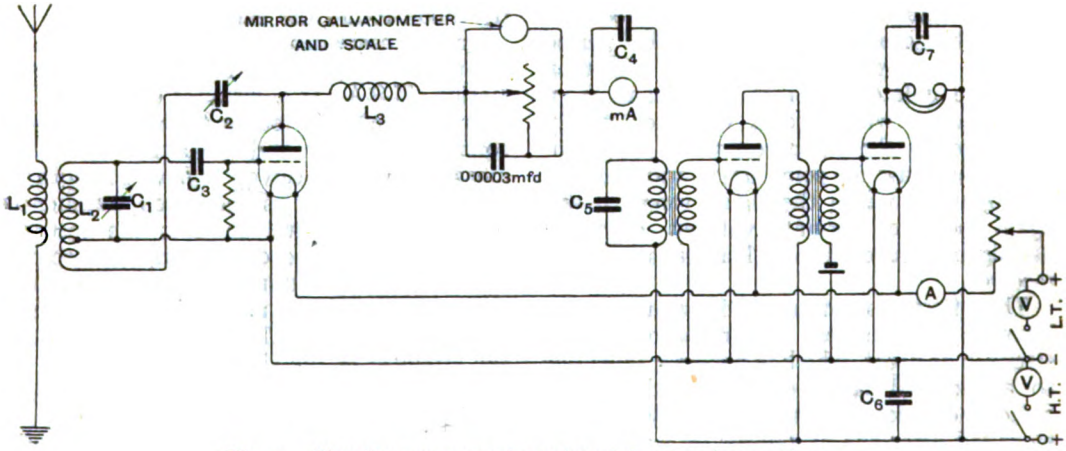

Fig. 1. Circuit arrangement employed for the observations.

The galvanometer was inserted in series with the plate of the detector valve, and shunted by a variable resistance to enable adjustments to be made. The light spot was then adjusted to zero on the scale with no signals coming in, but with the set switched on and tuned to 63 metres. When the carrier wave of the station came in, the galvanometer dipped, and the scale was so arranged that the dip showed as an increased reading, that is to say, the scale was arranged actually the reverse way round, so that the reading should commence from zero and finish at 10.

Digitized by Google

Fig. 1 shows the circuit arrangements.

When all was prepared a preliminary trial was made every night for one week to test if the apparatus would remain stable without adjustments, and this was found to be so, provided all values of voltage and current on filaments and anodes were kept adjusted exactly as when the apparatus was first set. A start was made on 10th January, 1925, at 11.30 p.m., this date being the night of full moon, and observations were taken until 12 o'clock. Slight variations took place during the half hour, but a reading was taken every five minutes, and an average was struck, this average being entered on the graph. This test was made every night until 8th February, the night of the next full moon.

Fig. 2 shows the graph of these observations.

A second test was made commencing on 23rd February, the night of the new moon, and continued every night until 24th March, the night of the next new moon. Owing to KDKA not transmitting on the short wavelength on Sundays, no reading is shown for this day.

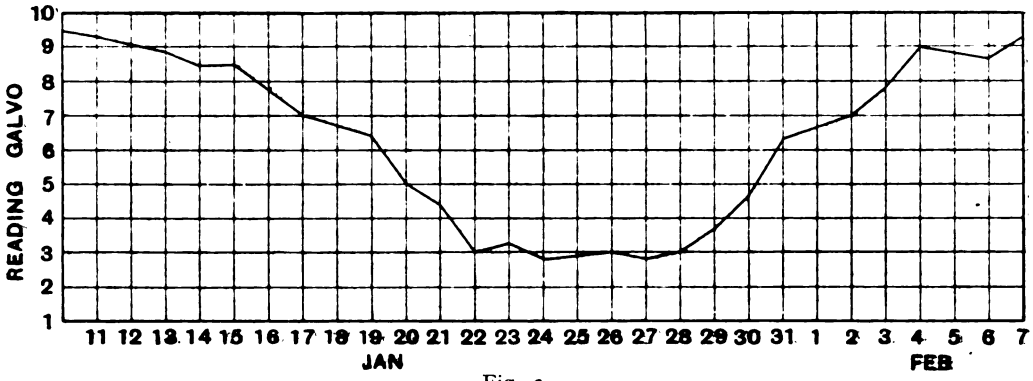

Fig. 2.

Fig. 3 shows the graph of these observations.

It will be noticed that in each case a rise in signal strength is indicated towards full moon, which falls off again as the moon declines. Of course the graph does not show a straight line up and down, but we must take into consideration the fact that slight alterations may take place in the actual transmitter, which would account for this, but this does not alter the fact that the strength rises as the moon increases and falls as the moon declines.

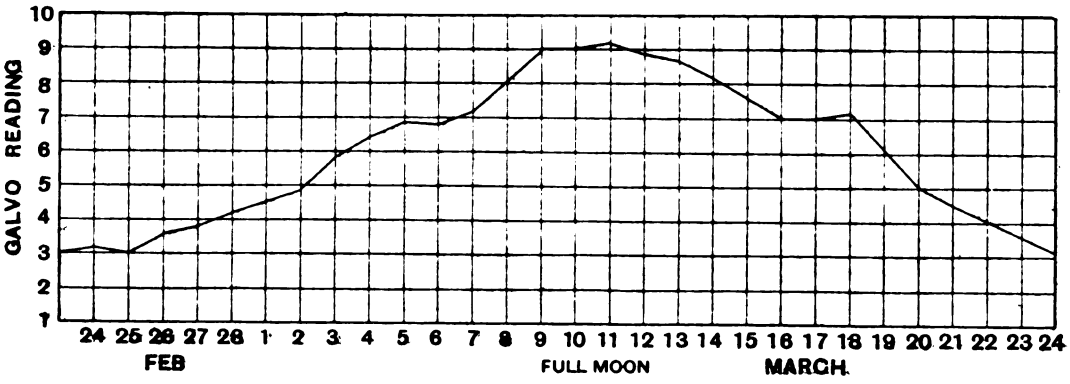

Fig. 3.

At the present time I am occupied in trying to devise a set with a number of

Digitized by Google

stages of H.F. amplification, and a carborundum rectifier in which no reaction will be used. This will be used on a higher wavelength, and I would suggest that anyone who wishes to carry out experiments in this line of research should proceed on these lines, as the elimination of reaction would remove the greatest variable factor. I would also lay great stress on the necessity of making everything as rigid as possible, and the whole apparatus must be untouched during the period of the test. I must also add that the readings indicate the carrier wave strength, and not the amount of modulation; this is very important, as the modulation of a telephone transmitter, especially at a broadcasting station, is constantly being altered, and would provide no indication of strength of reception.

On many occasions during these tests, the actual speech transmission was nearly inaudible, but the carrier wave was extremely strong. I mention this fact so that if anyone makes such tests they will take no notice of the actual strength of the speech or music received, but will only deal with the strength as actually shown on the galvanometer, which is the carrier wave strength.

Referring to the circuit shown in Fig. 1, the values of components used are as follows :—

L1—5 turns 16 D.C.C. Close wound on 3 in. former.
L2—10 turns 16 D.C.C. Close wound on 3 in. former. Reaction tap at third turn.
L3—200 Burndept plug-in coil.
C1—.00025 Sterling vernier.
C2—.00025 Sterling vernier.
C3—.0003 Dubilier.
C4—.002 Dubilier.
C5—.002 Dubilier.
C6—2μF Mansbridge.
C7—.002 Dubilier.
L.F. transformers (Ashley Wireless Telephone Co.)
Grid-leak. (.5 megohm.)
Valves. (V24 Marconi-Osram.)
Meters. (Weston.)
Filament voltmeter (0-6).
Filament ammeter (0-10).
H.T. voltmeter (0-100).
Plate milliammeter (0-15).

The mirror galvanometer must be of a very sensitive type, and the variable resistance placed in shunt must be of sufficiently low resistance to pass the plate current. Great care must be taken, when adjusting this resistance to obtain the zero reading, that the galvanometer is not burnt out; it is advisable to set the resistance at its lowest value so that the galvo is practically short circuited when first switching on the set.

The station required is then tuned in, and all meter readings should be carefully noted; then wait until the station has closed down, and adjust the galvanometer to zero by means of the shunt resistance.

When the next transmission takes place the galvanometer will read the strength of the carrier wave, and you can then make your tests night by night during the lunar month.

One more word of warning. When taking the readings of the galvanometer, it is advisable to stand as far away from the apparatus as possible in order that the set may not be affected by body capacity, as this would give a false reading.

I have spent many months making these observations, and have carefully checked the results of the nightly tests, and there seems to be no possible doubt that this effect is produced by the moon. I suggest that the variation of signal strength is caused by the gravitational effect of the moon and the sun, acting on the ether waves and bending or deflecting them from their course, in the same manner that light is bent or deflected by gravitation. This, of course, is for mathematicians to decide, and I only advance it as a probable theory which seems to be backed up by my actual observations.

A fact which, to my mind, helps to bear out my theory is that daylight reception is also affected and shows this increase and decrease, as the moon moves through her various phases. There is, however, one small factor which must not be overlooked, which is that usually during very bright moonlight nights the atmosphere is much more free from moisture than at other times; and this may have some bearing on the alteration of signal strength, by reason of the fact that the insulating materials used in the construction of the transmitter and receiver would be more efficient when free from moisture. But I do not think this is the reason, as even when the moon is full, we get bad weather

Digitized by Google

at times, yet the signal strength remains good when the moon is full even on damp nights. So I am led to the conclusion that the increase and decrease is due to the combined effect of the gravitation of the moon and sun, which as I have stated is backed by my actual observations and experiments.

I am at the present time engaged on a fresh series of observations, using more delicate and accurate instruments* for measuring and recording the variations of signal strength, and I am taking much greater precautions to exclude any factors which might give false results. I hope later to place on record the results of these further tests. However, in the meantime I hope these few notes will open a new field of radio research and will enable other investigators to follow up what may prove to be a help to the advancement of radio science. In conclusion, I would add that I have questioned a very large number of people as to whether they have noticed any definite period for this increase and decrease of signal strength, and in all cases I find they can call to mind that they have noticed a certain time period, but they have never attached much importance to it. One experimenter whom I questioned (who lives in North Wales on the sea-coast) did say he had always noticed a distinct rise in signal strength as the tide came to high water and diminished as the tide receded. This, of course, would point to some lunar influence, and I am perfectly sure that this influence plays a much greater part in radio reception than has hitherto been suspected.

* A suitable instrument for use as the plate galvanometer is the suspended moving coil; micro-volt-ammeter (ex-Government), which can be obtained from Messrs. Leslie Dixon & Co., 9, Colonial Avenue, Minories, London, E.1.

Wireless Aerials and the Landlord.

By a Barrister. **[R540.07**

THERE is, unfortunately, always a certain opposition set up against a new invention. There was a time when motorists were opposed by property owners and by magistrates who did not hesitate to express their public disapproval of "that noisome and loathsome disturber of the peace—the motor-car." And wireless experimenters will doubtless have their troubles of a similar kind until the voice of universal popularity drowns the cry of the opposition.

An instance of the type of difficulty that may be met with by the innocent listener-in is furnished by the disputes which are arising in certain quarters between landlords and their tenants. The landlords feel apprehensive that when a tenant puts up a wireless outfit some danger will result and damage will be done to the property. The attaching of wires to chimney stacks, fences, and trees is enough to cause alarm in the minds of some landlords, and among others there is the not uncommon fear that wireless apparatus attracts lightning and may become thereby a source of danger.

The landlords accordingly attempt to prohibit wireless fixtures of any kind, and seek to enforce the prohibition by threats of ejectment or increased rent. It is useful to inquire, therefore, what rights the landlord has in respect of a tenant's radio outfit, and how far the tenant can go without risk of legal action.

It should first of all be remembered that where a tenant has no written lease for a definite period of years, or is unprotected by the Rent Restrictions Acts, the landlord can, on giving proper notice (a month or a week, as the case may be), turn the tenant out without giving any reason at all.

And, of course, if the tenant has promised the landlord not to put up any wireless apparatus, or has accepted a lease containing a clause prohibiting wireless fittings, the tenant will be bound by such undertakings on his part, and can be sued for damages if he puts up any apparatus.

But in general a tenant to-day is either protected by the Rent Act and cannot be turned out, or he has a lease for a number

Digitized by Google

of years and, therefore, cannot be ejected until his lease ends or is terminated by some breach on his part.

Now let us see what breaches of the terms of a lease would be committed by a tenant who sets up a wireless aerial. It depends, of course, on the terms of the lease, but most leases have somewhat similar terms, namely, that the tenant shall keed the premises in "tenantable repair and condition," that he shall do no damage, that he shall insure against dangers of various sorts, and other terms of that nature.

In general, all these terms embody a promise by the tenant not to injure the property. And if these terms were not expressly agreed upon, they would always be implied. But it must be noticed that such terms do not protect the landlord against future damage. They only give him a right of compensation for damage which has actually been done.

So when a tenant puts up an aerial support and damages the property in doing so, the landlord can sue him for the damage, and can obtain from the court an injunction preventing the aerial from being put up again. But this action by the landlord can only be brought when damage has been done.

There may be cases where a landlord might bring an action to prohibit the continuance of a structure or of something which is bound to do damage ultimately. But it is not at all certain yet that the mere erection of a wireless aerial is bound to be a source of danger to property. Consequently, so long as a tenant does no actual injury, his wireless apparatus should be considered in the same class with domestic fittings which he has every right to put up so long as they are put up in a reasonable and proper manner.

With regard to insurance, this is a matter for the tenant in any case, whether he is under an obligation to insure or not. For if the premises are damaged, or struck by lightning, the tenant would in general be under an obligation to renew the damaged premises. So it is better to be insured against all risks. Some insurance companies make no objection to wireless apparatus, some make a small extra charge to cover whatever risk there may be. But it is better for the tenant to cover himself in every case.

Sometimes there is included in the tenant's lease a term forbidding the erection of any "building or thing" upon the premises. Such a term would, of course, cover a wireless mast and perhaps aerial wires. But a clause in the lease prohibiting building would not prohibit masts or aerials. Every tenant should read his lease carefully and see exactly what he has promised his landlord before defying him, or even before fitting an aerial.

This is especially necessary in the case of flats and tenement houses, where the terms are rather strict. It should be remembered that the tenant of a flat has only his own rooms and the outer walls of those rooms. The roof generally remains the property of the landlord. Consequently the tenant would have no right to go upon the roof, much less attach his wires to it. The same might also apply to semi-detached houses with a common chimney-stack, and the tenant of one house would need to get the consent of his neighbour before fitting the aerial supports to the chimney.

The case of a tenant of furnished rooms is somewhat similar to that of a tenant of a flat, but a distinction must be drawn between the tenant of a flat let furnished and a lodger who has his own room. A lodger in such a case has no rights over the premises and ought not to so much as stick a nail in the wall without the landlord's permission.

Wireless is, however, growing more and more popular and is beginning to be regarded as an object of domestic convenience if not a necessity to modern comfort, and most of the difficulties foreshadowed above will disappear as wireless gets more universal and as landlords and tenants in their tenancy agreements arrange terms which include the fitting of wireless apparatus.

Digitized by Google

Low-Frequency Intervalve Transformers.

Paper read by Mr. P. W. WILLANS, M.A., before the Wireless Section, I.E.E., on 2nd June, 1926.

[R132.1

Abstract.

THE paper gives a detailed consideration of the low-frequency intervalve transformer from the combined aspects of theoretical considerations, a method and result of experimental measurement, and the application of both to the actual design of a commercial pattern of transformer developed by the author. In the latter part of the paper notes are also given on various methods of connecting the transformer, especially with a view to an increased range of constancy of amplification.

After a brief note of previous work on the subject, the author reviews theoretical considerations. From discussion of Fig. 1 *

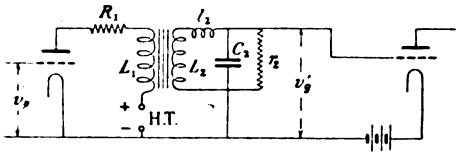

Fig. 1.

v_g = input sinusoidal voltage.
v'_g = output sinusoidal voltage.
R_1 = primary resistance.
L_1 = primary inductance.
L_2 = secondary close-coupled inductance.
l_2 = secondary leakage inductance.
r_2 = secondary effective resistance (shunt).
C_2 = secondary effective capacity.
m = valve magnification factor.
ρ = valve internal resistance.
σ = step-up ratio.

and its equivalent circuit, the following approximate expression is derived for the effective voltage step up:—

$$-v'_g/v_g = \frac{m\sigma}{1+\frac{\rho\sigma^2}{r_2}-\omega^2 l_2 C_2+j\rho\sigma^2\left[\omega\left(C_2+\frac{l_2}{r_2\rho\sigma^2}\right)-\frac{1}{\omega L_2}\right]}$$

Special cases are then discussed in detail under the general headings: 1. Loss-free close-coupled transformer; 2. Effect of damping on close-coupled transformers; 3. Transformer with magnetic leakage but no losses; 4. Transformer with both losses and leakage. The conclusions reached on the general theory and special cases are:—

1. The performance of a single-stage transformer amplifier may be expressed as a vector voltage amplification ratio, consisting of a fraction whose numerator is independent of frequency and whose denominator consists of a real part X and an imaginary part Y, both, in general, varying with frequency.

2. The imaginary term Y vanishes for a certain frequency (the resonant frequency) determined mainly by L_2 and C_2. The extent of variation on either side of this frequency is determined by the ratio C_2/L_2, the step-up ratio σ and the valve resistance ρ, the constancy being greater the smaller these quantities. The values of Y are identical for any two frequencies bearing inverse ratios to the resonant frequency. It is important that C_2 and $1/L_2$ should separately be made as small as possible. The value of σ can then be adjusted in conformity with ρ so that the required degree of constancy of Y is attained.

3. The real term X vanishes for a certain frequency which is dependent upon the secondary leakage inductance l_2, capacity C_2 and resistance r_2. The variation is steep above this critical frequency but tends to constancy at low frequencies. The lower the values of l_2, C_2 and r_2, the higher is the frequency for which X vanishes, but a low value of r_2 impairs the efficiency.

4. Since X is not governed by σ we cannot ensure constant amplification by a reduction in ratio. The best that can be achieved is the adjustment of σ until (X^2+Y^2) is constant over a band of frequencies, but the width of this band is determined by the degree of constancy achieved for X.

5. Setting aside the alternative of applying a damping resistance to the transformer

* The author's original figure numbers are adhered to throughout this abstract.

Digitized by Google

windings, the problem of design resolves itself into increasing L_2 to the utmost, and at the same time minimising C_2 and l_2. This necessitates a determination of the winding space occupied by the primary winding, but not of the number of turns with which this space is filled.

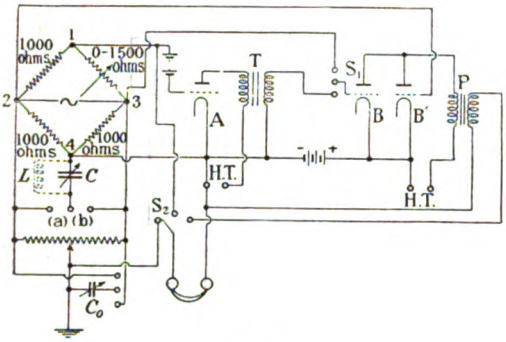

Fig. 3.

The paper next deals with experimental measurements and results. The method of measuring the performance of a transformer is shown in Fig. 3, where it will be seen that the method is a bridge one, employing a rule observation. By using the dotted inductance L, the CL circuit can be used with the bridge for frequency determination. By setting S_1 to its upper position and S_2 to its right-hand position the connections of Fig. 5 are utilised for balancing the two valves B and B', the filament of one or the other being varied until extinction is

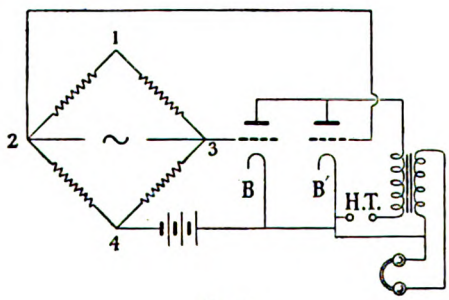

Fig. 5.

obtained. Earth balance is effected on the Wagner principle by the variable resistance and C_0 and measurement finally adjusted. With S_1 and S_2 in their lower and right-hand positions respectively, the connections of Fig. 6 are given for final measurement of the ratio v'_g/v_g. This ratio is equal and opposite to the ratio of the voltage across the arm 2—4 and that across 1—4, and is given by

$$-\frac{v'_g}{v_g}=\frac{R'+R}{R'-R-j\omega R^2C}$$

and

$$-\frac{v'_g}{v_g}=\frac{R'+R}{R'-R+\omega^2R^3C^2+j\omega R^2C}$$

according to whether the condenser switch is at (*a*) or (*b*). Calculation of the scalar amplification and of phase angle are also illustrated in the paper.

During the course of the work, a large number of transformers were tested. Some were already on the market, others were tentative designs, while others were actual samples drawn from production of the final design adopted by the author's firm.

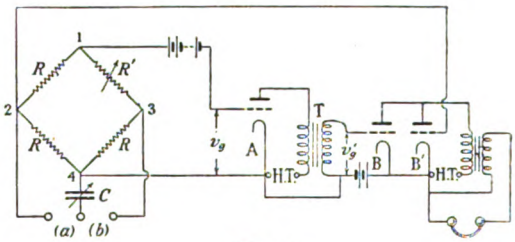

Fig. 6.

A specimen tabulation of results and the method of calculating the scalar amplification factor and other functions of the transformer constants are shown in a table. A set of results are shown graphed in Fig. 7.

The author then describes a low-leakage transformer developed by himself in conjunction with Mr. M. Ward, B.Sc. Both l_2 and C_2 had to be minimised, the former being a point that had not previously received sufficient consideration. In order to reduce leakage inductance the customary method of divided and interleaved windings was adopted. The first attempt, without special precautions, gave too high mutual capacity. The sections were accordingly spaced apart until no appreciable gain in this respect was obtained by further separation. The result was a transformer having the characteristics shown in Fig. 10.

A sectional view of the transformer is shown in Fig. 11. The sections C each consisted of about 5,000 turns of 44 S.W.G.

Digitized by Google

enamelled wire, while the gauge and number of turns of the section *B* varied according to transformer ratio. Separation of sections was effected by means of the star-shaped millboard separators shown. Four different ratios were specified, *i.e.*, 2.7 : 1 for a 40,000 ohm valve, 4 : 1 for a 16,000 to 18,000 ohm valve, 6 : 1 for a 7,000 ohm valve, and 8 : 1 for a 4,000 or 5,000 ohm valve.

The defect of the transformer characteristic is its inefficiency at lower frequencies, which has been made good in a later design.

Arrangements are also described and illustrated for the use of the bridge arrangement for the determination of the voltage factor *m* and internal impedance ρ of the valve. In a section on the choice of a valve, it is concluded that considerable gain is to

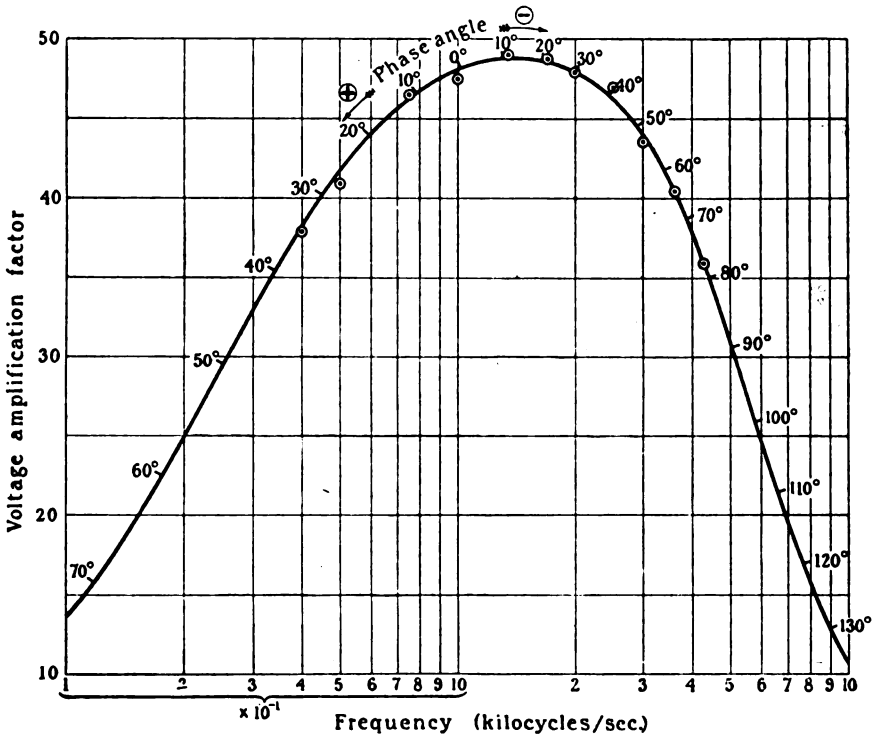

Fig. 7.

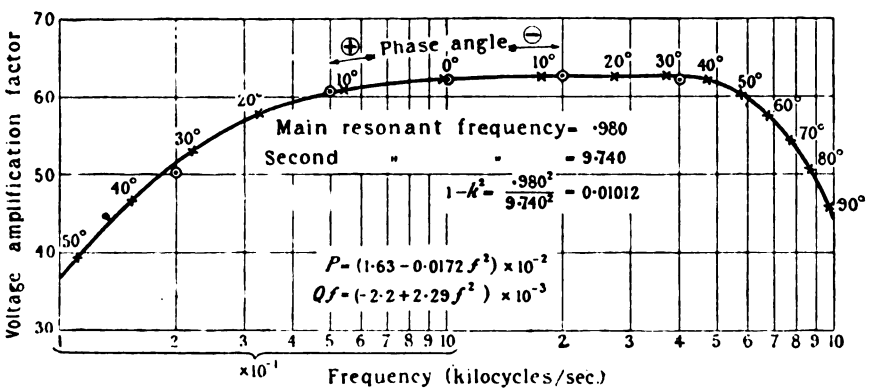

Fig. 10.

Digitized by Google

be expected from the employment of a valve of high amplification factor and a transformer of conservative step-up ratio. As an offset, however, it is a matter of great difficulty to produce such a valve with a sufficiently straight characteristic to avoid asymmetric distortion at the high and low frequencies respectively. Such a valve is therefore of greater advantage in the earlier stages of an amplifier where the voltage is small.

The effect of inter-electrode capacity is then considered, especially from the standpoint of the impedance introduced into the

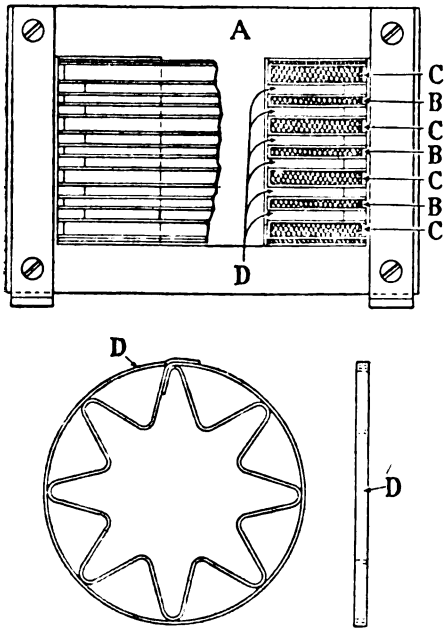

Fig. 11.

grid circuit by the reactive effect of this capacity. It is shown that this impedance consists of two parallel branches: (*a*) A capacity equal to C_0 (the anode-grid capacity) which can be counted as part of the transformer capacity, and (*b*) an impedance that can be represented by a condenser of value mC_0, in series with a resistance the value of which varies with frequency and may be positive or negative. This resistance has zero value at the resonant frequency of the transformer, is negative below this frequency, and positive above it, remaining positive however high the frequency is raised. In the absence of magnetic leakage the only effect of any consequence is at high frequencies. With magnetic leakage (as l_2 of Fig. 1), if $l_2C_2\omega^2>1$ the resistance is again negative, and may give regeneration at higher frequencies. This appears to be the cause of whistling and distortion on the upper frequencies that is sometimes encountered.

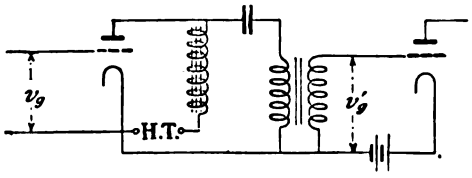

Fig. 15.

Finally, the author, devotes a section to various intervalve transformer connections. The primary series condenser circuit of Fig. 15 is described, the anode here being fed through a choke coil. The equivalent circuit is discussed, and an expression derived for the amplification. From this it is concluded that the disadvantage of the arrangement would appear to be an increased tendency towards asymmetric distortion at low frequencies, although test results quoted in a table shows considerable uniformity of scalar voltage amplification over the range 200 to 1,000 cycles.

The use of low frequency reaction is illustrated in Fig. 17. The transformer windings are oppositely connected so that σ is negative, and L_0 should be arranged so that its impedance at practical low audio-frequencies is large compared with R. In practice L_0 may be fixed and R a variable

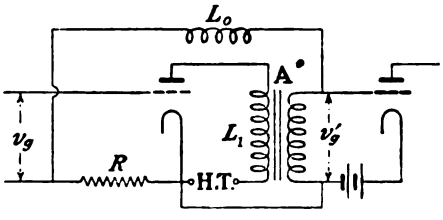

Fig. 17.

resistance of the graphite leak type. The arrangement gives a good range of constant amplification, experimental results on this point being shown in a table. The circuit is quite workable in practice. If R be increased, a setting is reached where oscillations occur

Digitized by Google

on a very low frequency. On setting R to a value close to but definitely below this point, a stable arrangement is obtained, with a great increase in the lower frequency amplification.

The last arrangement discussed is an auto-transformer circuit shown in Fig. 18, due to Messrs. Graham & Ricketts. The connection is such that σ is positive, and

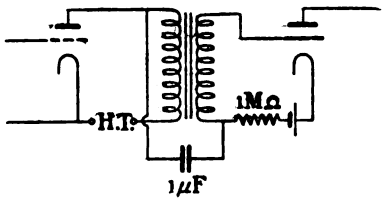

Fig. 18.

the effect of the arrangement is roughly to increase σ to $(\sigma + 1)$. Results of measurements, shown in a tabulation, reveal a fairly flat-topped curve of amplification.

DISCUSSION.

Mr. P. K. Turner thanked the author for the excellent detailed work on transformers, and congratulated him on the fact that by his work he had achieved a transformer giving results formerly considered impossible. He criticised some of the symbols used in the mathematical work as being non-standard, and sought information on the values of magnetisation encountered in such transformers. He considered that a fundamental objection to the bridge method of measurement was that it had no A.C. load in the anode circuit of the valve joined to the transformer.

Mr. H. A. Thomas said that Mr. Turner's reference to the bridge method had covered some of his proposed remarks, notably as regards the absence of load in the output valve. He had tried a similar bridge method and quoted changes which he had observed according to the conditions of experiment, and sought information from the author on this subject.

Mr. H. L. Kirke dealt with the series condenser system, especially from the point of view of amplifiers working to land lines for broadcast relay. The arrangement had proved very free from distortion. Iron distortion was also non-apparent if certain values of magnetisation were used.

Mr. C. G. Garton spoke of transformer design with large leakage and large self-capacity. With these it had been found possible to get a flat curve up to 5kC, while the arrangement was less expensive. He strongly maintained the soundness of the bridge method with no reactive load. This gave a measure of the effect of the transformer, which was the chief point of measurement.

Mr. C. F. Philips considered the bridge method elaborate and involving much calculation for the arrival at results. He outlined a double slide-back system for giving stage magnification, which he said gave good results and was easy and convenient in practice.

Dr. R. L. Smith-Rose congratulated the author on the rational and scientific manner in which he had tackled the problem of transformer design. He asked for information as to the lowest frequency used for test, pointing out the need for improved features of the curve below 250 cycles. Considered on a pitch basis this was very important. The existence of load in the second anode gave a measure of complete amplifier performance, and the chief necessity was not merely for a transformer but for a total amplifier giving linear response.

Mr. Willans briefly replied to some of the points raised. He particularly defended the bridge method as showing the transformer performance and permitting the sorting out of different effects. In practice, it had shown great constancy of results and close agreement between theory and experimental verification.

On the motion of the Chairman (Major B. Binyon) the author was accorded a very cordial vote of thanks.

Digitized by Google

Constructing a Self-Contained Ballistic or Deadbeat Spot Galvanometer.

By F. A. Boyce. [R384.6

SPOT galvanometers on the second-hand market are eagerly snapped up, while new ones of the ordinary deadbeat type range from £15 to £25; it appeared, therefore, worth while to construct one. By so doing one could at any rate incorporate one's own ideas.

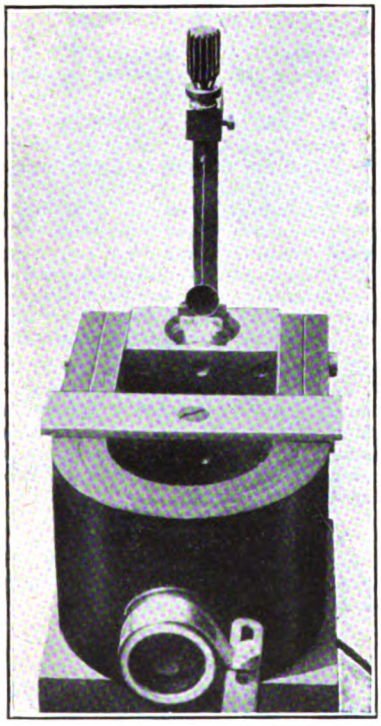

Fig. 1.

Apart from being inexpensive the galvanometer to be described has several outstanding advantages :—

1. *Self-contained.*—That is to say, no external focused beam or scale is required. The spot-light is permanently focused upon a ground glass screen forming part of the containing cabinet, 10 inches from the mirror.

2. *Ballistic or Deadbeat.*—Spare bobbin units are unnecessary. The instrument is converted from ballistic to deadbeat and *vice versa* by a switch on the front terminal panel.

3. *Simplicity.*—Skill is of less importance than patience in its construction.

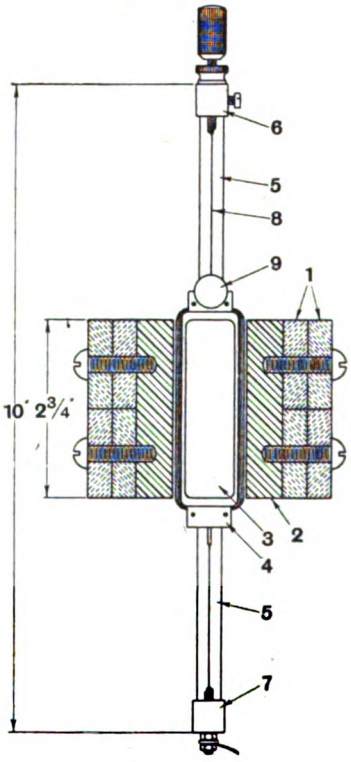

Fig. 2.

The suspended coil type of galvanometer with a taut wire at the top and a loose connecting wire below is extremely susceptible to mechanical jars; moreover, levelling screws must be provided to obtain freedom for the coil. The galvanometer under consideration has, however, taut wires both top and bottom and once set up takes very rough treatment to disturb its action.

Digitized by Google

The general assembly is clearly shown in Figs. 1 and 2; the parts in Fig. 2 have been numbered and are described in detail subsequently.

Item 1.—**The Magnets.**

There are two magnets, each made up of two laminations three-eighths of an inch thick. The whole was bought from a "surplus" dealer for 2s. 6d., which, we should imagine, is the lowest figure one can expect to give.

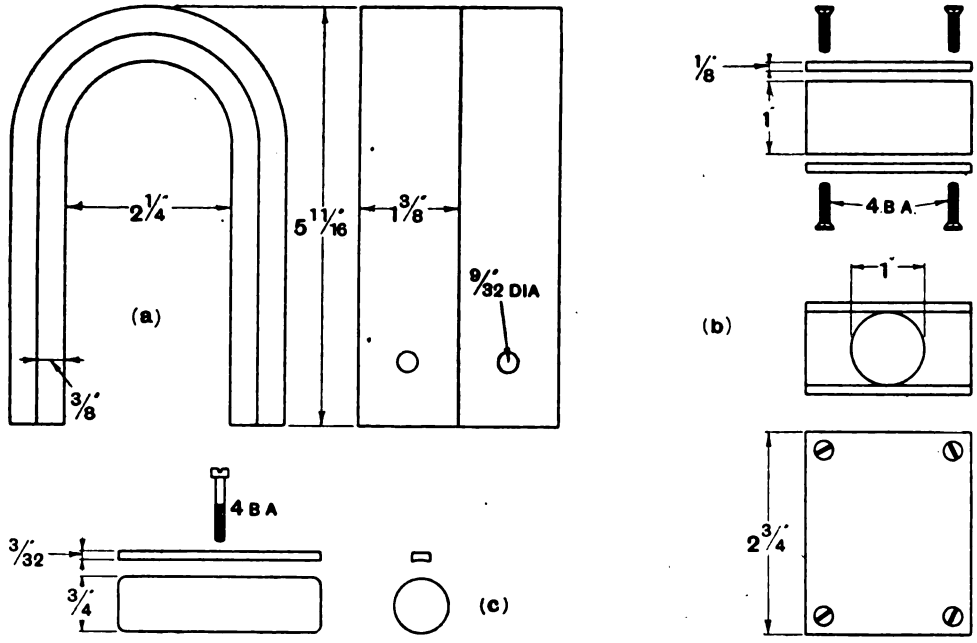

Fig. 3.

It would appear that sizes are more or less standard, the dimensions of succeeding items therefore have been given in order that the original may be followed if desired without modification.

Apparently the degree to which the original magnetism is retained is not important, since before the galvanometer is finally assembled the magnets can be re-magnetised for two shillings or thereabouts. On the other hand, it is essential to select magnets having convenient fixing holes; this should not be difficult.

Item 2.—**Pole Shoes.**

A piece of 1-in. mild steel was next obtained from a local engineer; this was squared up to 2¾ by 2¼ inches to fit exactly between the poles of the magnets, and then left in a dying fire to anneal. Two ⅛-inch brass plates were cut and squared to the same dimensions and fixed to the steel by the method shown. In this connection it is important to fix the centres of the screws so as to avoid the side screws which hold the steel to the magnets.

The marking out to exact centre, drilling or boring of the central 1-in. hole through 2¾ inches should be done accurately; in fact, it is probable that the time expended by oneself on this job is out of all proportion to the labour charge of an engineer who has a precision lathe amongst his equipment.

After the side fixing holes have been drilled and tapped ¼-in. Whitworth, the plates can be removed and the sharp edge filed away from the shoes to the ¾ inch given in the sketch.

Item 3.—**Central Core.**

This is also mild steel, turned from rod, and placed, like the shoes, in a dying fire to soften. A single fixing hole was used.

The core is seated upon a distance piece shaped from brass 3/32-in. thick to ⅛-in. at the middle line. When later assembling, a

Digitized by Google

screw of such a length must be chosen that it will pass through the arm (Item 5) and one of the brass plates of the pole shoes (Item 2), as well as the distance piece mentioned.

Item 4.—**The Bobbin.**

Bobbins of insulating material and of metal were tried, as well as the alternative—a former wound coil—but it was decided that a carefully constructed former of relatively substantial aluminium was the best in order to obtain uniformity and balance throughout. Hard sheet aluminium $\frac{1}{64}$-in. thick was

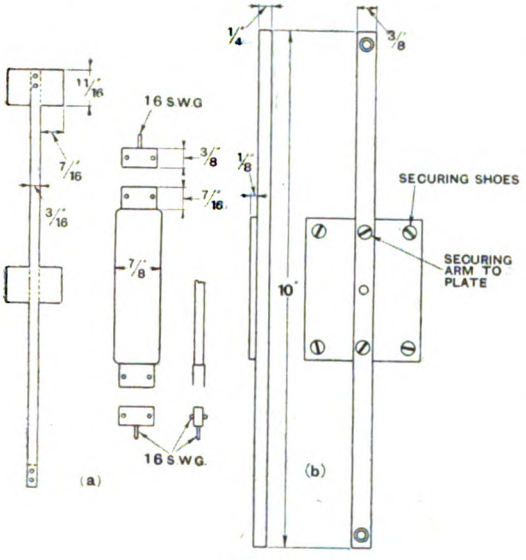

Fig. 4.

obtained and carefully marked out as shown in Fig. 4 (*a*). A sharp knife was used on the narrow parts and shears with extreme discretion on the end pieces. Two small rivet holes were made to coincide and tiny lead rivets used for fixing.

Two pieces of high grade ebonite were next squared up to fit between the projections on the aluminium former, and when assembled should leave a winding space of at least $\frac{1}{16}$ in.

The pivot pins as well as the cross rivets are of 16 S.W.G. brass wire. If a No. 52 drill be used it will be found that the wire pins can be driven home by gentle taps of a small hammer. Accuracy is essential, of course, in fitting the pivot pins, but the side holes, for holding pins only, can be drilled with the ebonite in position.

The bobbin should be examined before winding, in order to make sure that it is rigid and well balanced. The balance can be more or less tested by pressing the bobbin by the pivots lightly between the thumb and second finger and causing it to spin by a tap on one edge. Thus far, the side pins may be drawn out and the aluminium given a heavy covering of shellac, left to dry and finally baked.

The winding consists of 250 to 300 turns of 44 S.W.G. enamelled wire. The long sides must be watched closely to see that no turns slip over the edge. An ebonite former was made to fit snugly inside the bobbin, and through a central clearance hole a length of 4 B.A. studding was inserted, while a nut on either side held the former squarely in position. A small hand-drill was mounted in the vice to take the other end of the studding. After testing for continuity the end pieces were reassembled, the wire ends soldered to the pivot pins and the bobbin covered with shellac and baked again.

Item 5.—**Suspension Arm.**

A straight 10 inches of square section brass rod ($\frac{3}{8}$ by $\frac{1}{4}$ inch) was drilled with five clearance holes, the dimensions and details of which are clearly shown in Fig. 4 (*b*). It will be seen that the arm is fixed to one of the shoe-plates; marking-out, drilling and counter-sinking of the arm, and the tapping of two holes in the plate again obviously calls for accuracy.

Items 6 *and* 7.—**Suspension Blocks.**

These are of brass to the dimensions given in Fig. 5(*a*), $\frac{1}{2}$-in. square section, recessed at one end to fit closely over the suspension arm, while at the other a hole is made the centre of which is located exactly over the centre of the space between the pole shoes.

The assembly of the top block is also shown in Fig. 5(*a*). The ebonite knob and terminal top can, of course, be any other shape than that shown so long as the latter runs easily, but without side play over the 4 B.A. studding which passes through a clearance hole in the block. The side set screw is useful for securing the adjustment.

Particular note should be made of the lower end of the studding which is filed flat to its centre and tinned in readiness for the torsion wire or strip.

The suspension block (Item 7) at the lower

Digitized by Google

end of the arm differs somewhat in detail from the top member. The clearance hole has been widened to take the studding, which is inserted into a short length of Sistoflex or other good insulating sleeving having fairly thick walls. At the same time two locking nuts, having between them a light soldering tag, butt against two ruby mica washers, thus insulating the studding and fittings from the block. The studding at this point is also filed to its centre to receive the wire.

When the instrument was finished it was found that considerably more thought could have been given to the design of the top

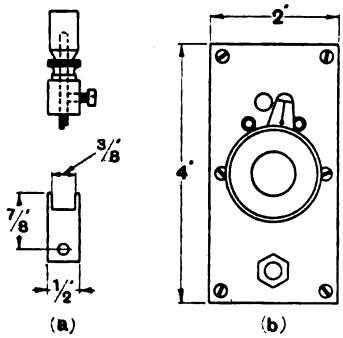

Fig. 5.

block to facilitate adjustment of the bobbin to give a spot at central zero. However, setting is not troublesome as it stands.

Item 8.—**Suspension Wires.**

For the purpose of the initial assembly and try-out, 44 S.W.G. bare wire can be used to suspend the coil between the pole shoes only. If the work has been accurately carried out and the winding nicely packed the bobbin will swing freely. On the other hand, there may be one or two mistakes to rectify with a half-round file applied lightly to the inner sides of the shoes. In such a case one must not forget the filings, which perhaps will not be noticed until the magnets are added and may be found to block completely the free action of the coil. Later, wire or strip for the suspension can be fitted as required according to the sensitivity sought.

Certain grades of tinsel are obtainable which are composed of plated copper strip, and the micrometer gives the thickness as 0.02 mm. with a width up to 0.5 mm.

The tinsel was tried for suspensions both top and bottom, and it was gratifying to find that the galvanometer was extremely sensitive though requiring very careful adjustment to prevent the coil fouling the pole shoes. It was then realised that if a break occurred while the instrument was in use a great deal of time would be wasted in readjustment, and since the aim was to obtain nearly one centimetre per microampere it appeared that some metal could be spared from the shoes. The central hole, therefore, was increased by one-eighth of an inch, this being accomplished in a lathe by packing up the side plates to give clearance to the tool, otherwise, of course, the plates would have been cut away.

Such an increase appears to be a drastic measure, but it followed on observations taken. The scale was marked in 0.5 centimetre divisions with the intention of adding millimetres later.

Reassembling, using tinsel drawn taut both top and bottom, a deflection of $2\mu A$ per cm. was obtained deadbeat, and as a ballistic instrument the coil had ample room; moreover, the instrument required to be levelled approximately only. Further, deflections taken to the right and left of zero tallied beautifully.

It is recommended, of course, that the metal parts be lacquered or protected by any other means. The brass can be treated with hot or cold lacquer, while the mild steel can be blued or blue-lacquered.

Item 9.—**The Mirror.**

This was purchased from Messrs. Negretti and Zambra for 4s. 9d., and it is understood that they made two or three for stock when supplying the original. The mirror is half an inch in diameter, having a focal length of 10 inches. The top of the bobbin was covered on the front lightly with shellac and the mirror pressed upon it, in a very short time the shellac was tacky enough to allow the mirror to be adjusted correctly.*

Cabinet and Fittings.

The drawing of the cabinet was entrusted to Mr. Carrington, of the Carrington Manufacturing Company, Normans' Buildings, Central Street, E.C. The finished article

* [This method of fixing is likely to lead to distortion of the mirror, giving a very bad spot. A better way is to make a small aluminium foil clamp.—Ed].

Digitized by Google

was found to be exactly to dimensions given in the accompanying sketch (Fig. 6), together with a wooden block measuring 4 by 4 by 5¼ inches.

The cabinet is of ⅜-inch polished teak with the exception of a teak-finished 5-ply back board. The top is fastened with wood screws through brass bushes, and is therefore removable as required. At first sight such a construction appears to be weak, but it must be remembered that at no time will the instrument be roughly handled, and except for the fitting of the parts, the top will always be on.

There is an aperture of 1 inch across the top of the front, the exposed edges being grooved to take a strip of finely ground glass. The latter was marked off in 0.5 and 1 cm. divisions, and no difficulty was experienced in printing the figures backwards. It did not appear necessary to use a fixing solution since the ground side of the glass is inside and the Indian ink can come to no harm.

Also, on the front is a small ebonite panel which carries a two-way switch, a telephone jack, and, at the back, a batten holder for a small screw-type lamp. Fig. 7 shows the general location of the panel, while the sketch Fig. 5(*b*) gives outside dimensions. When cutting away the box in front to take the panel ample holding space for the wood screws must be left.

Though the bobbin in itself is a short-circuited turn of generous cross sectional area the currents set up therein do not react sufficiently on the field to render the action deadbeat, it is therefore necessary in this particular instrument to provide an external load in the form of a non-inductive resistance. Six yards of 42 s.w.g. covered Concordin was used, having a resistance of 813 ohms, wound back on itself in the usual way, arranged as a shunt to be thrown in or out of use by the switch mentioned above. The ballistic stud of the switch is blank, of course. In this case the shunt reduces the deflection for a given current by 25 per cent., but it kills any oscillation of the bobbin instantly; moreover, the actual resistance is not critical. If one seeks, therefore, to make the galvanometer deadbeat to a reasonable degree only, an adjustment of the resistance when first assembling provides means to set the deflection to multiples of a centimetre to coincide with multiples of a microampere.

The lamp is the ubiquitous 4½-volt flash

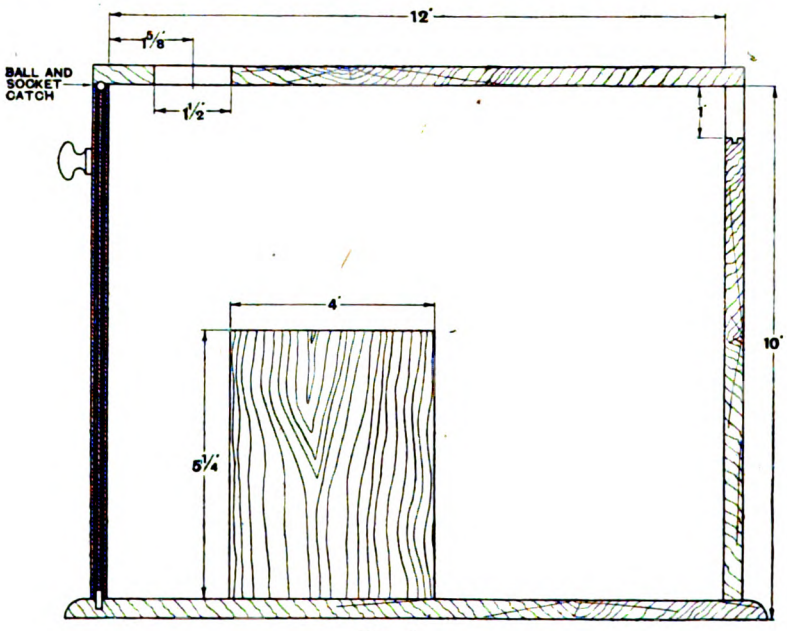

Fig. 6.

Digitized by Google

type fed by an Ever Ready battery of generous capacity held inside and against the side of the cabinet by a brass strip and two wood screws.

A plug-and-jack connection to the galvanometer does duty in three ways. First, the double contact is utilised to give direct connection from the galvanometer to external instruments; secondly, the act of inserting the plug switches on the filament current to the lamp by the usual method of a double

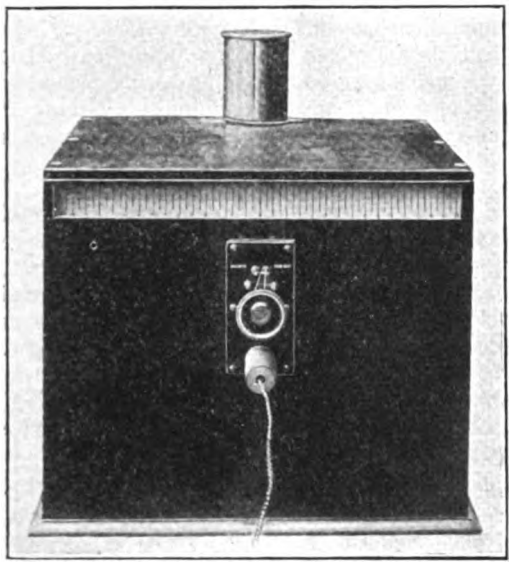

Fig. 7.

circuit jack, and finally, by no means the least important, the method itself provides protection to the instrument since an accidental tug on the flex simply pulls out the plug. The capacity of the flex itself does not matter, for when taking observations of resonance curves and the like it is usual to shunt the galvanometer leads with a condenser.

The insulating properties of the distance pieces used in the construction of the jack must be carefully watched. It is essential to get a jack of good quality. The first one tried in this case leaked, upsetting readings to the extent of one and a half microamperes.

The Focus.

For the spot light upon the ground glass screen we have not attempted to project a moon bisected by a sharply focussed hair following, we believe, the usual practice. A watchmaker's glass of 2½-in. focus has been strapped and mounted on a slotted brass arm. The lens itself has been covered with tinfoil across which was carefully drawn a knife, which procedure gives a hair line of brilliant light upon the scale; in fact, the line of light is no thicker than the division lines.

Finally, a brass cover was added to protect the top adjustment. The item seen in the photograph is perhaps of larger diameter than necessary, but the tube and other brass were to hand, and it must be added that after fixing it will be found that in removing the cover from its push-fit base there is always a final jerk, so that if the tube were smaller the top suspension would probably suffer.

General Remarks.

In experimental work a spot galvanometer is essential. Its obvious D.C. job is in the measurement of high resistances or leakage paths by Ohm's law, or as a sensitive balancing galvanometer used in conjunction with a Wheatstone bridge.

It is admirably suited to work in the measurement of inductance and capacity at radio frequencies. The personal element present with telephones is eliminated by placing the deadbeat instrument in series with a carborundum detector or valve rectifier (no H.T.), the outside terminals then being connected across the circuit to be measured. Care must be taken to make the galvanometer circuit of as high a resistance as possible consistent with a readable deflection. A calibrated valve oscillator set up and coupled loosely to the circuit under test completes such an arrangement. Knowing the wavelength, capacity and inductance values can be calculated; this test at once suggests others involving the same terms. In the plotting of resonance curves for the calculation of high frequency resistance the galvanometer is invaluable.

On the ballistic side, the logarithmic decrement can be calculated from observation and the capacity of a condenser determined absolutely, or commercial results obtained by comparison with a standard.*

* Two ballistic uses, the above and the measurement of mutual inductance, are given in *The Calculation on Measurement of Inductance and Capacity* (Nottage), Chaps. 4 and 3 respectively.

Digitized by Google

Mathematics for Wireless Amateurs.

By F. M. Colebrook, B.Sc., A.C.G.I., D.I.C. **[510**

(*Continued from page* 378 *of June issue.*)

(D) The Fundamental Laws of Algebra. Multiplication.

BEFORE plunging into this subject the writer would like to anticipate a criticism which is likely to be brought against this and perhaps some other parts of the series, namely, that a deal of breath is being wasted in expounding the obvious and the familiar. For instance, the conclusion

$$3\times4=4\times3$$

may be regarded as a poor return for the investment of a large number of words. There are probably many readers who will say or think, "I know all about simple multiplication. Let's get on to the calculus." The implicit assumption that one needs to know all about multiplication before going on to the calculus is right enough, but such readers are invited to reconsider the first part of the statement. Anyone who knows all about multiplication should be able to give clear answers to the following questions and to many like them :—

1. Since one can multiply volts by amperes and call the product "watts," can one multiply oranges by apples? If not, why not?

2. Since one can multiply inches by inches and call the product "square inches," can one multiply apples by apples and call the product "square apples"? If not, why not?

3. Can one multiply a number by a negative number? (The writer would be prepared to offer long odds against this one being answered correctly.)

The following discussion of the subject is recommended to the attention of all those who feel at all uncertain about the answers to the above questions.

Multiplication in algebra is a generalisation of the corresponding process in arithmetic. Let us therefore go back for a while to the multiplication tables: $3\times5=15$. Three multiplied by five is fifteen. We learned it by heart a long while ago and have probably never given it another thought. Giving it another thought, we realise that it means

$$3\times5=3+3+3+3+3=15,$$

i.e., five groups of three ones combined together make up the group that we have agreed to call fifteen. In other words, multiplication *is* addition, a rather special case of addition in which all the numbers added together are the same as one another. We owe a great deal to the ingenious person (probably a Greek or an Arab) who realised that this special case of addition could be written down in a very short way.

Expressing the process in algebra terms, *i.e.*, by means of letters which for the present will be taken to mean any *positive* whole numbers,

$$a\times b=a+a+a+a \quad . \quad . \quad .$$

written down b times.

Notice that although a and b are both numbers in the case of pure arithmetical multiplication, there is a difference between them when the process refers to groups of things, which things must of course be things all of the same kind, whether volts, amperes, cabbages or kings, "a" is the number of things in each group, and "b" is the number of groups, so that $a\times b$ means "b" groups of "a" things. On the other hand $b\times a$ means "a" groups of "b" things. We can see that the total number of things is the same in the two cases. Starting with "b" groups of "a" things, take one out of each group. This will give one group of "b" things, and since this process can be repeated until all the "a" things in each group are used up, *i.e.*, "a" times, the final result of

Digitized by Google

the rearrangement will be "a" groups of "b" things. In symbols this is

$$(a \times b) = (b \times a).$$

It is one of the most important properties of the process of multiplication and is called the Law of Commutation. In $(a \times b)$, "a" is called the multiplicand and "b" the multiplier. $(a \times b)$ is called the product of "a" by "b." In practice the explicit multiplication sign or St. Andrew's Cross is often omitted or replaced by a dot, thus—

$$a \times b = a.b = ab.$$

The product $(a \times b)$ can be considered as a single group and as such can be multiplied again, *e.g.*, $(a \times b) \times c$. Further, it can be shown that

$$(a \times b) \times c = a \times (b \times c).$$

The proof is not immediately obvious, but it will not be given in full as it would take up rather a lot of space. The easiest steps are

$$(a \times b) \times c = (b \times a) \times c.$$

By writing out the right-hand side fully and by regrouping the symbols, it can be shown that

$$(b \times a) \times c = (b \times c) \times a$$
$$= a \times (b \times c)$$

so that

$$(a \times b) \times c = a \times (b \times c)$$

or

$$(ab)c = a(bc).$$

This is known as the Associative Law for multiplication. By combining this with the Commutative Law it can be shown that—

$$abc = bca = cab = cba = \text{etc., etc.}$$

and since the whole argument can then be repeated with $(a \times b \times c) \times d$ and so on indefinitely, we may say at once that *the result of multiplying together any number of positive whole numbers is independent of the order in which the operations are performed.*

Returning to $a \times b$, suppose a is the sum of two numbers c and d, *i.e.*,

$$a = c + d$$

Then

$$a \times b = (c+d) \times b$$
$$= (c+d) + (c+d) + (c+d) \quad . \; . \; .$$

written down b times.

Therefore by the Associative Law for addition—

$$(c+d) \times b = (c + c + c + c + c + \; . \; . \; .$$
$$\text{written down } b \text{ times})$$
$$+ (d + d + d + d + d + \; . \; . \; .$$
$$\text{written down } b \text{ times})$$
$$= (c \times b) + d \times b)$$

and since

$$(c+d) \times b = b \times (c+d)$$

we have

$$b \times (c+d) = (b \times c) + (b \times d)$$

or

$$b(c+d) = bc + bd.$$

This is known as the Distributive Law, for a fairly obvious reason. The process can clearly be continued. Thus if, in the above,

$$b = e + f$$
$$b(c+d) = (e+f)(c+d)$$
$$= (e+f)c + (e+f)d \text{ as already shown.}$$
$$= ec + fc + ed + fd.$$

The general character of the process will not be expressed in words. It would take too long. The algebraic symbols tell the whole truth much more concisely.

(D1) Multiplication and Negative Numbers.

In terms of the original definition and of the interpretation which has already been found for $-a$ (see para. 3B) the meaning of $-a \times b$, where a and b are positive whole numbers, does not present any difficulty, for

$$(-a) \times b = (-a) + (-a) + (-a) + (-a \quad . \; . \; .$$
$$\text{written down } b \text{ times})$$
$$= -(a + a + a + a \; . \; . \; . \text{ etc.,}$$
$$\text{written down } b \text{ times.})$$
$$= -(a \times b)$$

But what is $a \times (-b)$? According to the original definition it would be

$$a \times (-b) = a + a + a + a, \text{ etc.,}$$
$$\text{written down } -b \text{ times.}$$

But this does not mean anything. It is literally nonsense. Nor can we get over the difficulty by writing—

$$a \times (-b) = (-b) \times a = -(b \times a)$$

for this law was only proved for positive numbers. Actually there is no way out of the difficulty, or rather, there is no difficulty. There is simply the plain statement that one

Digitized by Google

cannot multiply a number by a negative number.* (See question 3, para. D.) But then, who wants to?

It is true that later on there will often be occasion to pretend to multiply by a negative number. For instance, a number "a" can be multiplied by "b" giving $(a \times b)$. Its sign can then be reversed, giving $-(a \times b)$. To save time this can be described as multiplying by $-b$, but actually it consists of two quite separate operations. To take another example, if

$$x = y$$

multiplying each of these equal numbers by a gives

$$x \times a = y \times a$$

or

$$ax = ay$$

If these positive numbers are equal the corresponding negative numbers will also be equal, *i.e.*

$$-ax = -ay$$

Now the same true conclusion can be reached by assuming that the Law of Commutation applies to multiplication by a negative number, in which case a meaning can be found for multiplication by a negative number as shown above. Thus, since

$$x = y$$

$$x \times (-a) = y \times (-a)$$

i.e.,

$$(-a) \times x = (-a) \times y$$

or

$$-ax = -ay.$$

Actually the writer has never yet come across any case in which the application of the laws of multiplication to positive or negative numbers indifferently has lead to a false conclusion, but that is almost certainly due to the fact that in every case the apparent process of multiplication by a negative number admits of some alternative explanation of the kind illustrated above. In all that follows, therefore, it will be considered possible to multiply by a negative number on this understanding.

(D2) The Multiplication of Number Groups. Zero in Multiplication.

Consider the product $a \times (b-c)$. In view of the discussion in para. (D1), it will be considered permissible, irrespective of the sign of $(b-c)$, *i.e.*, whether $b > c$ or $b < c$, to put

$$a \times (b-c) = (b-c) \times a$$

in which form the right-hand side can be written out in full exactly as in para. (D) of this section. In this way it can be shown that

$$(b-c) \times a = (b \times a) - (c \times a)$$

i.e.,

$$a(b-c) = (b-c)a = ba - ca = ab - ac$$

If $b > c$, there is another way of arriving at the same result which will give a further conclusion. The group $a \times (b-1)$ will obviously contain one a less than that represented by the group $a \times b$, so that—

$$\{a \times (b-1)\} + a = (a \times b)$$

Similarly

$$\{a \times (b-2)\} + (a \times 2) = (a \times b)$$

and so on up to

$$\{a \times (b-c)\} + (a \times c) = (a \times b).$$

Now adding to each equal number the negative number $-(a \times c)$,

$$\{a \times (b-c)\} + (a \times c) - (a \times c) = (a \times b) - (a \times c)$$

and since

$$+(a \times c) - (a \times c) = 0$$

$$a \times (b-c) = (a \times b) - (a \times c).$$

Now continue the process further, by increasing c until it is equal to b. Then—

$$a \times (b-b) = (a \times b) - (a \times b),$$

i.e.,

$$a \times 0 = 0.$$

Also from the original definition,

$$0 \times a = 0 + 0 + 0 + 0 \text{ etc., . . .}$$

written down a times.

$$= 0$$

* This statement is calculated to raise clouds of dust from the pages of agitated and outraged text-books. It is possibly a position that could be blown to pieces by the "big guns" of pure mathematics, but this series is being written with a strong practical bias and the writer hopes to be able to avoid the introduction of incomprehensible ideas into the fundamental definitions. The standard text-books usually take a perfectly plausible but not very useful way out of this apparent difficulty. Having shown that $a \times b = b \times a$ for positive numbers, they say it *shall* be so for negative numbers also, saying it three times if necessary to secure conviction. In other words the symbol $\times$ is so defined. But since we can then no longer understand the process we are not much forrader.

Digitized by Google

This shows that the symbol o obeys the Commutative Law, and that the product of any number with zero is zero.

Returning to the multiplication of number groups, in the product

$$(b-c)\times a=(b\times a)-(c\times a),$$

suppose that a is itself the sum of d and $-e$, *i.e.*,

$$a=(d-e)$$

Then

$$\begin{aligned}(b-c)\times(d-e)&=\{b\times(d-e)\}-\{c\times(d-e)\}\\&=\{(d-e)\times b\}-\{(d-e)\times c\}\\&=\{(d\times b)-(e\times b)\}-\{(d\times c)-(e\times c)\}\\&=(d\times b)-(e\times b)-(d\times c)+(e\times c)\end{aligned}$$

i.e.,

$$(b-c)(d-e)=db-cd-be+ec$$

in which it is seen that *each number in the first group is multiplied by every number in the second group, signs being combined according to the rules already established* in the section dealing with the combination of positive and negative numbers.

As in the case of addition, the meaning of the letter symbols can now quite legitimately be extended so as to include both positive and negative numbers.

An interesting special case should be noted at this point.

$$\begin{aligned}(x-a)(x-b)&=xx-bx-ax+ab\\&=xx-(a+b)x+ab\end{aligned}$$

and if $b=a$,

$$\begin{aligned}(x-a)(x-a)&=xx-(a+a)x+aa\\&=xx-2ax+aa.\end{aligned}$$

In this last expression, we have for the first time algebraic symbols and ordinary numbers in association. There is obviously no need whatever for any given expression to be made up either of letters or explicit numbers exclusively. Nothing more need be said about this for it introduces no new ideas, though as a matter of fact it does introduce a new word. A number associated with a letter symbol in the way that -2 is associated with x in $xx-2x+4$ is often called the "coefficient" of the given letter. This name is also applied more generally to one member of a product which remains constant while the other is allowed to vary in magnitude under given conditions. Thus if x is allowed to vary, the $-2a$ in $xx-2ax+aa$ could be called the coefficient of x. It is not an entirely fortunate choice of word, for "efficient" is always used adjectively in common speech, whereas it appears substantively in "coefficient," the literal meaning of which is "co-worker."

The form of the two products just considered should be very carefully observed, for they play a large part in the practical applications of algebra. It will be seen later that there is a shorter way of writing them, which does not of course affect their general character.

(D3) Resolution into Factors.

The reverse (not the *inverse*, which is something quite different) of the process described in the last paragraph is at least as important as the direct process. It is called "factorisation" or "resolution into factors" and consists of the expression of a more or less complex group of numbers in the form of a product of two or more terms, called "factors." Thus the factors of $xx-(a+b)x+ab$ are $(x-a)$ and $(x-b)$. Take for instance $xx-7x+12$. This can be written $xx-(4+3)x+4\times3$, and comparing this with the general form it is clear that the factors of this expression are $(x-4)$ and $(x-3)$, *i.e.*,

$$xx-7x+12=(x-4)(x-3).$$

At present the only method available for factorising such expressions is that illustrated in this example, namely, "inspired guesswork," or what the disrespectful or possibly envious poet described as "cunning low, meet for things problematical." Later on some more certain though, in consequence, rather less exciting methods will be discovered.

(D4) The Physical Application of Multiplication.

The main interest of those for whom these articles are being written will be the physical application of the processes of mathematics. This is what distinguishes practical or applied mathematics from pure mathematics considered as a science in itself.

Two questions involving the physical meaning of the process of multiplication have already been raised in para. (D), and these questions we are now in a position to answer.

The physical aspect of addition presented no great difficulty. It was clear that things

Digitized by Google

could only be added together in the arithmetical sense if they were things of the same kind. What is the corresponding rule for multiplication? The fact that one cannot multiply three oranges by four apples and equally cannot multiply three apples by three apples suggests that one can multiply neither things of the same kind nor things of different kinds. And yet we talk of multiplying volts by amperes and inches by inches. Does this mean that in some cases one can and in others cannot multiply together things of the same or things of different kinds? That if the result means anything one can do either of these things, and that if it does not one cannot! Some will perhaps be willing to accept this as the true explanation. Actually it is not an explanation at all. It is a mere statement, and not even a true statement.

The true answer has already been indicated in para. (D). Multiplication is the addition of a number of groups and, physically, a group means a group of things which must all be of the same kind. Thus one of the factors of a product must be interpretable as a number of groups, and the other as a group of similar things. But how is this to be related to the apparent process of multiplying volts by amperes and calling the product "watts"?

To trace the connection we will take an instance which is sufficiently novel and ridiculous to be free from any pre-conceptions. Returning to our three apples, let it be supposed that one of these, following a well-known precedent, falls on the head of a philosopher and makes him think. It can even be supposed that the harder it hits him the more it will make him think, so that if it falls from a height of one foot it produces one theory, if from two feet, two theories, and so on. Suppose now that each of these three apples falls on the head of the philosopher from a height of five feet. Each apple now produces five theories. Each apple, so to speak, represents a group of five theories, and to find the total number of theories produced by this profitable though perhaps painful episode, we combine together as many groups of five theories as there are apples; that is, three groups of five theories. Actually, however, life is too short to permit our being as explicit as this on every occasion, and we would quickly form the habit of saying that we multiply the height by the apples and call the product theories, just as we have formed the habit of saying that we multiply the volts by the amperes and call the product watts—a very good habit too, provided we do not make the mistake of thinking that we really mean what we say.

In the electrical example it is a matter of definition and of experience that each ampere in "falling through" a potential difference of five volts would give rise to a group of five watts, and three amperes would therefore give three groups of five watts.

Thus the physical meaning of the process of multiplication is derivable from the ideal or purely mathematical meaning, and the application of multiplication in physics is seen to be of the same essential character as ordinary arithmetical or algebraic multiplication.

Examples.—I.

1. Distribute, *i.e.*, "multiply out"—
   $(a-b)(b-c)(c-a)$.
2. Find the magnitude of the number—
   $(xxx-6xx+11x-6)$ when $x=1, 2, 3,$ and 4.
3. Under what conditions will $(x-a)(x-b)$ be zero?
4. Find the factors of—
   (*a*) $xx-7x+10$.
   (*b*) $xx-3x-10$.
   (*c*) $xx+3x-10$.
   (*d*) $aa-100ab+99bb$.
   (*e*) $aa-bb$.

NOTE.—On *p.* 373 of June issue:—
For $a-b$, last line, col. 1, *read* $a \sim b$.
,, $(a-b)$ line 15, col. 2, *read* $(a \sim b)$.
,, $=+(a-b)$, line 26, col. 2, *read* $+(a \sim b)$.
,, $-(d-c)$, line 29, col. 2, *read* $-(c \sim d)$.

Digitized by Google

Abstracts and References.

Compiled by the Radio Research Board and reproduced by arrangement with the Department of Scientific and Industrial Research.

R000.—WIRELESS IN GENERAL.

R090.2.—RADIO COMMUNICATION AND IMPERIAL DEVELOPMENT.—Dr. Eccles. (*Nature*, 8th May, 1926, pp. 659—662.)

R100.—GENERAL PRINCIPLES AND THEORY.

R112.—TRANSMISSION AND RECEPTION WITHOUT AERIAL OR EARTH. (*Wireless World*, 2nd June, 1926, pp. 725—727.)

An account of a demonstration recently given by Mr. Derek Shannon to the *Wireless World*, when he justified the claims made for his apparatus.

R112.—RECEIVING AERIALS. A SIMPLE THEORY OF INDUCED AERIAL CURRENTS.—F. M. Colebrook. (*Wireless World*, 5th May, 1926, pp. 665—668.)

R113.—VERSUCHE ÜBER DIE AUSBREITUNG DER ELEKTROMAGNETISCHEN WELLEN (Experiments on the propagation of electromagnetic waves).—M. Bäumber and J. Zenneck. (*Electrische Nachrichten-Technick* April, 1926, pp. 139—141. *Zeitschr. f. Hochfrequenz.*, 27, 4, pp. 117—119.)

A description of experiments made in August, 1924, chiefly to study the behaviour of radio waves as they pass over from sea to land. The transmitter was erected on the island Heligoland, and receiving stations were set up at several places on and near the coast between Cuxhaven and Bremerhaven. A plan of these is shown in the diagram.

The site was particularly favourable for the following reasons :—

1. On Heligoland a valve transmitter for several wavelengths could be set up at the Post Office without much difficulty.

2. The distance between transmitter and coast was so great, on the one hand, that the waves radiated could spread out over a large surface of water before they reached the unhomogeneous tract in front of and at the coast, and on the other hand, sufficiently small to permit a convenient intensity measurement.

3. Assuming rectilinear propagation, the waves met the coast at all possible angles—approximately at right angles at receiver 1, and approximately at grazing incidence at receiver 9.

4. The relatively large difference in level of the North Sea at low and high tide made it possible to use the same tract under two different conditions : at high tide the sands and flats stretching away from the shore lay one to two metres below the water's surface, while at low tide they were as much above it.

5. In between transmitter and two of the receivers (3 and 4) there lay two islands (Neuwerk and Scharhörn) that could exert an influence.

The receiving stations are numbered in the figure and were selected so that every two, viewed from the transmitter, lie in the same direction, one of them always being on the coast and the other inland.

For the observations two similar receiving arrangements were employed, based on that of Hollingworth (*Journ. Inst. Elect. Engineers*, 61, 501, 1923)—the chief differences being Auders' addition of a current transformer to the circuit for measuring the weak frame voltages (*E.N.T.*, 2, 401, 1925) and the use of a unifilar electrometer as indicating instrument.

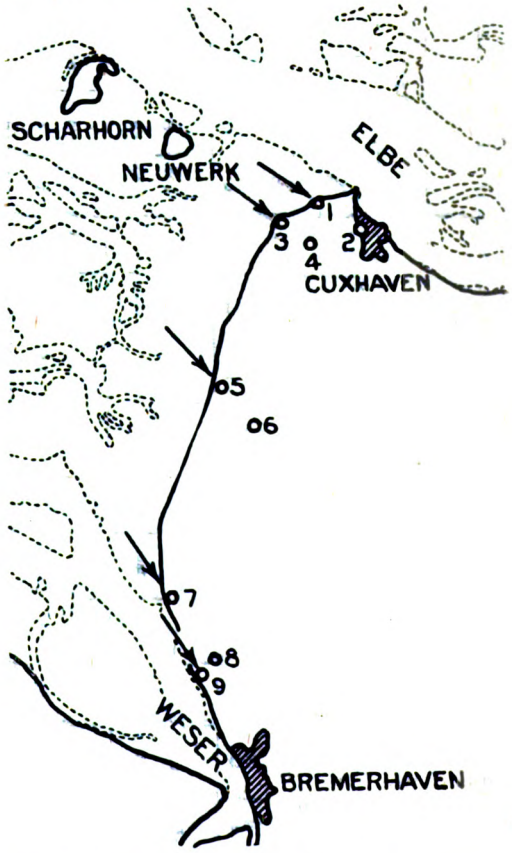

The results are tabulated on the next page.

Here *K* stands for coast station, and *L* for inland station. The measurements show no effect of the level of the water on the intensity or direction of the radio waves, nor can any change of intensity be detected with certainty as the waves pass from water to land. In any case the change cannot be great. It thus appears to make no perceptible difference to the propagation of waves whether

Digitized by Google

Day.	Receiving Station.	Distance km.	K L	Receiver.	Geographical Angle.	Wave 1,500 m. Ebb. Observed Angle.	Ebb. Deviation.	Ebb. Field Strength $\mu \frac{v}{m}$	Ebb. + %	Flow. Observed Angle.	Flow. Deviation.	Flow. Field Strength $\mu \frac{v}{m}$	Flow. + %	Wave 500 m. Ebb. Observed Angle.	Ebb. Deviation.	Ebb. Field Strength $\mu \frac{v}{m}$	Ebb. + %	Flow. Observed Angle.	Flow. Deviation.	Flow. Field Strength $\mu \frac{v}{m}$	Flow. + %	Weather.
18/8	(1)	3.6	K	I.	303	298	— 5	217		299	— 4	217		298	— 5	175		299	— 4	175		Squally, frequent showers.
	(2)		L	II.	303	301	— 3	240	10.6	300	— 3	220	1.4	300	— 3	(1030)	(490)	300	— 3	(1020)	(482	
19/8	(1)	3.3	K	I.	303	296	— 7	248	18	296	— 7	229	81.8	297	— 6	200		297	— 6	200		Fine at first, later rain and thunderstorm.
	(3)		L	II.	306.5	297	— 9.5	210		297	— 9.5	126		297	— 9.5	(1176)	(490)	297	— 9.5	(1240)	(520)	
20/8	(3)	2.5	K	I.	306.5	297	— 9.5	143		297	— 9.5	240		297	— 9.5	(1490)	(475)	302	— 4.5	(1010)	(320)	Intermittent clouding over, successive thunderstorms
	(4)		L	II.	306.5	317	+ 10.5	229	60	174 bis 319	—132 + 12.5	99 bis 310	29.3	276	—40.5	260		268	—38.5	240		
7/8	(5)	3.0	K	I.	317	313	— 4	211	18.3	312	— 5	186		312	— 5	1100	37.6	312	— 5	540		Overcast, very cloudy over-sea, later rain.
	(6)		L	II.	317	310	— 7	180		311	— 6	250	34.4	310	— 7	800		313	— 4	615	14	
8/8	(5)	3.0	K	I.	317	314	— 3	248	37.7	314	— 3	180		314	— 3	650	4.85	314	— 3	600	17.6	Cloudy, some sun over sea, then clearing up.
	(6)		L	II.	317	312	— 5	180		311	— 6	275	52.7	310	— 7	620		311	— 6	510		
11/8	(7)	5.2	K	I.	327	325	— 2	186		324	— 3	198		325	— 2	310		325	— 2	340		Fine, clear, fresh S.E. ci. str.
	(8)		L	II.	327	326	— 1	200	7.5	326	— 1	240	21.2	323	— 4	975	214	324	— 3	1050	209	
12/8	(9)	1.7	K	I.	327.5	324	— 3.5	186		324	— 3.5	205	2.5	324	— 3.5	740		324	— 4.5	860	56.5	Up to 3 o'clock as previously, then sky overcast, in evening, storm.
	(8)		L	II.	327	333	(+ 6)	200	7.5	333	(+ 6)	200		334	(+ 7)	830	12	333	(+ 6)	550		

Table showing observations on signal variations.

Digitized by Google

they travel over sands and flats or smooth and sandy solid ground—or whether the sands and flats lie 1-2 metres above the sea level or the same distance below it. The effect of the weather on 20th August is however remarkable. The great changes of directions and field strength observed during the storm are exceptionally striking even with the small distance between transmitter and receiver that there was here (56 km.). The readings show that direction-finding in such weather is out of the question.

With regard to direction-finding, all bearings gave too small an angle compared with the geographical direction—which goes to show that even right on the coast refraction takes place, and therewith distortion of the wave-front, as has been observed at stations further inland. The observations agree as to size with the German navy's directional error for the North Sea coast—these likewise giving too small an angle compared with the geographical direction. It is not certain whether the specially large error observed at Station 3 is to be attributed to the islands Neuwerk and Scharhörn owing to the low degree of accuracy of the measurements.

R113.—THE PROPAGATION OF RADIO WAVES.—J. Hollingworth. (*Journ. I.E.E.*, May, 1926, pp. 579—595.)

The full text of the paper is given here of which there was an abstract in *E.W. & W.E.* for March. The discussion following the reading of the paper is also given.

R113.—LA PROPAGATION DES ONDES ELECTRO-MAGNÉTIQUES DANS LA THÉORIE DE LA RELATIVITÉ GÉNÉRALE.—Guido Beck. (*Archives des Sciences Physiques et Naturelles*, Mars—Avril, 1926, pp. 75—77.)

A mathematical note.

R113.—APPLICATION OF RADIO TRANSMISSION PHENOMENA TO THE PROBLEMS OF ATMOSPHERIC ELECTRICITY.—J. H. Dellinger. (*Journ. Washington Acad. Sciences*, 19th March, 1926, pp. 162—167.)

A brief progress report on the inter-relations of the problems of radio transmission phenomena and those of atmospheric electricity. These inter-relations are tabulated as follows :—

Atmospheric Electricity.	Radio Phenomena.
Lightning and thunderclouds.	Atmospheric disturbances.
Aurora and magnetic storms.	Radio and electric line telegraph disturbances.
Atmospheric potential gradient, and conductivity; diurnal and annual variations.	Similar variations in atmospheric disturbances and field intensities.
Earth's magnetic field and upper air conductivity.	Differing radio wave propagation at various frequencies, distances and directions.

The writer states that he might equally have entitled his remarks "Application of atmospheric-electric phenomena to the problems of radio transmission," but that the reasons for putting it in the way he did are two :—

1. Radio gives us a direct means of conducting controlled experiments on phenomena affected by the electrical conditions of the atmosphere, a means which is wholly impossible in the field of direct atmospheric-electric measurements; and

2. Atmospheric electricity, rather than radio, is the science which must take the responsibility and the labour of deciphering the inner relations between these various phenomena and the deduction of the underlying causes thereof.

R113.—PRELIMINARY NOTE ON PROPOSED CHANGES IN THE CONSTANTS OF THE AUSTIN-COHEN TRANSMISSION FORMULA.—L. W. Austin. (*Journ. Washington Acad. Sciences*, 9th April, 1926, pp. 228—231.)

The original formula of 1910-1914 for daylight signals over salt water was written

$$E = 120\pi \frac{hI}{\lambda d} \sqrt{\frac{\theta}{\sin\theta}}\, \epsilon^{-u} \text{ (volts km. amp.)}$$

where

$$u = \frac{0.0015d}{\lambda^{0.5}}$$

The constants in u were determined empirically from shunted telephone observations for distances up to 2,000km. and frequencies between 1,000kC. (λ=300m.) and 80kC. (λ=3,750m.).

The author has naturally been desirous of bringing the formula into better agreement with the observations. The idea of altering the Hertzian portion of the formula has been given up, since this is the part that rests on a theoretical basis, and attention given only to possible changes in the values of the constants of the exponential term.

The very considerable amount of experimental data on signal field strength collected during recent years has been used to obtain at least tentative constants for a new formula. Up to the present a value of

$$u = \frac{0.0014d}{\lambda^{0.6}}$$

seems to give fairly satisfactory results. This may be slightly varied as more and better observational data are obtained.

R113.—THE MAGNETIC AND ELECTRIC SURVEY OF THE EARTH: ITS PHYSICAL AND COSMICAL BEARINGS AND DEVELOPMENT.—J. A. Fleming. (*Journ. Washington Acad. Sciences*, 4th March, 1926, pp. 109—132.)

R113.1.—THE OBSERVATION OF FADING EFFECTS: MEASUREMENT OF SIGNAL STRENGTH WITH SIMPLE APPARATUS.—Prof. E. V. Appleton. (*Wireless World*, 21st April, 1926, pp. 581—582.)

R113.2.—ON THE DIURNAL VARIATION OF ULTRA-SHORT WAVE WIRELESS TRANSMISSION.—Prof. Appleton. (*Proc. Cam. Phil. Soc.*, April, 1926, pp. 155—161.)

An interpretation of ultra-short wave wireless phenomena is given which indicates that the maximum number of electrons per cc. in the atmospheric ionised layer is of the order 10^5 to 10^6. (*Cf.* A Hoyt Taylor and E. O. Hulbert in February issue of the *Physical Review*, where similar conclusions are arrived at regarding the maximum electronic content of the ionised layer.)

Digitized by Google

R113.2.—FADING.—Prof. Marchant. (*E.W. & W.E.* May, 1926, pp. 288—299.)

A lecture given to the Radio Society of Great Britain on 24th March, together with the discussion that followed.

R113.4.—HIGH FREQUENCY RAYS OF COSMIC ORIGIN. (I.) SOUNDING BALLOON OBSERVATIONS AT EXTREME ALTITUDES.—R. Millikan and I. Bowen. (*Physical Review*, April, 1926, pp. 353—361.)

This first of three articles on the cosmic radiation, recently investigated by Millikan, considers the observations recorded by two balloons which reached altitudes of 11.2 and 15.5km. respectively. These give an average rate of production of ions that is only 25 per cent. of the value to be expected from the observations of Hess and Kolhörster and show the absorption coefficient of the extremely penetrating radiation to be as low as .18 per metre of water instead of .57 as estimated previously.

R113.4.—THE KENNELLY-HEAVISIDE LAYER AND RADIO-WAVE PROPAGATION.—Dr. E. O. Hulburt. (*Journ Franklin Inst.*, May, 1926, pp. 597—634.)

Description of a theory of wave transmission, in many respects quantitative, adequately explaining several numerical facts of the propagation, distortion and polarisation of radio waves. The earlier part of the article is based on a paper by Taylor and Hulburt (*Physical Review*, February, 1926)—the latter part, dealing with the polarisation of the received wave, is claimed to be new. This new part chiefly discusses reception with the Hertz antenna and those errors in radio-direction finding that arise from refraction in the upper atmosphere.

R113.6.—THE ELECTRO-MAGNETIC EQUATIONS OF LIGHT PROPAGATION IN MOLECULAR MEDIA OF VARYING DENSITY.—Louis V. King. (*Physical Review*, April, 1926, p. 518.)

Abstract of paper presented to the American Physical Society.

R114.—A LIGHTNING STRIKE.—N. E. Dorsey. (*Journ. Washington Acad. Sciences*, 16, pp. 87—93.)

Years ago a lightning flash was supposed to take place along the path of minimum electric resistance. Afterwards Lodge gave reasons for supposing that it followed the path of minimum electric inductance, and this is the orthodox theory at the present time. In this paper the author describes what happens during a lightning flash as follows: There is at first a rush of electrons. These blaze a conducting path along which flows a more leisurely current of the ordinary type. Possibly this conducting current conveys a far larger quantity of electricity than is carried by the dart of electrons. The direction in which the dart flies is the direction in which the blow is delivered. The effects produced where the stroke starts differ characteristically from those produced where it ends. These conclusions were suggested by the close examination of a tree that had recently been struck by lightning.

R114.—ON LIGHTNING.—Dr. Simpson. (*Proc. Roy. Soc.*, May, 1926, pp. 56—67.)

A discussion of the discharge of electricity through air at atmospheric pressure leading to the following conclusions:—

(*a*) The conducting channel of a lightning flash originates in the region of maximum electric field and develops only in the direction of the seat of negative electricity.

(*b*) A negatively charged cloud can only be discharged by a discharge which originates in a positively charged cloud or in the induced positive charge on the earth's surface.

(*c*) A positively charged cloud may be discharged by discharges starting in the cloud and terminating either in the surrounding atmosphere or on the earth's surface.

(*d*) If a lightning flash is branched, the branches are always directed towards the seat of negative electricity.

(*e*) The application of these conclusions to 442 photographs of lightning discharges reveals the fact that the preponderance of the lower clouds from which lightning discharges proceed are positively charged.

R114-R125.—THE DIRECTIONAL RECORDING OF ATMOSPHERICS.—R. A. Watson Watt. (*Journ. I.E.E.*, May, 1926, pp. 595—610.)

The full text of the paper is given here of which there was an abstract in *E.W. & W.E.* for April. The discussion following the reading of the paper is also given (p. 617).

R114—R125.—AN INSTANTANEOUS DIRECT-READING RADIOGONIOMETER.—R. A. Watson Watt and J. F. Herd. (*Journ. I.E.E.*, May, 1926, pp. 611—622.)

A paper read before the Wireless Section, 3rd March, together with the discussion that followed. An abstract was given in *E.W. & W.E.* for April.

R127.—BERECHNUNG DER INDUKTIVITÄT EINER EINWICKELIGEN RAHMENANTENNE BELIEBIGER FORM (Calculation of the inductance of a single-layer frame antenna of any shape).—V. Bashenoff. (*Zeitschr. f. Hochfrequenz.*, 27, 4, pp. 110—117.)

From his long experience in constructing receiving stations the writer has found that a large frame with few windings has many advantages over a small frame with several windings, and the advantage of the triangular form, which, however, has not yet been considered in the literature of the subject. Accordingly, in this article, he deduces a formula for calculating the coefficient of self-inductance of a right-angled triangle on the basis of the Bio-Savart law. This formula is employed to calculate the coefficient of self-inductance of all plane figures which can be converted into right-angled triangles of the same area and perimeter; the conditions for the admissibility of such a transformation being also found. Further, an approximate method is given for calculating the coefficient of self-inductance of figures which do not satisfy the conditions of transformation. The experimental tests of the formulæ deduced for triangles and other figures

Digitized by Google

show a small percentage deviation from the calculated values, which for the most part falls within the limits of the degree of accuracy of the measurements.

R130.—CHARACTERISTICS OF SHIELDED-GRID PLIOTRONS.—A. Hull and N. Williams. (*Physical Review*, April, 1926, pp. 432—438.)

Description of valves specially designed with the plate and grid electrostatically shielded from each other to prevent internal "feed-back." The capacity between plate and control grid was found to be only .006$\mu\mu$F in the best models. These valves were found to behave as strictly unidirectional devices at all frequencies. Plate-resistance characteristics are given, and it is shown that the internal plate conductance is negligible compared with the conductance of practical circuits. The plate current thus depends on grid voltage only, *i.e.*, in place of the seven parameters of the three-element tube there is but one : mutual conductance.

R130.—SUPPLEMENT TO "ON THE INPUT ADMITTANCE" WITH REFERENCE TO THE VOLTAGE AMPLIFICATION RATIO. — Y. Watanabe. (*Journ. I.E.E., Japan*,, April, 1926, pp. 397—405.)

In the original paper (previous number) the input admittance circle diagram was treated mathematically and experiments were described in confirmation.

In this supplementary paper the author considers the voltage amplification ratio circle diagram for various cases of plate loading, and experiments are made at 100,000 cycles with the C R. type A.C. potentiometer.

R131.—UNTERSUCHUNGEN AN RAUMLADEGITTERRÖHREN (Investigation of valves with space-charge grid.—E. Alberti. (*Electrische Nachrichten-Technik*, April, 1926, pp. 149—154.

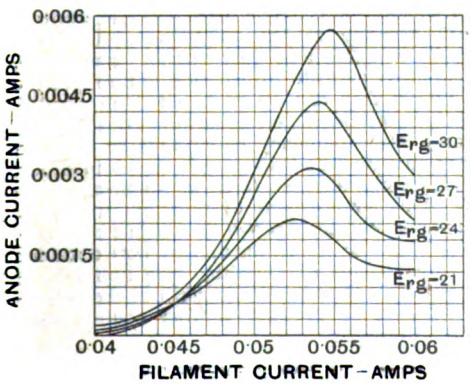

Fig. 1.

To steepen the characteristic in amplifying valves by reducing the space-charge, Langmuir has introduced a positively-charged space-charge grid between cathode and control grid. The theory of these valves is much more complicated than that of three-electrode valves and up to the present has only been treated with certain assumptions, such as that the wire of the control grid is very thin and also that no space-charge effects occur between the two grids and the anode—which condition is only fulfilled when the control and anode tensions have large positive values.

In this article some phenomena with these four-electrode valves are described and explained that perhaps are not generally known. They refer to measurements with the grid voltage negative, for which, of course, the assumptions of the theory are not fulfilled. The relation between anode current and heating is represented in Fig. 1.

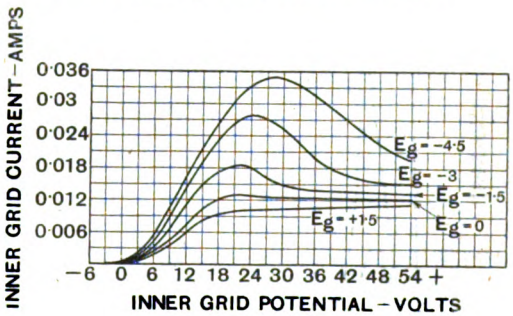

Fig. 2.

The explanation of the curve first rising and then falling is to be looked for in the presence of space-charge between space-charge and control grids, which increases with the heating.

The way in which the space-charge grid current depends upon the space-charge grid voltage was also investigated and is shown in Fig. 2.

The characteristic obtained here likewise first rises and then falls, which can also be accounted for by the space-charge with negative grid voltage.

R131.—MEASUREMENTS OF HIGH FREQUENCY AMPLIFICATION WITH SHIELDED GRID PLIOTRONS —Albert W. Hull. (*Physical Review*, April, 1926, pp. 439—454.)

Description of tests of cascade high frequency amplification using specially constructed valves in which the control grid is electrostatically shielded from the plate. These valves are free from internal feed-back so that any number may be operated in series. The voltage amplification per stage depends only on the circuit impedance, and was found to be 200 at 50kC, 40 at 1,000kC, and 7 at 10,000kC. Total amplifications as high as 2,000,000 in voltage were obtained and measured at 1,000kC. It is shown that this is the largest amplification that can be usefully employed at any frequency. At 10,000kC a total amplification of 10,000 was obtained. Examples are given of other applications where shielding is advantageous, such as in the amplification of small photo-electric currents.

Digitized by Google

R133-1.—Sur les Variations d'Intensité du Courant Thermionique lorsqu'on Change la Distance entre le Filament et l'Anode.—T. Jonescu. (*Comptes Rendus*, 26th April, 1926, pp. 1016—1018.)

The filament employed in this investigation was of platinum covered with calcium oxide, 6 mm. long and .1 mm in diameter. The circular anode had a diameter of 5 mm. The distance between filament and plate was varied by turning a micrometer screw and ranged for these experiments between 1.2 and .01 mm.

The current obtained as a function of the distance is shown graphically for 60, 120 and 180 volts difference of potential.

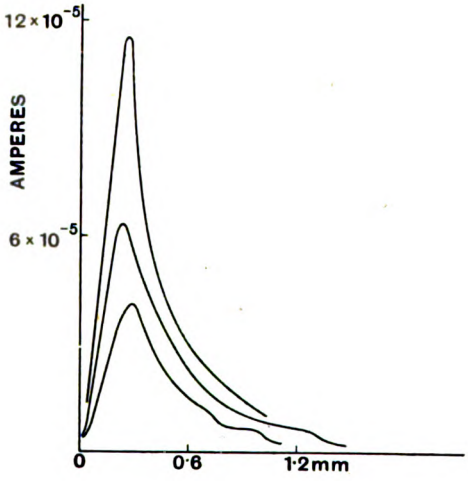

Fig. 1.

As the distance diminishes, the current intensity is seen to pass through a maximum and then decrease again as the distance becomes very small. This decrease was found to be caused partly by the cooling of the filament due to the close approach of the anode.

The variations in current intensity produced by changing the distance between filament and anode have been applied to the investigation of small movements. For instance, a branch of a tuning fork was used as anode and the distance between it and the filament was adjusted so that the point of operation lay on the steepest part of the curve (Fig. 1). By inserting a telephone in the anode circuit and causing the tuning fork to vibrate, the fundamental note and harmonics could be heard and the positions of the nodes of vibrations determined. The method appears a good one for finding the nodal lines of a plate.

Also a microphone was made by employing as anode a thin metal sheet stuck to a sheet of mica in front of which one speaks. The sound heard in a telephone inserted in the anode circuit is loud and very clear. The variation of intensity of the current obtained is of the order of 10^{-4} amperes.

R134.2.—La Détection par Caractéristique de Grille Peut-on l'Améliorer? (Can detection by grid characteristic be improved?).—S. Luroff. (*Radio Revue*, 9th May, 1926, pp. 33—36.)

The mathematical theory of detection by grid characteristic has been developed by Laüt and Beauvais. This article deals with the same question, but with certain modifications at the outset.

Beauvais and Laüt start from a difference of potential between grid and variable filament. Here the author supposes that the difference of potential filament-grid is determined by a given incident E.M.F. superimposed on the constant E.M.F. of the heating battery.

A graph is thus obtained which is slightly different from that to which the theory of Laüt and Beauvais leads.

From the investigation some considerations as to the possible improvement of detection by grid characteristic are deduced.

R134.4.—High Frequency Resistance: Damping Effects in Receiving Circuits and how They may be reduced by Reaction. E. Mallett. (*Wireless World*, 28th April, 1926, pp. 618—620.)

R135.—Sur la Modulation Fixe des Postes Emetteurs à Triodes Alimentés par Courant Continu (On the fixed modulation of triode transmitters supplied with direct current).—A. Blondel. (*Comptes Rendus*, 26th April, 1926, pp. 997—999.)

Modulating devices for telephony transmitters respond to complex difficulties and the depth of the modulation has to be sacrificed to the purity. On the other hand, for the transmission of a steady note by a signalling station, such as a radio beacon, attempt should be made to obtain the maximum depth of modulation by simple means. From this point of view the author has investigated different methods of modulating the grid current of triode transmitters in the case where the plate is supplied with direct current. The usual methods employ low frequency devices, such as the tikker or vibrator or low frequency heterodyne, all of which necessitate the grid working in the neighbourhood of the point where oscillations just cannot take place, requiring fairly delicate adjustment, and reduce the useful power that can be obtained from triodes.

A better method is described here consisting of coupling a high frequency heterodyne to the grid circuit of an autodyne transmitter, the plate circuit being separately adjusted to a neighbouring wavelength. This employment of the high frequency heterodyne is said to improve the output of modulated waves and to permit the musical note obtained to be varied easily and within wide limits by a simple adjustment of the wavelength of the heterodyne and also to produce sharper sounds than with an alternator.

R138.—A Study of the Concurrent Variations in the Thermionic and Photo-Electric Emission from Platinum and Tungsten with the State of the Surfaces of these Metals.—T. Harrison. (*Proc. Phys. Soc., Lond.*, 15th April, 1926, pp. 214—233.)

Attempt is made to measure the thermionic

Digitized by Google

and photo-electric work functions for the same specimens of tungsten and platinum. It is found that in all cases the results depend greatly on the previous heat treatment of the material. In the case of platinum the curves showing the dependence of photo-electric sensibility on the wavelength of the irradiation are of four different types, while as regards thermionic properties the specimens can take up either a "large emission" or a "small emission" state, according to their treatment. The photo-electric work function of platinum came out greater than the thermionic, but no definite results were obtained for tungsten.

R138.—Reconciliation of Experiments on Probability of Ionisation by Electron Impact.—K. Compton and C. Van Voorhis. (*Physical Review*, April, 1926, p. 516.)

Abstract of paper read at the Montreal meeting of the American Physical Society last February.

It is shown that the recent work in this field by Hughes and Klein and that of the authors are brought into fair agreement by correcting for three sources of error :—

1. Effect of the electric field on the effective area of holes in the grid through which primary electrons pass.
2. Presence of slow secondary electrons and lack of homogeneity in velocities of primary electrons.
3. Warming of gas by filament.

R138.—Analysis of Positive Ions Emitted by a New Source.—G. Harnwell and H. Barton. (*Physical Review*, April, 1926, p.514.)

Abstract of paper read at the Montreal meeting of the American Physical Society last February.

Certain iron oxide crystals containing about 1 per cent. of some alkali metal or alkaline earth have been found to be constant and abundant thermionic emitters of positive ions. The alkali metal ions were emitted at lower temperatures than the alkaline earth ions. A preliminary treatment consisting of reduction at red heat in an atmosphere of hydrogen increased the emission.

The emission was analysed by means of a mass spectrograph described by Smyth.

R142. — Gekoppelte Schwingungsgebilde (Coupled oscillatory systems).—H. Hecht. (*Elektrische Nachrichten-Technik*, April, 1926, pp. 121—138.)

In this article the theory of coupled oscillatory systems is given with a view to the practical application of the theoretical results, but without reference to any particular technical problems. Since forced oscillations are the more important in practice, these are considered in detail, and free oscillations only mentioned occasionally. The ideas and expressions actually employed are those for a mechanical oscillatory system, but these apply equally well to an electrical oscillatory system for investigating theoretically oscillation phenomena occasioned exclusively through coupling.

Resonance is found to occur as follows (all coupling is supposed close and of the same value) : A simple oscillatory system has only one position of resonance. Two coupled systems have two resonance positions symmetrical to the resonance position of the one-wave system, and a minimum coming at the position of resonance of the one-wave system. With three oscillatory systems, the number of resonance positions increases to three, the lowest one coming below the lower of the two-wave system, the medium one at the dip, and the highest above the higher of the two-wave system, while the two minima fall at the two positions of resonance of this latter system. In the same way one passes from three-wave to four-wave systems, and the general law can be formulated, that the resonance or minima positions correspond to the minima or resonance positions respectively, of an arrangement that is greater or less by one system.

R144.—Effective Resistance of Inductance Coils at Radio Frequency—Part II.—S. Butterworth. (*E.W. & W.E.*, May, 1926, pp. 309—316.)

R144.—Losses in Inductance Coils: The Need for a Standard of Efficiency.—S. Butterworth. (*E.W. & W.E.*, May, 1926, pp. 267—268.)

R148.1.—Comment éviter les Déformations de la Voix en Téléphonie sans Fil (How to avoid speech distortion in wireless telephony). (*Radio Electricité*, 10th May, 1926, pp. 163—166.)

A first part of an examination of the different causes of distortion proceeding from the receiving end, leaving out of account those due to the transmitter and propagation.

This distortion can arise from :—

1. Effects due to the antenna and the high frequency circuits associated with it.
2. Effects due to the detection.
3. The low frequency amplifier.
4. The loud-speaker.

In addition, account must be taken of the characteristics of the human ear, in the appreciation of this deformation.

This article discusses the effects due to the antenna and high frequency circuits.

The unfavourable action is shown of too sharp resonance, of circuits with very little resistance, and of reaction that is pushed too far, leading consequently to a consideration of the employment of lightly damped circuits and the amplification of harmonics.

Causes of distortion 2, 3 and 4 are being discussed in a later number.

R148.1.—Distortion in Telephones: Effect of Series and Parallel Connections on Quantity.—W. Griffiths. (*Wireless World*, 5th May, 1926, pp. 650—652.)

R149.—A New Contact Detector: The Johnsen-Rahbek Contact as a Rectifier. (*Wireless World*, 21st April, 1926, p. 588.)

Digitized by Google

R200.—MEASUREMENTS AND STANDARDS.

R240.—On the Method of Measuring Phase Angle with a Triode.—T. Kumazawa. (*Journ. I.E.E., Japan*, April, 1926, pp. 362—396.)

Four methods are investigated both experimentally and theoretically.

R281.—Theory of Absorption in Solid Dielectrics.—V. Karapetoff. (*Journ. Amer. I.E.E.*, March, 1926, pp. 236—243.)

Most solid dielectrics are imperfect in the sense that when a constant D.C. voltage is suddenly applied, a displacement of electricity first takes place almost instantly to a certain value, and then continues to increase asymptotically towards an ultimate magnitude. Accordingly, an initial electric charge and a greater final charge may be distinguished, with the corresponding values of initial and final permittivities. The purpose of the present investigation is to establish certain general properties of the function which expresses the increase in the initial electric displacement with the time. The initial and the final leakage conductivities are also taken into consideration.

R300.—APPARATUS AND EQUIPMENT.

R320.—Luftleitermessungen am Rundfunksender Witzleben (Aerial measurements at the Witzleben Transmitting Station).—W. Schäffer and G. Lubsgynski. (*E.N.T.*, 3, 4, 1926, pp. 155—160.)

Detailed numerical data of the Witzleben aerial are given and the conclusions drawn from them, preceded by a short general description of the station.

R342.4.—A Reflexed Receiver with Resistance Audio Coupling.—L. W. Hatry. (*Q.S.T.*, May, 1926, pp. 23—26.)

The principle is explained and constructional hints are given. Unlike reflexing a single valve, the multi-tube reflex is a troublesome device to build, but it represents a considerable saving in valve cost and battery consumption.

R344.—Piezo Crystal Control. (*Electrician*, 21st May, 1926, p. 524.)

Details are given of the method used in the United States for overcoming the problem of broadcast interference.

R344.—Adjusting the Crystal-controlled Transmitter.—S. McMinn. (*Q.S.T.*, May, 1926, pp. 43—45.)

R355.51.—Taming the Synchronous Rectifier.—R. Kruse. (*Q.S.T.*, May, 1926, pp. 9—16.)

Methods are discussed for the prevention of sparking in the employment of the synchronous rectifier for plate supply.

R355.54.—A Dry Electrolytic Rectifier.—S. Kruse. (*Q.S.T.*, May, 1926, pp. 30—32.)

Description of the Ruben rectifier (or Elkorn charger) which uses a pair of discs, one of magnesium and the other a composition, between which a film is formed that effects the rectification, no moisture being present other than that in the air.

R355.55.—A New Valve Rectifier: Inexpensive Accumulator Charging from A.C. Mains.—Dr. Sayce. (*E.W. & W.E.*, May, 1926, pp. 269—270.)

R384.1.—Neon Wavemeter: A Simple, Inexpensive Instrument for the Transmitter.—A. P. Castellain. (*Wireless World*, 21st April, 1926, pp. 576—579.)

R387.—High Voltage Insulators.—W. Ure. (*Electrician*, 21st May, 1926, pp. 522—523.)

Unfortunately, good mechanical and high electrical qualities are nearly always antagonistic. This article indicates some of the more common factors that enter into insulation failure.

R388.—Phase and Magnitude of Deflections of Braun Tube Beam with Internal and External Electrodes.—R. Jack and L. Jones. (*Physical Review*, May, 1926, p. 642.)

Abstract of paper presented at a recent meeting of the American Physical Society.

At the lower frequencies the deflection is found to be a function of the frequency, while at the higher range the deflection becomes constant. At high frequencies the deflections with external and internal electrodes are apparently equal. By the use of Lissajous' figures, with the internal and external sets of electrodes at right angles, the phase difference is found to disappear at high frequencies.

R400.—SYSTEMS OF WORKING.

R420.—On the Wireless Beam of Short Electric Waves—II.—S. Uda. (*Journ. I.E.E., Japan*, April, 1926, pp. 335—351.)

The investigation is continued (see last number), using metal rods as reflectors.

R440.—The Problem of Remote Control: Relays and Circuits for Switching the L.T. Current.—A. P. Castellain. (*Wireless World*, 2nd June, 1926, pp. 729—730.)

R440.—Automatic Valve Replacement: Auxiliary Valve Circuits for Remote Control.—Dr. McLachlan. (*Wireless World*, 28th April, 1926, pp. 630—632.)

R500.—APPLICATIONS AND USES.

R510.—Marine Wireless Equipment: Modern Practice Exemplified by Siemens' Transmitting and Receiving Apparatus. (*Wireless World*, 21st April, 1926, pp. 585—588.)

R520.—Wireless on the Polar Airship: Transmitting, Receiving and Direction-finding Equipment of the "Norge." (*Wireless World*, 5th May, 1925, pp. 669—671.)

Digitized by Google

R582.—TRANSATLANTIC PHOTO-TELEGRAPHY. (*Electrical Review*, 4th June, 1926, pp. 820—822.)

Apparatus has been installed in London, New York and San Francisco for the establishment of a regular, reliable service for the transmission and reception of news' photographs, facsimile printed and written documents, designs, etc., via the 220-mile land line from London to the Carnarvon station of Marconi's Wireless Telegraph Co., thence across the Atlantic Ocean to the Riverhead station of the Radio Corporation of America on Long Island, and further on by land lines. Some account is given here of the system of transmitting and receiving photo-radiograms developed by Capt. Ranger and the Radio Corporation of America, of which there was a full description in *Proc.I.R.E.* for April (three abstracts, p.389, June, 1926).

Abridged accounts of picture transmission by the Ranger system are also to be found in *Wireless World*, 26th May, 1926, pp. 686—688, and *Electrician*, 21st May, 1926, p. 526.

R582.—WIRELESS PHOTO-TELEGRAPHY. (*E.W & W.E.*, May, 1926, p. 301.)

A short account of the Thorne-Baker system.

R586.—TELEVISION APPARATUS: A DESCRIPTION OF THE JENKINS SYSTEM.—A. Dinsdale. (*Wireless World*, 5th May, 1926, pp. 642—645.)

R600.—STATIONS: DESIGN, OPERATION AND MANAGEMENT.

R611.—THE RUGBY RADIO STATION OF THE BRITISH POST OFFICE.—E. Shaughnessy. (*E.W. & W.E.*, May, 1926, pp. 271—281.)

Abstract of paper read before the Wireless Section, I.E.E., on 14th April.

R611.—THE RUGBY RADIO STATION.—E. Shaughnessy. (*Electrician*, 23rd April, 1926, pp. 468—469; *Electrical Review*, 30th April and 7th May, 1926, pp. 716 and 753 respectively.)

Abstract of a paper read before the Wireless Section of the Institution of Electrical Engineers.

R612.—AUSTRALIA: BALLAN "BEAM" STATION. (*Electrical Review*, 4th June, 1926, p. 836.)

The site at Ballan is about 1,800 feet above sea level, and is free from "shielding" hills. The station will have two separate transmitters, one for communication direct with England, and the other for working with Canada. Each aerial system will be supported by three masts, 250 ft. in height, and the angle of the beam will be about 45 deg. The power used by the transmitters will be about 25 kilowatts. Messages will be sent from the offices of Amalgamated Wireless (Australasia), Ltd., Melbourne, by whom the station is owned, by telegraph line to Ballan, at a speed of 100 words a minute. A very short wavelength, probably less than 40 metres, will be employed, and it is expected that the station will be ready for tests to be carried out next month.

R616.57.—THE NEW VIENNA HIGH-POWER STATION: A DESCRIPTION OF AUSTRIA'S "DAVENTRY."—P. Gordon Fischal. (*Wireless World*, 28th April, 1926, pp. 625—629.)

R620.—THE CENTRAL RADIO OFFICE.—A. Irwin. (*Post Office Electrical Engineers' Journ.*, April, 1926, pp. 67—73.)

A description of the C.R.O. situated on the second floor of G.P.O. West.

R620.—THE POST OFFICE WIRELESS SERVICES.—E. H. S. (*Post Office Electrical Engineers' Journ.*, April, 1926, pp. 58—66.)

An account of the wireless services conducted by the Post Office by means of its point-to-point and coast stations, and the organisation by which these services are operated.

R621.385.—THE TELEPHONE, 1876-1926.—J. E. Kingsbury (*Electrical Review*, 5th March, 1926.)

A review of the progress of the telephone since the first patent granted on 7th March, 1876, to Alexander Graham Bell.

R800.—NON-WIRELESS SUBJECTS.

621.355.—EXPERIMENTELLE UNTERSUCHUNGEN ÜBER MAGNETISCHE FREQUENZWANDLER (Experimental investigation of magnetic frequency changers).—H. Plendl, F. Sammer and J. Zenneck. (*Zeitschr. f. Hochfrequenz.*, 27, 4, pp. 101—110.)

The article is summarised as follows:—

1. In frequency multiplication it is the saturation of the iron core that is important, while the tuning of the primary circuit is immaterial. For practical reasons, however, working generally takes place in the neighbourhood of resonance.

2. The large iron-free self-inductance in the primary circuit that is usually employed to obtain favourable conditions can often be replaced with advantage by a blocking circuit tuned to the third harmonic of the generator frequency.

3. Study is made of circuiting an iron-free self-inductance in parallel with the generator. This circuit arrangement, which has been described by Punp and Schmidt, gives favourable working conditions with correct tuning.

4. Considerable improvement in the frequency amplification can be obtained by placing a capacity parallel to the secondary winding of the iron core.

5. The higher the frequency multiplication, the closer is the most favourable coupling between primary and secondary circuits.

6. Multiplying frequency in two stages was found to be better than in one stage both as concerns the relation of the secondary current to the primary and the transient course of the secondary current.

7. Thorough investigation with the Braun tube was made of the physical phenomena and transference of energy in frequency multiplication with special reference to the circuit arrangement given in (4) and the question of the effect of tuning the secondary circuit.

Digitized by Google

Esperanto Section.

Abstracts of the Technical Articles in our last Issue.

Esperanto-Sekcio.

Resumoj de la Teknikaj Artikoloj en nia lasta Numero.

R000.—RADIO ĜENERALE.

R010.—La Kunrilatigo de Kelkaj Lastatempaj Progresoj en Radio—D-ro. B. Van der Pol.

Ĉi tiu artikolo estas traduko el la holanda lingvo, aperinta en *Polytechnisch Weekblad*, 19an de Nov. 1925a. Ĝi donas revuon pri la fundamentaj principoj de kelkaj malsamaj metodoj por generi oscilojn, kaj kunrilatigas diversajn aranĝojn, kiuj ŝajnas havi, unuavide, nenian rilaton unu al alia. La metodoj estas ĝenerale dividitaj en tiuj okazoj kie (*a*) la rezisteco kaj, (*b*) la induktanco estas funkcioj de l'kurento. En la unua klaso troviĝas la arko, triodo kun reakcio, dinatrono, Multibibratoro, Neona lampo, k.t.p. En la dua klaso troviĝas diversaj aranĝoj por la ŝanĝo de frekvenco, k.t.p., kun aparta aludo al diversaj specialaj aranĝoj.

R050.—Resumoj kaj Aludoj.

La komenciĝo de nova serio de Resumoj kaj Aludoj, kompilita de la *Radio Research Board* (Radio-Esplorada Konsilantaro), kaj publikigita de la Brita Registara Fako de Scienca kaj Industria Esplorado.

R082.—Alliniigaj Grafikaĵoj por Selektivaj Amplifikatoroj.—W. A. Barclay.

La grafikaĵoj presitaj estas por ilustri kaj solvi esprimojn uzitajn en artikolo pri "Selektivaj Amplifikatoroj" de S-ro. P. K. Turner en *E.W. & W.E.*, de Oktobro, 1925a. La grafikaĵoj reproduktitaj estas por la rezonanca ekvacio por malagorditaj signaloj, por agorditaj signaloj, kaj por la komparo de malagorditaj signaloj kun la agordita portanta ondo.

R100.—ĜENERALAJ PRINCIPOJ KAJ TEORIO.

R132.—Kelkaj Notoj pri Intervalvaj Kuploj.—Lekcio de S-ro. H. L. Kirke, de la Brita Brodkasta Kompanio, al la Radio-Societo de Granda Britujo, je 28a Aprilo, 1926a.

La lekcio amplekse esploris la temon de intervalva kuplo je radio—kaj aŭd-frekvencoj. La temo de amplifado estas unue konsiderita, laŭ la simpla okazo de rezisteca kuplo, kaj la rezonado etendita al ŝoka kuplo, kaj al agordita anoda kuplo. La efekto de reakcio estas poste diskutita; interalie, la aranĝo por uzado de ekstra valvo sole por reakciado. Pritraktita estas la efekto de interelektroda kapacito, sekvita de tre ampleksa revuo pri neŭtrodino. Oni priskribas kaj ilustras diversajn metodojn por obteni la neŭtrodinan alĝustigon, kun tre klaraj teoriaj diagramoj por klarigi ilian funkciadon. Poste konsideritaj estas malaltfrekuenca amplifado, rezisteco, kaj ŝoka kuplo (ferkerna).

Laste estas diskutita malaltfrekvenca transformatora kuplo, la argumento estante bone ilustrita per konsiderado de "ekvivalentaj cirkvitoj." La havigo de plata responda kurvo estas diskutita kaj montrita grafike, kaj mallonga fina aludo farita al la efikoj ĉe la fera kerno.

La diskutado kiu sekvis la lekcion estas presita.

R150.—La Kaŭzo Kaj Elimino de Noktaj Eraroj en Radia Direkto-Trovado.—Resumo de Referato de D-ro. R. L. Smith-Rose kaj S-ro. R. H. Barfield, antaŭ la Senfadena Sekcio, Institucio de Elektraj Inĝenieroj, je 5a Majo, 1926a.

La laboro priskribita estas esploro pri deflankiĝo de la alvenantaj ondoj. Ricevantena aranĝo por la kompenso de la horizonta membro de l'elektra kampo estas priskribita. Ĉi tio estas pro S-ro. F. Adcock, kaj konsistas el kvar Hertzaj oscilatoroj, aranĝitaj tiel, ke ili kompensas la efektojn ĉe siaj horizontaj sekcioj, la neta voltkvanto estanta pro la faza diferenco de la elektromovaj fortoj ĉe la vertikalaj membroj. Kurvoj de rezultoj montras tre malgrandajn variojn de la direktoj ricevitaj pere de ĉi-tiu sistemo, dum grandegaj varioj estas ricevitaj per unubobena aparato. Oni konkludas, ke variantaj noktaj eraroj okazas, ne pro deflankiĝo, sed pro la alveno de malsuprenirantaj ondoj polarizitaj, kun la elektra forto horizonta.

R200.—MEZUROJ KAJ NORMOJ.

R220.—La Daŭreco de Normigo de Variebla Kondensatoro.—E. Simeon.

La artikolo diskutas la variecon kapacitan pro vario de la distanco inter la plataro, kaŭzita de suprena kaj malsuprena movado de la centra spindelo. Diversaj mekanikaj detaloj por malgrandigi tiun-ĉi specon de movlibereco estas diskutitaj, kaj ilustrita estas desegnaĵo kie, kiom ajn da movo, tio ne kaŭzos kapacitan ŝanĝon.

R240.—Inductancaj Bobenoj Kvante Komparitaj.—A. L. M. Sowerby.

En Parto Ia (en la Aprila numero), la aŭtoro citas rezultojn de mezurado de diversaj bobenoj, kompare kun normo de konata malgranda perdo, je la frekvenco de la Londona Brodkasta Stacio. La rezultoj ĝenerale montras, ke ju pli maldike la fadeno, des pli alta la rezisteco, kaj ke, se estas optimuma valoro de la diametra longeca proporcio, ĝi estas, ĉe tiuj-ĉi mezuradoj, kaŝita de aliaj faktoroj.

En Parto IIa (Junio), pluaj mezuroj estas montritaj, ilustrantaj la efikon de (*a*) Dielektriko, (*b*) formo de bobeno, (*c*) interspacado, kaj (*d*) dikeco

Digitized by Google

de fadeno. La komparo inter bobeno de malgranda perdo kaj bobeno vindita per sonorila fadeno vakse kovrita montras, ke la diferenco inter ili estas nur 2.5%, kio sugestas, ke dielektrika perdo ne estas grava ĉe unutavolaj bobenoj je brodkastaj ondolongoj.

Rilate al la formo de la bobeno, la mezuroj malkaŝas nenian indikon pri optimuma valoro de D/l (proporcio diametro/longeco). Rilate al interspacado, kurvo por No. 22 kaj por No. 28 *Standard Wire Gauge* (brita Norma Fadena Dikeco) malkaŝas optimuman kondiĉon ĉe interspacado de ĉirkaŭ 1.2—1.4 diametroj de la fadeno. Por optimuma interspacado la dikeco de fadeno faras malpli da diferenco ol estas ĝenerale kredita, la kurvo citita montranta, ke fadeno No. 22 estas nur 6% plibona ol la malpli dika No. 28 ĉe optimuma interspacado. Fina sekcio pritraktas praktikan desegnadon.

R290.—Mezuroj Aŭd-Frekvencaj.

Tiu-ĉi artikolo konsistas el pri-radiaj resumoj el referato " Frekvencaj Karakterizoj de Telefonaj Sistemoj kaj Aŭd-Frekvenca Aparataro, kaj ilia Mezurado." legita antaŭ la Institucio de Elektraj Inĝenieroj, je Aprilo 29a, de S-roj. Cohen, Aldridge, kaj West, de la Brita Ĉef-Poŝtoficeja Esplorada Fako.

Priskribita estas metodo por obteni konstantan elektran elmeton, kontinue varieblan de 0 ĝis 5,000 cikloj. Du radio-frekvencaj oscilatoroj estas aranĝitaj por interbati, la rezulto estante rektifita, filtrita kaj amplifita por doni la bezonitan elmeton. Eksperimentajn rezultojn oni priskribas kaj ilustras, de la respondo/frekvencaj karakterizoj de kelkaj laŭtparoliloj kaj intervalvaj transformatoroj.

R300.—APARATO KAJ EKIPAĴO.

R383.—Fadenaj Anod-Rezistancoj.—F. M. Colebrook.

Priskribo pri konstruo de neindukta rezistanco de malgranda mem-kapacito kaj de valoro de ĉirkaŭ 50,000 omoj. Fendita fundamento estas farita per interfoliigo de ebonitaj diskoj de 1/10-cola dikeco, kaj 1¼-kaj 2¾-cola diametro, kaj la fendoj vinditaj per No. 47a " Eureka " fadeno, duoble kovrita per silko, la vindajoj estante inversitaj je ĉiu 50a turno. La mem-kapacito, oni trovis, estas inter 6 kaj 7$\mu\mu$F por rezistancoj de ĉirkaŭ 50,000 omoj.

R500.—APLIKOJ KAJ UZOJ.

R545.009.2.—Long-Distanca Laborado.—H. N. Ryan.

La perioda rakonto pri longdistanca interkomunikada laboro inter amatoroj.

R800.—NE-RADIAJ TEMOJ.

510.—Matematikoj por Senfadenaj Amatoroj. —F. M. Colebrook.

Daŭrigo de la serio komencita en la antaŭa numero. La temo pri Elementa Algebro daŭras, kaj la jenaj sekcioj pritraktitaj: (1) Krampoj kaj la Negativa Signo, (2) Ripetita Kombino, (3) Etendita signifo de la literaj simboloj, (4) Fizika ekzemplo de la kombino de pozitivaj kaj negativaj numeroj, kaj (5) Komprenado, aŭ sensperta kalkulado.

Correspondence.

Letters of interest to experimenters are always welcome. In publishing such communications the Editors do not necessarily endorse any technical or general statements which they may contain.

Inductance Coils Quantitatively Compared.

Sir,—With reference to the articles by Mr. Sowerby in *E.W. & W.E.* for April and June, I wish to draw attention to the small amount of information gained from the large amount of work, due, presumably, to an insufficient knowledge of the subject.

With the possible exception of his test to compare dielectric losses, there is hardly a result of serious value to other workers, largely on account of the simultaneous change of several variables in each of his series of tests.

After all, the following " postulates " are generally accepted by now among those who have studied the subject; they are based on theory, and have repeatedly been confirmed by test:—

1. For any coil of given dimensions and inductance, there is one optimum size of wire for any given frequency.

2. For geometrically similar coils, the H.F. resistance decreases, to a rough approximation, proportionally as the linear dimensions increase.

3. For single-layer solenoids there is an optimum D/l ratio, of the order of 3.

4. In any coil well designed for the broadcast band of frequencies, the copper losses are of the order of 80-90 per cent. of the total; the dielectric losses are not important.

No. 4 above confirms the test given on page 363 of the June issue, but this test is none the less quite unreliable, for the two coils compared differ not only as to their dielectric losses, but are also unlike in the cross-section of former, in the mean diameter, and in the shape ratio D/l.

Again, consider Tables I. and Ia. Each separate D/l ratio should have its own optimum spacing ratio in order to find which gives the " best best " coil. But all the coils are " close-wound," so the results tell us nothing; this apart from the fact that the diameters as well as the lengths of the coils vary.

In Tables II. and IIa. there is the same trouble: the relative efficiencies of various spacing ratios cannot be isolated, for the coils are all of different shapes.

Apart from these particular objections, it appears to me that the accuracy of his method of measurement is seriously open to question. In every test the resistance of the " short indoor aerial " is in the circuit. This may easily have been of the order of 20 to 40 ohms, and if so would mask any small differences of resistance between various coils. Again, all the coils have apparently been tested at the same frequency on the same condenser setting. There may be large differences of self-capacity between the various coils, and if so there will have been corresponding differences of inductance. If this latter is the case, one would not

Digitized by Google

expect equal resistances nor equal deflections; in any case, the resistances should be corrected for the apparent increase due to self-capacity, and I see no statement as to this.

Lastly, with the source distant 10 ft., there is every possibility that equally good coils may give different deflections due to variations of their absolute size, which will affect the amount of energy directly picked up by them from the source.

I would suggest to Mr. Sowerby that he would produce much more useful results on the following lines:—

(*a*) Several D/l ratios should be selected, say, between 0.2 and 5.

(*b*) A set of coils should be built to each ratio. Each such set of coils should be identical in size, shape and number of turns, and should differ from the others in its set only in the gauge of wire.

(*c*) The gauges chosen should be such that the ratio

$$\frac{\textit{distance between centres}}{\textit{diameter of wire}}$$

varies between close winding and, say, 2.

(*d*) The inductance and self-capacity should be measured first.

(*e*) The H.F. resistance should be actually measured.

(*f*) This should be corrected for self-capacity, and expressed as power factor or "magnification," which is the reciprocal of power factor.

A set of accurate results on these lines, even if not corrected for the other resistances in the circuit (leads, condenser, etc.), would be of immense value, and if Mr. Sowerby or any other reader has the time and energy to undertake it I shall be only too glad to pass on a few hints based on a considerable experience of such work.

Blackheath. P. K. TURNER.

---

j, the Heaviside Operator, and $\sqrt{-1}$.

The Editor, E.W. & W.E.

SIR,—The fundamental importance of the topic discussed so ably in your Editorial of May issue must plead my excuse for craving yet further the courtesy of your columns.

It is, I think, greatly to be deplored that to any symbol so widely used as j can be attached two distinct meanings. Unfortunately the confusion in this case is rendered greater since the two meanings are not widely dissimilar; indeed, it is their very resemblance that constitutes for the tyro his main difficulty.

If, for example, in the rectangular form of vector representation

$$E = a + jb$$

in which j is the vector operator, we substitute the values

$$a = E_1 \cos\phi, \qquad b = E_1 \sin\phi,$$

we obtain the polar form

$$E = E_1(\cos\phi + j\sin\phi) = E_1 \epsilon^{j\phi}$$

often a convenient mode of expression. In this equation, however, j can no longer be regarded as the same operator. For if it were, its behaviour, as you correctly state in equation (2) of your Editorial, would have the effect

$$j \sin\phi = \cos\phi,$$

which is clearly inadmissible.

The source of confusion which lies around this point is a very real one for the student, and in the interests of clear thinking, it behoves us to give earnest consideration to any means of avoiding the difficulty.

The Heaviside notation retains the use of j for the algebraic imaginary $\sqrt{-1}$, and proposes for the vectorial operator the symbol D/ω. As you point out, this is a change of label without any change of principle; and this precisely meets the necessities of the case.

Besides this enormous advantage, the substitution of D/ω for j in vector operations will in most cases simplify the working. For example, the operators LD and $1/CD$ will supersede $j\omega L$ and $1/j\omega C$. Moreover, the symbol D is a constant reminder of the operational character of our work, which cannot always be said of j.

In conclusion, may I be allowed to point out an obvious slip in your Editorial regarding the derivation of $D^2 = -\omega^2$? This, of course, is obtained by a repetition of the operator D to the fundamental equations, and not by squaring and adding them. W. A. BARCLAY.

Murtle, Aberdeenshire.

[With reference to the concluding paragraph of Mr. Barclay's letter, we have pointed out elsewhere that the relation $D^2 = -\omega^2$ can be obtained by simply multiplying the two equations

$$D \sin\omega t = \omega \cos\omega t$$
$$D \cos\omega t = -\omega \sin\omega t$$

together, without any repetition of the operator D.

G. W. O. H.]

ERRATA.

JUNE ISSUE:—

Page 350, *Figs.* 1 *and* 1*a*. "Some Notes on Intervalve Couplings." Caption *should read:*

$$I_a = \mu V_g/(R + R_a)$$

magnification is

$$RI_a/V_g = \mu/\left(1 + \frac{R_a}{R}\right)$$

Page 351, *Fig.* 3.

$$I_a = \mu V_g/(R_a + jx)$$

magnification is

$$\mu/\left(1 + \frac{R_a}{jx}\right) = \mu jx/(R_a + jx).$$

Page 351. *In Fig.* 4 the horizontal scale is marked off in units of henries in the anode circuit per thousand ohms of valve resistance.

Page 351, *col.* 1, *line* 1. *For* ratio *read* percentage.

Page 352, *Fig.* 6. Magnification is

$$\mu/(1 + R_a RC/L)$$

Page 370. "Audio-frequency Measurements." *Col.* 2, *line* 11, *should read*, "A variable condenser C_2 of 0.0005μF maximum is in parallel with one of the condensers C_1 to cover the beat range of 5,000 cycles" (instead of 50,000 cycles as printed).

Digitized by Google

Some Recent Patents. [R008

THE REISZ MICROPHONE.

(*Application date, 25th June, 1925. No. 250,430.*)

The construction of the Eugen Reisz microphone is described in the above British Patent. The microphone is of the carbon granule type, and the novelty of the invention lies in the particular arrangement of the granules, diaphragm and marble supporting block. A good idea of the device can be obtained by reference to the accompanying illustration. The microphone consists of a large heavy block of marble *M*, provided with two tunnels *T*, which contain electrodes *E* which communicate with terminals placed at the back of the marble block. A channel *C* extends between the two tunnels, and the tunnels and the channel are filled with coal dust. The granules are retained in position by means of a stretched rubber diaphragm *D*, which is further covered by gauze *G*, attached to a solid heavy ring *R*. The ring is so placed that it protects the ends of the electrodes *E* and the granules surrounding them from direct

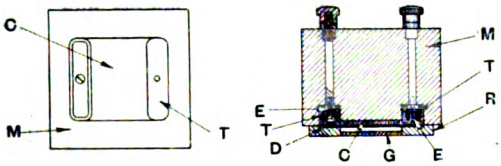

action of sound waves impinging upon them. The specification states that the distance between the stretched rubber diaphragm and the adjacent parallel surface of the channel is of the order of 3 to 4 mm. The size of the grain is given as larger than would pass a sieve of two hundred meshes per square inch, and the pressure of the rubber diaphragm is that of a rubber skin 0.15 mm. thick, and slightly stretched. It is stated that the sound waves of the lower frequencies are absorbed in the deepest layers, while those of the highest frequencies disappear in the uppermost layers. This is supposed to be due to the fact that air passages are formed between the granules, which are permeable by the lower tones but not by the higher tones. We understand that this type of microphone is employed by the British Broadcasting Company.

A MULTIPLE CONE DIAPHRAGM.

(*Convention date (France), 3rd May, 1924. No. 233,356.*)

The Société Française Radio Electrique describe in this British Patent Specification the construction of a diaphragm comprising a number of paper cones. It will be seen from the accompanying illustration that a number of small cones *C*, which are folded from sheets of stiff paper, are attached at their bases to a ring *R* of substantial dimensions, which is supported in any convenient manner. The apices of the cones are rigidly attached to a circular member *K* which is attached by a link *L* to a vibrating system *V*. The specification states

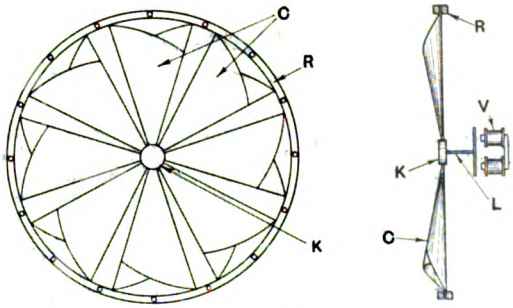

that although the diaphragm is formed of a number of sectors which vibrate more or less as a whole, owing to the fact that the sectors are combined rigidly near their point of actuation the maximum flexibility occurs at their extremities.

PLATE AERIAL.

(*Application date, 20th February, 1925. No. 250,714.*)

The construction of an aerial consisting of a number of insulated plates is described in the above British Patent Specification by W. E.

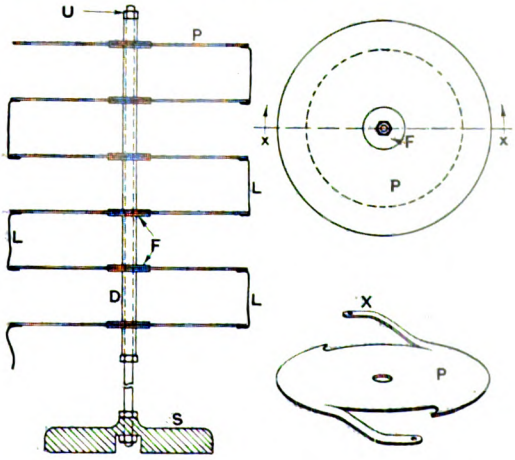

Durrant and K. I. Rayment. Essentially the aerial consists of a number of plates of appreciable area, supported co-axially one upon the other. Thus, in the accompanying illustration, a stand *S* is provided with an upright member *U* which

Digitized by Google

carries the plates. The plates P may be of circular, rectangular, or other shape, and may be spaced apart by means of distances pieces D of insulating material, a flange F of some description preferably being attached to the centre of the plates. The plates are connected at their peripheries by means of short leads L, while in another modification a portion X may be stamped and bent from the actual plate itself to take the place of the connecting leads L.

AN AMPLIFICATION SCHEME.

(*Application date, 4th February, 1925. No. 251,041.*)

A system of amplification is described in the above British Patent by the Western Electric Company, Limited. The object of the invention is to overcome oscillation or singing effects which

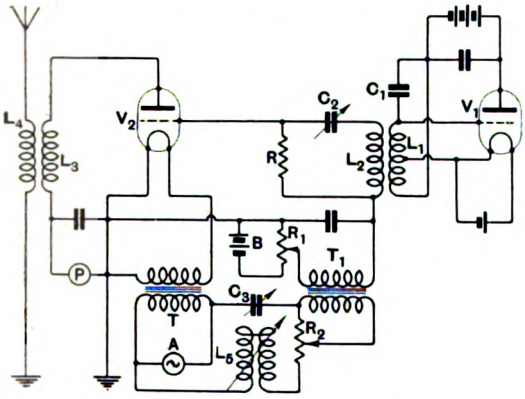

are liable to occur, particularly in high frequency amplification, more especially in power amplifiers if used with high power transmitters. The accompanying illustration indicates the scheme, and also includes a device for coupling the alternating current supply to be used for heating the filament of the power amplifier. Thus, in the accompanying illustration, a valve V_1 is arranged as an oscillator, and is coupled by an inductance L_1 and a capacity C_1 with a centre tap. This is coupled to a resonant circuit L_2 C_2 R, the resistance R being connected between the grid and filament of the amplifying valve V_2, the anode circuit being supplied with a source of power P. The anode circuit of the valve V_2 contains the inductance L_3 coupled to the aerial inductance L_4. The filament of the valve V_2 is heated by alternating current derived through the medium of a transformer T from a source A. The grid of the valve V_2 is negatively biased by a source of negative potential B, the amount of which is controlled by a potentiometer R_1. Another transformer T_1 has its secondary winding included in the grid circuit of the valve V_2, the primary winding of the transformer being energised from the source of supply A. The voltage applied to the primary of this transformer is controlled by a potentiometer R_2. It is well known that the emission from the filament of the valve V_2 will vary according to the potential existing across the filament, a time lag occurring due to the thermal inertia, maximum emission occurring just after maximum current, and *vice versa*. In order to compensate for the variation in emission and prevent variation in output, which would give rise to a modulation effect and variation of received current, the grid potential is purposely modulated in such a way as to obtain substantially constant anode current. Thus it will be seen that the primary of the transformer T_1 which is energised from the source of filament current A is connected through a resistance R_2, capacity C_3 and a variable inductance L_5. The inductance and capacity act as a phasing device, while the resistance, or potentiometer R_2, controls the amplitude of the potential applied to the grid. By suitably adjusting the value of R_2, C_3 and L_5 a substantially constant output can be obtained.

A CONICAL DIAPHRAGM.

(*Convention date (U.S.A.), 21st October, 1924. No. 241,869.*)

The construction of a loud-speaker embodying a conical diaphragm is described by the British Thomson-Houston Company Limited and W. B. Potter in the above British Patent. A good idea

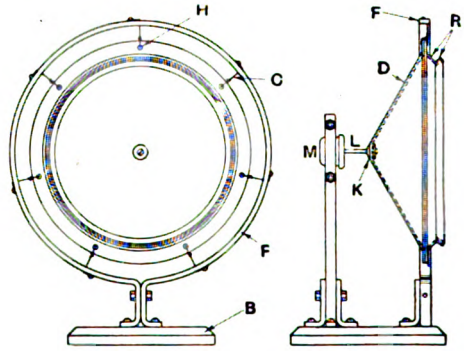

of the general arrangement of the loud-speaker can be gathered by reference to the accompanying illustration, in which it will be seen that the diaphragm D is in the form of a cone, and is made of stiff paper, or similar light material, is flanged at the periphery, and is reinforced with a metal or similar ring at R. A number of holes H are arranged round the periphery and contain lengths of cords C by means of which it is further supported from a circular framework F, attached to the base B. The apex of the cone is fixed to a conical clamp K, which is connected by a link L to a movement M. In one modification of the invention the movement M comprises an ordinary electromagnetic receiver provided with a diaphragm to which the link is attached. The specification includes constructional details of various minor points, upon which the success of the loud-speaker no doubt depends.

Digitized by Google

EXPERIMENTAL WIRELESS & The WIRELESS ENGINEER

VOL. III. AUGUST, 1926. No. 35.

Editorial.

Esperanto and Technical Literature.

WE note that the *Electrician* is following our example in inviting their readers' opinions on the advisability of publishing summaries in Esperanto of articles appearing in the technical press. In the number of 9th July, the matter is discussed editorially under the above heading. It is objected that, being an artificial and not a natural language, Esperanto is not a vehicle of thought, by which is meant that it is not a language in which anybody thinks, but is merely a link between two other languages. It is admitted, however, that although from the literary standpoint this may cause a serious reduction in quality, this may not be of great importance in the case of a summary of a technical work. In the same issue of the *Electrician* there is a letter from a correspondent, which puts the case for a simple *auxiliary* language, such as Esperanto, very clearly. We shall watch with interest the response to the *Electrician's* invitation.

Valve Nomenclature.

IN our February issue we pointed out that the word "impedance" was being misused when applied to the ratio dV/dI of a valve, and we suggested that the correct term was "differential resistance." We have been pleased to note that several writers have adopted the suggestion. It was objected, however, that "anode differential resistance" was a cumbersome mathematical term which would not commend itself to valve manufacturers and users. The name finally adopted by the Committee of the British Engineering Standards Association which dealt with radio nomenclature—of which Committee the writer was a member—was "Anode A.C. resistance." Although not quite so mathematically definite as our original suggestion, in that it takes for granted that a small alternating current is superposed upon the steady direct current, and although in the matter of cumbersomeness "alternating current" is little, if any, improvement on "differential," it was felt that it would be more acceptable to valve makers and users and therefore more likely to displace the term "anode impedance," the use of which the Committee deprecated. It is to be hoped that all writers will now adopt this new term. We take this opportunity of drawing attention to the British Standard Glossary of Terms used in Electrical Engineering which has just been published by the British Engineering Standards Association, and about which we shall have more to say on another occasion.

In the *Electrician* of 11th June, a writer referred to the "curious but very common custom of referring to the ratio dV/dI as the anode *impedance*," and stated that, as it was of the nature of a pure resistance, there was no excuse for it. This remark led to some correspondence which brought out very clearly the disadvantages under which those labour who do not regularly read *E.W. & W.E.*

Digitized by Google

A New Theory of the Lead Accumulator?

By Prof. G. W. O. Howe, D.Sc. **[621.355.01**

THE theory of the chemical action occurring during the charging and discharging of the lead accumulator has always been unsatisfactory. The simple formulæ given in most text-books of electrical engineering were known to be incorrect—mere rough approximation to the actual changes which take place—but although chemists were ready to point this out they were not able to give a satisfactory alternative. Nothing can be a more effective hindrance to the development of any apparatus than ignorance of the principles underlying its operation, and there is little doubt that our ignorance of what really takes place in the lead accumulator has been one of the principal causes of the lack of development. As a proof of this we have only to draw attention to the fact that the new theory recently put forward by MM. Féry and Chéneveau led immediately to the design of a new type of lead accumulator which is alleged to be free from sulphation even if left standing discharged for many months or even years. As it is almost impossible to get beyond the crystal detector stage of radio telegraphy without being forced to cultivate an interest in the lead accumulator, we feel sure that our readers will be interested in this new theory and its developments.

The Old Theory.

According to the old theory the active material in the positive plate of the charged cell was lead dioxide (PbO_2) and that in the negative plate spongy lead. During the discharge the PbO_2 was first reduced to lead monoxide (PbO) and then converted to lead sulphate ($PbSO_4$); similarly the spongy lead in the negative plate was oxidised to PbO and then converted to lead sulphate. The complete process can be represented by the formula

$$\underset{-\ \ \textit{charged}\ \ +}{Pb + 2\,H_2SO_4 + PbO_2} \rightleftarrows \underset{-\ \ \textit{discharged}\ \ +}{PbSO_4 + 2\,H_2O + PbSO_4}$$

The left hand side represents the active materials when fully charged and the right hand side when discharged. According to this theory the normal discharge of the cell is associated from the very beginning with the production of lead sulphate, but this production must not be allowed to proceed too far or the cell becomes "sulphated"—one should perhaps say "super-sulphated"—and is very difficult to recharge. No very clear explanation has ever been given why the lead sulphate produced after the voltage has fallen to about 1.8 should be so much more harmful than that produced before, whether it differs in physical constitution or whether it is simply a question of quantity.

The New Theory.

According to the theory put forward by M. Féry and supported by considerable experimental data, the active material of the fully charged positive plate is a higher oxide (Pb_2O_5): during the normal discharge this is reduced by the liberated hydrogen to the dioxide PbO_2, whilst the spongy lead of the negative plate is converted to a black lead sulphate or plumbous sulphate Pb_2SO_4, not the plumbic sulphate $PbSO_4$ of the older theory. The changes during charge and discharge would then be represented by the formula

$$\underset{-\ \ \textit{charged}\ \ +}{Pb_2 + H_2SO_4 + Pb_2O_5} \rightleftarrows \underset{-\ \ \textit{discharged}\ \ +}{Pb_2SO_4 + H_2O + 2\,PbO_2}$$

To test the correctness of the theory two accumulators were made up in such a way that in one the positive plate was suspended from the arm of a balance, the negative plates being fixed, whereas in the other the negative plate was suspended between two fixed positive plates. Owing to there being one suspended plate and two fixed plates one was certain that the discharge was limited by the chemical action of the suspended plate. The plates were made by pasting

Digitized by Google

a grid of antimony lead with a paste of red lead (Pb_3O_4) and ammonium sulphate; after drying in an oven for 36 hours, then soaking in sulphuric acid for an equal time and redrying, the plates were formed for about three days. After drying and weighing they were placed in the electrolyte, and submitted to successive discharging and charging whilst an accurate record was made of the weight of the suspended plate. Very elaborate precautions were necessary to avoid various sources of error; those interested in the details will find them fully described in the *Bulletin of the Société Française des Electriciens* for January, 1926. The amount of active material on each plate was about 100 grammes, the plates being $104 \times 104 \times 2$ mm. divided into 144 square meshes about 8×8 mm.

According to the older theory the weights of the active materials should change during *discharge* as follows:—

Positive plate—*increase* of weight=26.8 per cent.,

Negative plate=*increase* of weight=46.4 per cent.,

whereas according to the new theory the changes should be as follows:—

Positive plate—*decrease* of weight= 3.2 per cent.

Negative plate—*increase* of weight= 23.2 per cent.

The changes of weight actually observed should therefore enable one to decide definitely between the two theories.

Now the results obtained did not agree with either theory although they were closer to those predicted on the new theory. It was then suggested that a secondary reaction occurred in the cell due to the fact that the electrolyte could not be regarded merely as acidulated water but must be looked upon as a saturated solution of lead sulphate in acidulated water. During discharge the electrolysis of this solution liberates the ion Pb at the positive plate and gives rise to the reaction

$$Pb + Pb_2O_5 + H_2SO_4 = 2PbO_2 + PbSO_4 + H_2O.$$

This reduction by the lead would cause an increase in the weight of the positive plate, whereas, as was pointed out above, the reduction by the hydrogen in the main reaction would cause a decrease of weight, the resultant change of weight being due to the difference between the two effects. It will be noticed that according to this theory lead is transferred during the discharge from the negative to the positive plate. As the result of experiment it is further assumed that a secondary reaction occurs at the negative plate during discharge, represented by the formula

$$Pb + H_2SO_4 + O = PbSO_4 + H_2O,$$

and that the weight of lead involved in this reaction is about a tenth of that involved in the transformation to Pb_2SO_4.

Experiment Supports the New Theory.

This theory gives results in strict accordance with the experiments, whereas the old theory gives results which cannot possibly be made to agree with the observations. As an example of the discrepancy in the experimental discharge already referred to, in which the old theory would lead one to expect an increase of 26.8 per cent. in the weight of the active material in the positive plate and of 46.4 per cent. in that of the negative, the increases actually observed were only 5.2 and 10.2 per cent. respectively. The new theory, without the secondary reaction, would as mentioned above give an increase of 23.2 per cent. in the negative plate, but a decrease of 3.2 per cent. in the positive plate. The actual increase of weight of the negative plate is thus much smaller than either theory would give without the secondary reaction which, by transferring lead from the negative to the positive plate, brings the new theory into agreement with the observed results.

Why the Discharge Curve drops at 1.8 volts.

M. Féry described experiments made with a cell in which the positive plate preponderated so that the discharge was limited by the exhaustion of the negative plate; in this case the discharge curve shows a very rapid drop at the end of the discharge and the resistance of the cell is found to increase rapidly. This is according to M. Féry due to the transformation of all the available lead in the negative plate to Pb_2SO_4—the conducting sulphate; at this moment P.D. is 1.8 volts and, as the positive plate is still active, its oxidising action continues and the Pb_2SO_4 tends to change into the insulating sulphate $PbSO_4$. One cannot explain this phenomenon on

Digitized by Google

the old theory, according to which the latter sulphate was being formed all the time.

If the negative plate preponderates the discharge will be limited by the exhaustion of the positive; in this case the fall of potential is less sudden and is not due to an increase of internal resistance but to a decrease of E.M.F. This is due, according to M. Féry, to the disappearance of all the Pb_2O_5 leaving only PbO_2, which gives a much lower E.M.F. when acting as the positive plate material.

What is Sulphation?

It was always difficult to understand why it was so easy to recharge a cell immediately after it had been discharged and yet so difficult to do so if it had been left standing for some time, seeing that the normal discharge was supposed to produce lead sulphate. One explanation was that the crystals of lead sulphate normally produced were very small, but gradually grew when the cell was left standing. On the new theory this is explained in a very simple way. The sulphate in the negative pastilles produced during normal discharge is the conducting black sulphate Pb_2SO_4. This has a strong tendency, however, in the presence of sulphuric acid to pass into the insulating white sulphate $PbSO_4$, and it is this change which causes "sulphation." It will go on rapidly at the surface, but slowly in the interior where the acid penetrates but slowly.

A Cell which cannot Sulphate.

These considerations have led to the design of a non-sulphating cell. The underlying idea is to protect the negative plate from the oxidising action of the air and of the Pb_2O_5 of the positive plate. The negative plate consists of a single slab of paste at the bottom of the cell whilst the positive plate is placed vertically above it. The negative plate is thus protected from the air and from the action of bubbles of oxygen rising from the positive plate. The electrodes are kept in position by packing the cell with a granular porous silica material which also protects the lower plate from particles falling from the upper one. M. Féry stated that cells made in this way may be left discharged for two years without sulphation; they may then be charged and put into service without any difficulty or loss of capacity. He also said that their loss of charge when left standing on open circuit is less than a tenth of that of the ordinary cell with vertical plates. At the meeting in Paris, M. Féry showed some small 20-volt batteries for use in anode circuits made on these principles by the firm of Gaiffe, Gallot et Pilon.

If these claims can be substantiated—and there is no question of the scientific ability and good faith of those who make them—an important step has been made in the design of the lead accumulator. The construction employed does not appear to lend itself to incorporation in cells of large capacity and it is noteworthy that the cells actually shown were only suitable for anode circuits, but this is an application which will appeal to many of our readers. If these do all that is claimed for them and the new theory is substantiated, ways will undoubtedly be discovered of applying the new principles to the improved construction of all classes of accumulators.

Digitized by Google

Use of Plate Current—Plate Voltage Characteristics in Studying the Action of Valve Circuits.

By E. Green. **[R131**

(*Continued from page 406 of July issue.*)

Amplification.

(A) *Resistance Amplifiers.*

The conditions to be fulfilled vary in different cases. In the reception of wireless signals, and the first stages of audio amplification, what is required is the maximum step up in voltage per valve, the actual amplitude of alternating grid voltage being small.

In the case of amplifiers using non-inductive resistances, as the output circuit (as shown in Fig. 3*a* and more particularly Fig. 7*b*) we have to find the condition giving maximum voltage variation at the terminals of R_e for a given variation of grid voltage on the first valve. In Fig. 7*b* are shown the normal connections from the grid of the first valve to that of the second. R_g is usually a resistance of 1 or 2 megohms, and the grids are made negative by means of the batteries B_1 and B_2 respectively. The blocking condenser C is so large that its reactance $(1/C\omega)$ is small (over the range of frequencies to be amplified) compared with R_g. Hence for alternating currents R_g is substantially in parallel with R_e. The effective resistance of the output circuit for A.C. is therefore

$$\frac{R_e R_g}{R_e + R_g}$$

and it is this that fixes the slope of the working line and therefore the amplification. Normally, R_g is large compared with R_e and hardly affects the resistance of the output circuit. In what follows we shall use R_e to denote the effective A.C. resistance of the output circuit, which would more accurately be expressed as

$$\frac{R_e R_g}{R_e + R_g}\,*$$

Let the variation in grid voltage on the first valve be such as to carry the working line RS from curve 1 to curve 3 (Fig. 9). $R'S$, the projection of RS on OX, gives the corresponding variation of plate voltage. This will be a maximum $= S'S$ when RS is horizontal, *i.e.*, when $R_e = \infty$. The amplification in voltage is then represented by the change in plate voltage $S'S$ divided by the change in grid voltage between curve 1 and curve 3.

i.e. step up $= \dfrac{\text{change in plate voltage}}{\text{change in grid voltage}}$

when the plate current is kept constant. This amplification is usually denoted by μ or m.

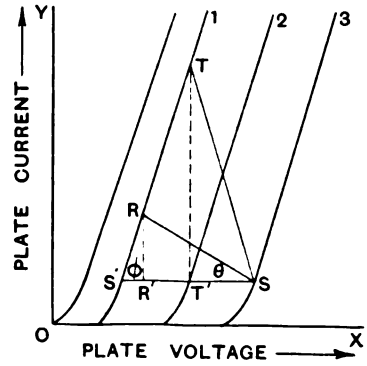

Fig. 9.

Hence for $R_e = \infty$ we can write

Voltage amplification $=$

$$\left(\frac{dE_p}{dE_g}\right)_{I_p \text{ constant}} = \mu.$$

* NOTE.—If R_g is of the same order as, or less than, R_e the accurate expression must be used. In this case also it is to be noted that the D.C. component of plate current flows through R_e only. If the grid bias is adjusted so that the mean plate current is I_p, the mean plate voltage is $(E_0 - R_e I_p)$. This fixes the mean working position D of Fig. 3, whilst $\cot\theta = \dfrac{R_e R_g}{R_e + R_g}$ fixes the slope of the working line. This line will therefore not pass through A (where $OA = E_0$) but to the left of A.

Digitized by Google

For any other value of R_e we have,

$$\text{Voltage amplification} = \frac{R'S}{S'S}\,\mu.$$

Now $$\tan\theta = \frac{1}{R_e} = \frac{RR'}{R'S}$$

and $$\tan\phi = \frac{1}{R_o} = \frac{RR'}{S'R'}$$

where R_o = internal resistance of valve

$$= \left(\frac{d\,E_p}{d\,I_p}\right)_{E_g \text{ constant}}$$

Therefore, $$\frac{R'S}{S'S} = \frac{R'S}{S'R + R'S} + \frac{R_e}{R_o + R_e}$$

Hence for any value of R_e we have,

$$\text{voltage amplification} = \frac{R_e}{R_o + R_e}\,\mu$$

For the pure resistance amplifier it is not advisable to make R_e very large, as if E_o is fixed it reduces the voltage on the valve and will bring the working line on to the curved part of the characteristics, and beyond $R_e = R_o$ when its value is $\frac{1}{2}\mu$ the amplification only increases slowly.

For the amplifier using a choke in the plate circuit and resistance in the grid the plate voltage is not affected by change in R_e so that R_e can be made much greater than R_o and practically the full step up μ be obtained.

(B) *Transformer or Tuned Circuit Amplifiers.*

For the amplifiers using transformers or tuned circuits maximum amplification will be obtained when the output power is a maximum for a given amplitude of grid voltage.

Let 1, 2, 3, Fig. 10, be characteristics separated by differences of grid voltage equal to amplitude of variation of grid voltage, so that for any value of R_e the working line JDK will just extend from 1 to 3.

Draw DM and KR perpendicular to LK.

Then AC output power $= \frac{1}{2}\,DM.\ MK$ = area of triangle DMK.

It is required to find the value of R_e for which the area of DMK is a maximum.

We have $$\tan\phi = \frac{DM}{LM} = \frac{I}{R_o}$$

$$\tan\theta = \frac{DM}{MK} = \frac{I}{R_e}$$

i.e. $LM : MK : LK = R_o : R_e : (R_o + R_e)$

$$\frac{\text{area of triangle } DMK}{\text{area of triangle } DML} = \frac{MK}{LM} = \frac{R_e}{R_o}$$

$$\frac{\text{area of triangle } DML}{\text{area of triangle } RKL} = \left(\frac{LM}{LK}\right)^2 = \left(\frac{R_o}{R_o + R_e}\right)^2$$

$$\therefore \text{ area of triangle } DMK = \frac{R_e}{R_o} \times \left(\frac{R_o}{R_o + R_e}\right)^2 \text{ of triangle } RKL$$

Putting $$\frac{R_e}{R_o} = k.$$

And triangle $RKL = \frac{1}{2}\,RK.\ KL$

$$= \tfrac{1}{2}\,LK^2 \tan\theta$$

$$= \tfrac{1}{2}\,\frac{(\mu\,eg)^2}{R_o} = \text{constant for a given voltage of } e_g$$

where e_g = amplitude of grid voltage swing

$$\text{area of triangle } DMK = k\left(\frac{1}{1+k}\right)^2 \times \tfrac{1}{2}\,\frac{(\mu\,e_g)^2}{R_o}$$

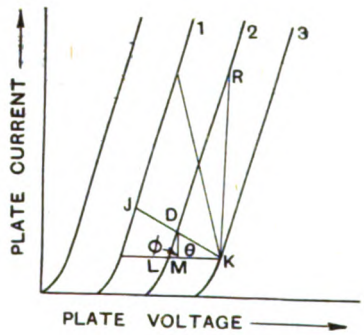

Fig. 10.

Now $$k\left(\frac{1}{1+k}\right)^2 = \left(\frac{1}{\frac{1}{\sqrt{k}} + \sqrt{k}}\right)^2$$

and $\frac{1}{\sqrt{k}} + \sqrt{k}$ is a minimum when $\frac{1}{\sqrt{k}} = \sqrt{k}$ *i.e.* when $k = 1$.

Therefore $k\left(\frac{1}{1+k}\right)^2$ is a maximum when $k = 1$ (when its value is $\frac{1}{4}$) that is when $R_e = R_o$.

Therefore power output and step up is a maximum when $R_e = R_o$

$$\text{when power output} = \tfrac{1}{8}\,\frac{(\mu\,e_g)^2}{R_o}$$

The step up in grid voltage will depend on the actual circuit. Take the case of the

Digitized by Google

transformer amplifier Fig. 11*a* as used for audio-frequency amplification. If r = grid filament resistance, the best step up ratio for the transformer is $\sqrt{\frac{r}{R_o}}$ (since this makes

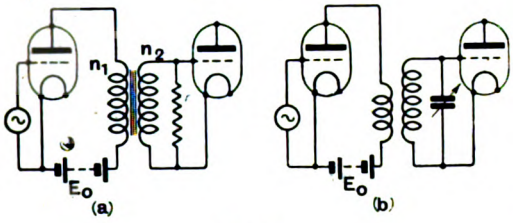

Fig. 11.

the load in the plate circuit $= R_o$), and if e_{g1} = amplitude of voltage at secondary terminals, then neglecting losses in the transformer, we have

$$\text{Power supplied to } r = \tfrac{1}{2}\frac{e_{g1}^2}{r} = \text{Input}$$

$$= \tfrac{1}{8}\frac{(\mu\, e_g)^2}{R_o}$$

$$\text{Voltage step up} = \frac{e_{g1}}{e_g} = \frac{\mu}{2}\sqrt{\frac{r}{R_o}}$$

In the case of an ordinary receiving valve, R_o may be about 10,000 ohms, while if there is no grid current r may be 1,000,000

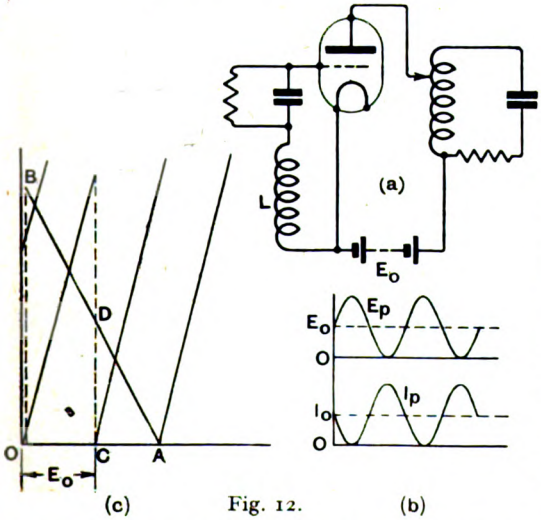

Fig. 12.

ohms. This makes the transformation ratio $\sqrt{\frac{r}{R_o}} = 10$. A more usual figure is about 5, giving a voltage step up of 2.5μ.

Compare this with the resistance type of amplifier in which the maximum step up is less than μ.

In the case of H.F. amplification the effect of a step up transformer is obtained by means of a tuned circuit as Fig. 11*b*.

Oscillating Circuits and Power Amplifiers.

The circuit will be somewhat as shown in Fig. 12*a*.

In either case we have a certain E.M.F. in the grid coil L. Hence in sinusoidal working if R_e is varied the A.C. output in the plate circuit will be a maximum when $R_e = R_o$, as we have just proved in the case of small

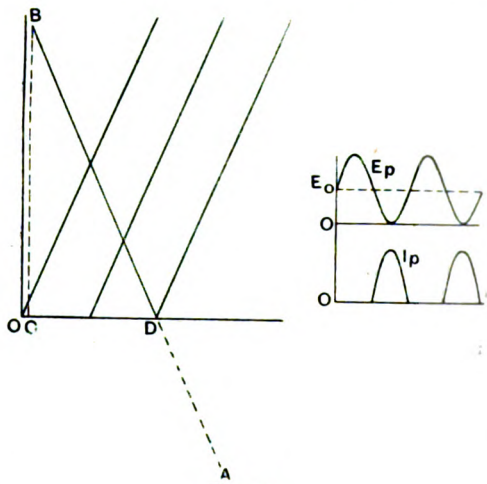

Fig. 13.

amplitudes of grid voltage. The effective R_e can be adjusted to the valve by the anode tap.

If we are restricted to sinusoidal working, but can run into grid current, the working line will be BDA, D being the midpoint. The plate current and plate voltage will be as shown in Fig. 12*b*, and the efficiency will be 50 per cent. In actual practice the plate volts will not drop absolutely to zero.

For conditions of working such as are shown in Fig. 13 where D is midpoint of a grid swing of fixed amplitude in which the plate current is zero over half the cycle and more or less sinusoidal over the other half, the condition $R_e = R_o$ will still be the one giving maximum output. For the A.C. output is proportional to $BC.\ CD$ and as before this is a maximum when $R_e = R_o$.

Digitized by Google

The efficiency now however will be about 70 per cent. In the usual power oscillating circuit the gird has such a large negative bias that the plate current only flows for a small fraction of the cycle. In such a case $R_e = R_o$ is not necessarily the best condition.

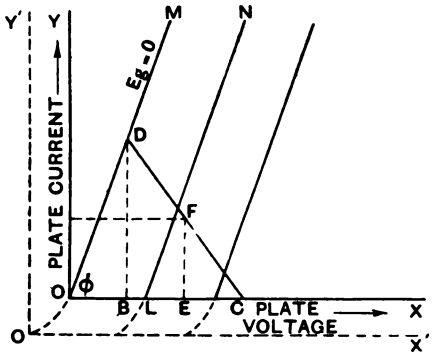

Fig. 14.

Distortionless Power Amplifiers.

In a power amplifier, such as would be used in the last stage of audio-magnification for loud speakers and so on, it is essential to have no distortion. We have to obtain the maximum output, keeping to the straight part of the plate characteristics, and keeping in the region of zero grid current. Maximum amplification is a secondary consideration.

Fig. 14 shows plate current—plate voltage characteristics in the ideal case where they are straight lines, such as OM, LN, etc.; OX and OY are the axes. For simplicity, we assume the type of circuits shown in Fig. 6 (*a*)—(*b*) as there is then no direct current loss in the load. Let the steady H.T. volts (E_o) on the plate be OE.

In working the alternating component must carry the instantaneous plate voltage, equal amounts above and below the mean value OE; for example to two points B and C where $BE = EC$. Let us find what range of variation (and therefore what value of R_e) will secure maximum output.

The vertical BD cuts the characteristic for zero grid volts in D. This characteristic represents one limit for distortionless working, the other being OX', the line of zero plate current. Hence DFC is the working line giving maximum A.C. output for this range of variation of plate voltage, since it gives the maximum variation in plate current.

For this line DFC we have

Max. value of A.C. component of plate

volts .. .. $= BE$ or EC

current .. .. $= EF$

A.C. output $= \frac{1}{2}\, EC.\, EF = \frac{1}{8}\, BD.\, BC.$

$BD = OB \tan \phi = (OE - \frac{1}{2}\, BC) \tan \phi$

$BD.\, BC = (OE - \frac{1}{2}\, BC)\, \frac{1}{2}\, BC \times 2 \tan \phi$

The sum of the first two factors is constant. Hence the expression is a maximum when the factors are equal, *i.e.*, when

$$OE - \tfrac{1}{2}\, BC = \tfrac{1}{2} BC$$

or

$$OB = BE = EC$$

that is when the amplitude of plate voltage swing $= \frac{1}{2}\, E_o$.

The resistance of the output circuit R_e is then

$$\frac{BC}{BD} = \frac{2.OB}{BD} = 2R_o$$

where R_o is internal resistance of valve.

With this condition

A.C. output $= \frac{1}{2}\, EC.\, EF$

$= \frac{1}{2}\, \frac{1}{2}\, E_o\, I_o = \frac{1}{4}\, E_o\, I_o$

D.C. input $= E_o\, I_o$

Efficiency $= 25\%$

The condition $R_e = 2R_o$ does not give the maximum efficiency, and therefore not the maximum possible output when the anode voltage is also variable, but it gives the maximum output for a fixed anode voltage, and if the valve is then not overloaded, it will be the best condition for that voltage.

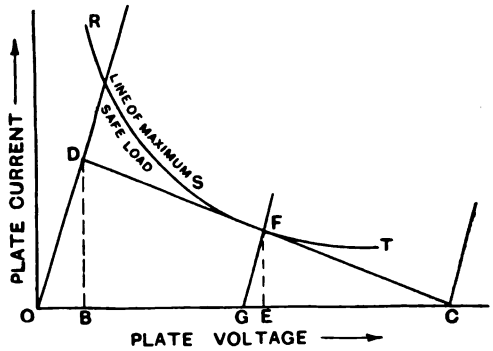

Fig. 15.

We can obtain greater efficiencies by increasing the resistance of the output circuit and raising the anode voltage as shown in Fig. 15 where DFC is working line.

Digitized by Google

For the last stage of audio amplification supplying a loud speaker, the output circuit will either be (1) a transformer as shown in Fig. 6 (*e*) (if the loud speaker is of the moving coil type). In this case the effective resistance of the output circuit can be adjusted to the required value by varying the ratio of transformation of the transformer; or it will be (2) the coils of the loud speaker itself (in the fixed coil type). The effective resistance of this is altered by altering the number of turns in the coils. Note that the effective resistance of the output circuit is *not* the ohmic resistance of the coils.

The fuller treatment of this would require a separate article, as neither transformer nor coils can be regarded as equivalent to a pure resistance over the range of frequencies with which they have to deal.

If either the resistance of the output circuit R_e or the maximum possible H.T. voltage is decided, we can determine the other, using the hyperbola of safe load, *RST*. This is a curve drawn so that the product $E_p \cdot I_p$ for all points on it is constant and equal to the watts that can safely be dissipated by the anode. Provided the mean working position is not above this curve the valve will not be overloaded.

(A) Given *OE* the anode voltage; draw *EF* to cut the hyperbola in *F* and *FG* parallel to *OD*. Make $OD = 2GF$ and draw *DFC* which will be the working line; for which $R_e = \frac{EC}{EF}$

(B) In the other case, if R_e is resistance of output circuit, the slope of *D FC* is fixed and by trial a position can be found where *F*, a point on the hyperbola, bisects *DC*.

With ideal characteristics, and R_e and high tension volts indefinitely great, the limit of efficiency would be 50 per cent. In actual valves it will not be possible to work down to zero plate current on account of the bend in the characteristics causing distortion. (The ends of the characteristics and the actual axes are shown dotted in Fig. 14.) The condition $R_e = 2R_o$ holds good as before, *i.e.*, it will give the maximum output for a fixed anode voltage and will be the best working condition if the valve is not then overloaded. It can be seen from the figure that the efficiency will be less than 25 per cent. Increasing R_e and the high tension volts, and altering the grid bias to suit, will increase the efficiency, but the upper limit will be less than 50 per cent. Usually it is not worth while making R_e greater than five or six times R_o. For the sake of economy

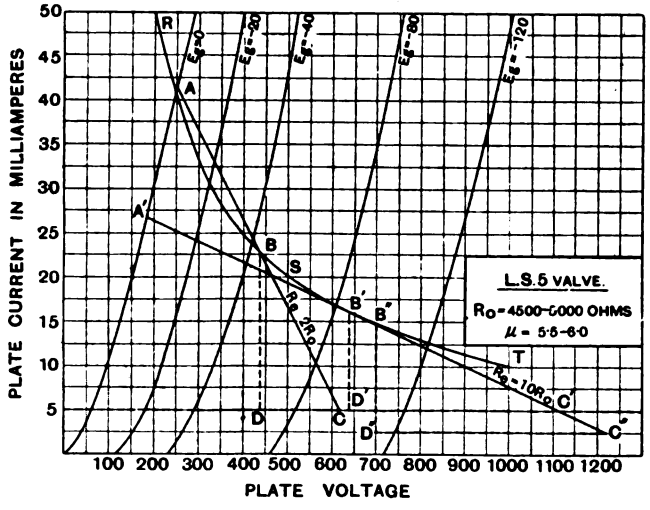

Fig. 16.

it is preferable to keep the anode voltage low. This entails for efficient working the use of a valve with a low value of plate resistance R_o. The lower this can be made, the better it is for the efficiency. To make R_o low, the grid and anode should be flat, enclosing a zigzag filament, and both should be as close to the filament as possible. Also the grid should have a very open mesh. Unfortunately, these conditions, more especially the last one, give a valve with a low value for μ the amplification factor. Also we saw that the maximum power amplification is obtained when $R_e = R_o$. With $R_e = 6R_o$ the amplification will be lower. For both these reasons a greater swing of grid voltage has to be provided.

Examples.

1. *LS5 Valves.*

Fig. 16 gives the characteristic curves of the LS5 valve. *RST* is the curve of maximum safe loss which is 10 watts. Also we

Digitized by Google

conclude we cannot swing the plate current below 5mA on account of the bend in the characteristics.

The plate resistance of the valve $R_o = 4{,}500$ to 5,000 ohms.

The amplification factor $\mu = 5.5$ to 6.

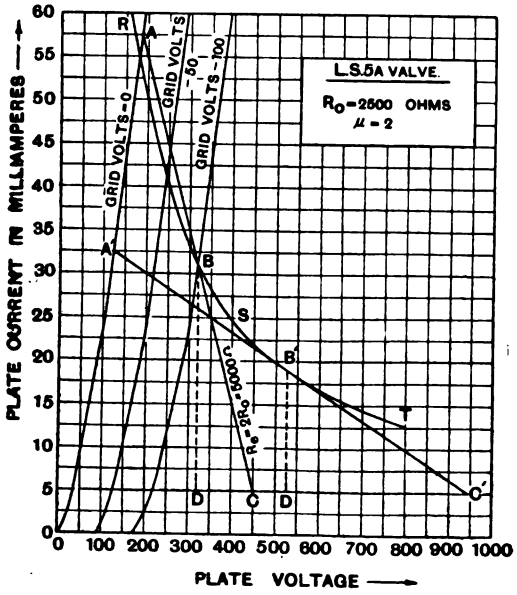

Fig. 17.

For $R_e = 2R_o$ the working line giving 10 watts loss is ABC. This gives an A.C. output $= \frac{1}{2}BD \,.\, DC = \frac{1}{2}\,\frac{18.0 \times 190}{1{,}000}$

$= 1.71$ watts.

Efficiency = 17 per cent.

This requires a plate voltage of 440 volts, grid negative —45 volts.

Hence for all plate voltages less than 440, $R_e = 2R_o$ will give the maximum possible A.C. output.

If we multiply the voltage scale by $\frac{1}{2}$ and the current scale by 2, R_o is reduced to a quarter its old value, and the 10 watts loss line is unchanged; 220 volts will now be the minimum plate voltage to give efficient working at 10 watts loss.

Returning now to the $LS5$, if we increase R_e to 45,000 ohms we get a working line $A'B'C'$. This gives an A.C. output

$= \frac{1}{2}\,B'D' \,.\, D'C'.$

$= \frac{1}{2} \,.\, \frac{10.7 \times 470}{1{,}000} = 2.52$ watts.

This is some improvement on the other arrangement but needs 640 volts on the plate and a grid bias of —87 volts. The gain would be greater if it were possible to work to lower values of plate current; and this should be possible with the higher resistance in the plate circuit. Thus if we worked to a minimum plate current of 2.5mA, the working line would be $A''B''C''$.

Power output $= \frac{1}{2}\,B''D'' \,.\, D''C''$

$= \frac{1}{2}\,\frac{12.0 \times 520}{1{,}000} = 3.1$ watts.

Efficiency = 31 per cent.

It is clear that what is needed is a valve of much lower resistance (*i.e.*, R_o) to allow of efficient working at lower plate voltages.

Fig. 17 shows the characteristic curves of the LS5A valve, which has a special open mesh to give low resistance ($R_o = 2{,}500$ ohms). RST is the 10-watts loss line. ABC is the working line when $R_e = 2R_o$ whilst $A'B'C'$ is that for $R_e = 11.5R_o = 28{,}700$w. Taking 5mA as the minimum value for the plate current, we have,

Output for $ABC = \frac{1}{2}\,BD \,.\, DC = \frac{1}{2}\,\frac{26 \times 130}{1{,}000}$

$= 1.69$ watts.

Plate voltage = 310.

Grid negative = —100 volts, whereas,

Output for $A'B'C' = \frac{1}{2}\,B'D' \,.\, D'C'$

$= \frac{1}{2}\,\frac{13.7 \times 410}{1{,}000}$

$= 2.8$ watts.

Plate volts = 530.

Grid negative = —225 volts.

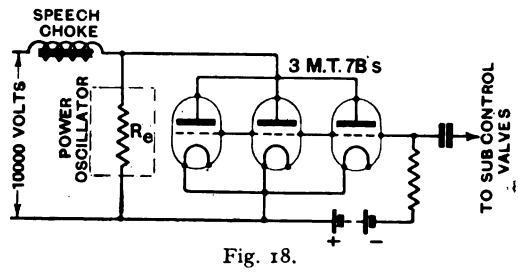

Fig. 18.

Note that in all cases the negative grid bias is a measure of the grid swing required to produce maximum output. Thus in the last case cited the amplitude of grid swing is 225 volts.

Digitized by Google

2. *Modulation on 6kW Broadcasting Transmitter using Choke Control.*

The modulation panel of the 6kW broadcasting set, as used in the British Broadcasting Company's stations, can also be analysed on the above lines. The circuit is as shown in Fig. 18, the power oscillator taking the place of the external load.

We have, $E_o = 10{,}000$ volts.

Power oscillator takes 150mA.

$$\therefore \quad R_e = \frac{10{,}000}{.15} = 67{,}000 \text{ ohms.}$$

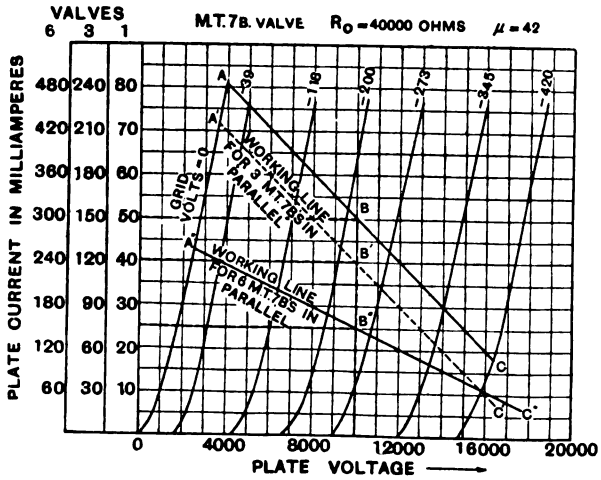

Fig. 19.

From the characteristics of MT7B valves (Fig. 19)

$R_o = 40{,}000$ ohms for one valve,

$= 13{,}300$ ohms for three valves in parallel.

So that $\dfrac{R_e}{R_o} = 5$.

Each valve has a safe loss of 500 watts. From the curves Fig. 19, we see that the working line for this case is ABC, or possibly $A'B'C'$, without much distortion.

For this line the possible range of modulation is 6,400 volts and 95mA.

$$\text{A.C. output} = \tfrac{1}{2} + 6{,}400 \times .095$$
$$= 305 \text{ watts.}$$

For line $A'B'C'$ input to modulators is 1.2kW.

$$\therefore \quad \text{Efficiency } \frac{305}{1{,}200} = 25 \text{ per cent.}$$

The possible depth of modulation is 64 per cent.

If we had 6 MT7B's in parallel with 1.5kW total loss the working line on the new scale would be $A''B''C''$ giving a range of 7,400 volts and 110mA.

$$\text{A.C. output} = \tfrac{1}{2} \times 7{,}400 \times .110 = 408 \text{ watts.}$$
$$\text{input} = 1.5\text{kW.}$$
$$\text{Efficiency} = \frac{408}{500} = 27 \text{ per cent.}$$

The possible depth of modulation is 74 per cent.

If therefore we could reduce the plate impedance of the MT7B to half its present value we could obtain this result with three valves only.

From this calculation it is clear that there is not much gain in efficiency, in reducing R_o from $\frac{1}{5}$ R_e to $\frac{1}{10}$ R_e.

No doubt other examples that can be elucidated by the methods outlined will occur to the reader. It will be seen that the advantages of the plate current—plate voltage characteristics arise from the fact that all the electrical quantities (such as voltage, current and power) of the plate circuit are directly represented.

Thus referring back to Fig. 3*b* we have :—

1. H.T. battery voltage $= E_o = OA$.

2. Working line for external resistance $R_e = AB$ where $\dfrac{OA}{OB} = R_e$.

3. Mean value of plate current $= I_p = CD$.

4. Resistance drop in external load $= R_e\, I_p = AC$.

5. Mean anode voltage $= E_p$
$$= E_o - R_e\, I_p = OC.$$

6. Watts lost in valve with no alternating voltage on grid $= E_p\, I_p =$ area of rectangle $OC \,.\, CD$.

7. D.C. watts lost in external load $= R_e\, I_p =$ area of rectangle $CA \,.\, CD$.

8. Amplitude of alternating component of anode voltage $= e_p = HF$.

9. Amplitude of alternating component of anode current $= i_p = DH$.

Digitized by Google

10. $-e_p$ and i_p are also the amplitudes of the alternating components of voltage and current in the external load R_e.

11. A.C. power in external load $= \frac{1}{2} e_p i_p$ = area of triangle DHF.

My best thanks are due to Mr. H. J. Round for introducing me to the above methods of handling valve problems, and for his helpful interest in the work.

Although the $I_p - E_p$ characteristics can be easily derived from the $I_p - E_g$ characteristics usually provided by the valve manufacturers, it is to be hoped that the latter will see their way to provide the $I_p - E_p$ characteristics either as standard, or as an alternative.

Note.—Derivation of I_p—E_p Characteristics from I_p—E_g Characteristics.

Fig. A shows the I_p—E_g characteristics for the LS5 valve, each individual curve being obtained at the constant plate voltage marked on it. Now take a definite grid voltage ($E_g = O$) for example represented by O on Fig. A. A vertical line OY through O cuts the family of curves in P, Q, R, S and T. These points give the relation between plate current and plate voltage at the particular constant grid voltage chosen (*i.e.*, $E_g = O$). We can tabulate these as shown in the first two columns of the table at the end.

In Fig. B we have taken plate voltage (E_p) and plate current (I_p) as axes and plotted the curve marked ($E_g = 0$) from the figures given in the first

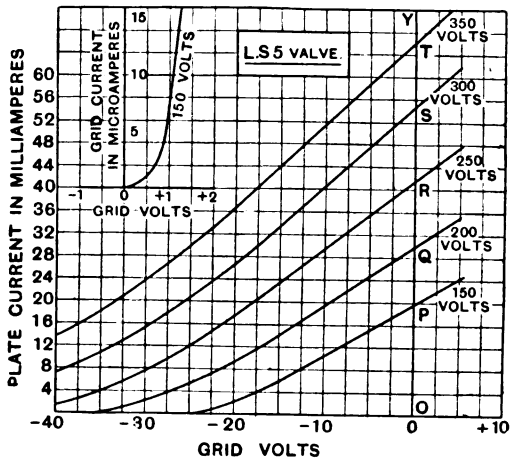

Fig. A.

two columns of the table. P', Q', R', S', T' correspond to P, Q, R, S, T of Fig. A. By taking a series of values of E_g (—10, —20, etc.) and going through a similar process we obtain the complete table and from these we can plot the family of E_p—I_p curves (shown in Fig. B) which we require. The full line curves are those representing definite points given in the table. The dotted lines represent extensions deduced from the others by similarity.

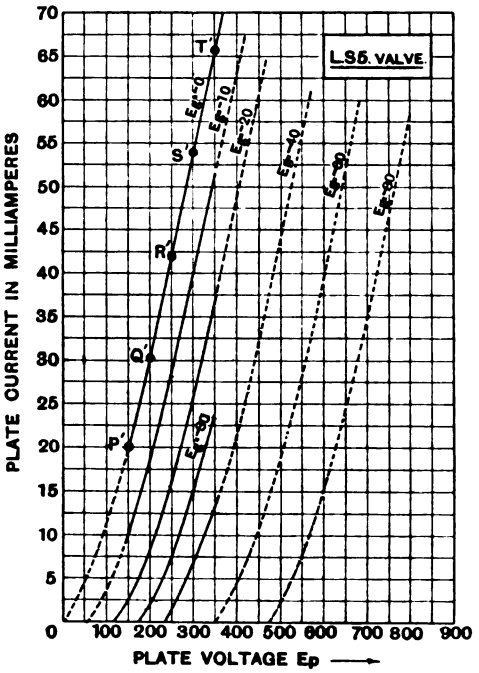

Fig. B.

Thus from the curves for $E_g = 0$ and $E_g = -20$ we see that a change of —20 volts on the grid requires an increase of 120 volts on the plate, to keep the plate current constant.

$\therefore$ Amplification factor $= 120/20 = 6$.

The curve for $E_g = -60$ volts is obtained by displacing the curve for $E_g = -40$ bodily 120 volts to the right, and so on.

Plate Voltage.	Plate current I_p in mA for the constant grid voltage shown.			
E_p	$E_g = 0$.	$E_g = -10$.	$E_g = -20$.	$E_g = -30$.
150	20	10	0	—
200	30.2	18.5	8.4	2.0
250	42.0	29.0	16.6	7.2
300	54.0	40	23.5	15.5
350	66.0	51.5	36.8	24.4

Digitized by Google

DX Work with a Receiving Valve.

By A. D. Gay. **[R545.1**

MOST amateur transmitters will exercise a certain amount of caution in their selection of a transmitting valve, even if only from an economical point of view. For instance, if only a few watts are to be used the purchase of a large valve will not be justified. A valve designed for a large anode dissipation will much more easily lose a few watts than efficiently transfer a small power to the aerial, apart from the higher running cost for filament current. But, on the other hand, a large valve will become very useful when it is convenient to increase power input. When dry batteries are used it is not always desirable nor convenient to increase power unless power mains are going to be utilised at some future date.

When therefore the power is small it will be desirable to use a small valve independently of what will be used for ordinary work. There were a number of small ex-Government valves on the market suitable for low power working. The double plate "B" type, sold at ten shillings each, gave very good results. In size they were no larger than the usual "R" valve, but the plate, after making a complete turn to form the usual cylinder, was bent back the other way. The filaments required about 5.5 volts, but an increase of much above this caused them to give up the ghost!

After having a number of burn-outs in this way it was decided to look for something which might prove to be a cheaper and more durable form of oscillator. Experiments were tried with several types of receiving valves, not without a few mishaps, and at last a valve was found that gave excellent results combined with a long life, namely the Cossor P1. The filament rating of the Cossor valve is normally 3.5-4 volts, but it was found that a few have slightly longer filaments than others, and if one of these can be obtained so much the better. This feature can be detected when testing a few valves together, those with the longer filaments will not appear so bright.

It will be found necessary to run the filaments on about 5.5 volts in the transmitter. This might appear to be rather bright, but it will be found that they will stand up to this voltage quite well, and providing the anode does not become too hot an early burn-out need not be feared. Keying the negative H.T. is to be preferred as this helps to keep the anode cool. In keying any other part of the circuit the milliamps very often tend to rise in the plate circuit, but this method allows the plate current to drop to zero each time the key is lifted.

During the month of February, 1924, using one of these valves, the writer was able to work six French stations: 8DA Marseilles, 8CT Bordeaux, 8SSU and 8OH Rhineland, 8DU Metz, and 8CZ Paris; Flemish P2, Luxembourg 1JW, Dutch 0PB, and Danish 7EC were worked and among a number of British stations are 2AP Aberdeen, 5MO Newcastle, 5SI Shrewsbury, 5OL Liverpool, and 5KO Bristol. Several Scottish stations sent report cards.

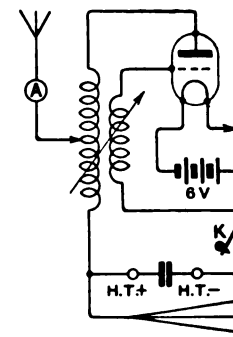

Fig. 1.

It was very interesting to note from reports received how reception varies in different parts of the country. In nine cases out of ten, signals reported heard in the Midlands are only about half as strong as they are in Scotland, but this may be due to a greater veracity on the part of the Midlanders! It would be very useful if some enterprising firm would bring out a map with these bad spots marked in different coloured inks. These spots are usually caused by local geological conditions, metallic deposits, etc.

With reference to the sending of cards, and reports of reception to transmitting stations, this proceeding is exceedingly useful to all DX workers and is to be encouraged by all. The collection of Official Station Cards seems to be the outgrowth of the schoolday habit of collecting anything,

Digitized by Google

but, after all, they do look nice on the wall in all their varied hues. There are still a number of experimenters who do not trouble about cards, either sending or acknowledging, but these are neither DX workers nor morse senders, and usually cannot send their own call-signs properly.

The best piece of DX work done whilst using a receiving valve for transmitting was to Gibraltar, a distance of about 1,000 miles. The power input was 4.4 watts and strength of reception was R8. This must be nearly a record for this class of work at the time.

The transmitting circuit is shown in Fig. 1.

Makeshifts.

Making a Measurement in an unusual manner to use existing Instruments.

By G. H. Watson. **[R230**

THE following notes are penned in the hope of prompting others to seek alternative methods of measurement when ordinary instruments are not immediately obtainable.

It was desired to measure the inductance of an iron-cored coil wound with fine wire, but no A.C. milliammeter was available, the smallest one reading 0—2 amps, calibrated in ¼ amps, so the following circuit was fitted up.

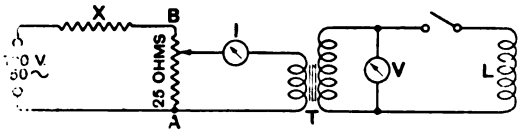

Fig. 1.

The inductance was designed to carry 10 milliamps so the voltage across it would be

$$V = I \times \text{Impedance.}$$

$$= \frac{10}{1{,}000} \times Z$$

The voltage was measured by an electrostatic voltmeter to prevent the instrument causing a load on the transformer. The current being measured in the primary circuit is 85 times larger than the secondary current. The operation was as follows :—

Commence with potentiometer slider at A and increase towards B, adjusting also resistance X until current in ammeter reads 85×10 milliamps $= 0.85$ amp (it was actually made to read 0.75).

The secondary voltage is now read (it was 140V)

$$V = I \times Z$$

so $$V = \frac{\text{Primary } I}{T \text{ Ratio}} \times Z$$

and $$Z = \frac{V \times T \text{ Ratio}}{\text{Primary } I} = \frac{140 \times 85}{.75}$$

$$= 16{,}000\ \omega \text{ nearly,}$$

$$Z = \sqrt{R^2 + P^2}$$

so $$P = \sqrt{Z^2 - R^2}$$

The resistance was 5,000 ohms

so $$P = \sqrt{16{,}000^2 - 5{,}000^2}$$

$$= 15{,}000\ \omega \text{ approx.}$$

$$\therefore \quad P = \omega L$$

so $L = P/\omega$, where $\omega = 2\pi f$

f was 50

so $$L = \frac{15{,}000}{314} = 50 \text{ henries nearly.}$$

When the inductance was switched off, the primary current fell to a very low value—not measurable—and the secondary volts went up to 170. The drop of 30 volts on load, *i.e.*, 170—140, was accounted for by the transformer secondary resistance of 3,000 ohms.

$$V \text{ drop} = I \times \text{Internal resistance}$$

$$= \frac{10}{1{,}000} \times 3{,}000 = 30 \text{ volts approx.}$$

From receiving the request to returning the inductance only two hours elapsed, so it was much quicker than sending to the manufacturers for an A.C. milliammeter.

Digitized by Google

A Short Wave Wavemeter.

By A. E. Tubbs. [R384

FIRST of all it should be said that the heterodyne wavemeter herein described uses no so-called "new circuit," but is simply our old friend the Colpitt's oscillator.

The main advantages of this type of wavemeter are that it will oscillate on any wavelength from five metres upwards, by merely changing one coil, and that the rotor of the tuning condenser is at ground potential. The one constructed by the author covers a wavelength range from fifteen to eighty metres.

Because of the high frequencies covered it is, of course, necessary to have the inductance coils inside the shielded case if any degree of accuracy is desired. This is very simply accomplished by the use of low capacity switches which add additional loading coils to the circuit. Of course, it is necessary to have some inductance outside the shielding in order to couple the wavemeter to other circuits. This is best accomplished by the use of a one turn "pick-up" coil. This "pick-up" coil should not be too large, and should, above all, have a rigid construction. The one used by the author is about four inches in diameter and is constructed from $\frac{1}{16}$ by $\frac{1}{4}$ inch brass strip. For use on the very short waves it is not advisable to make this coil rotatable, because the frequency will be altered by different positions of the coil.

It is not thought advisable to go into actual constructional details in this article because most amateurs have some of the equipment which they will want to use in constructing such a wavemeter, and therefore, it seems advisable to give just a general description and let each amateur work out his own design to suit his particular requirements.

The main piece of apparatus necessary is the double variable condenser, in Fig. 1.

This is a condenser having two sets of movable plates connected to the same shaft and two sets of fixed plates insulated from each other. Such condensers can easily be obtained on the open market, where they are sold mainly for the purpose of simultaneously tuning two stages of radio frequency amplification. If the wavemeter is designed to cover the short waves it will be *absolutely necessary* to have some sort of a high ratio vernier control. The author uses an "Accuratune" dial, having a ratio of eighty to one. And in the neighbourhood of fifteen and twenty metres a higher ratio would be desirable if obtainable. It should be unnecessary to say that the condenser should be one of the best obtainable, both from an electrical and from a mechanical point of view. If possible it should have brass plates, which should be soldered, and

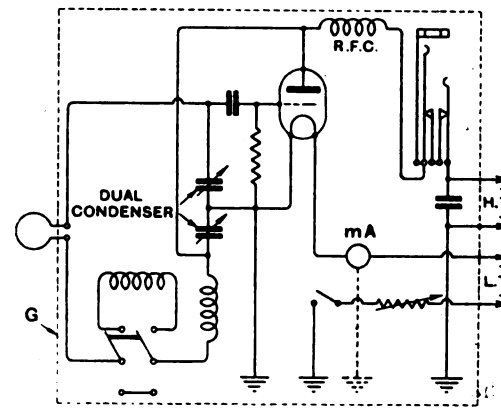

Fig. 1.

above all it should have *good* bearings so that it will hold its calibration. The dial must be fixed firmly to the condenser shaft. This is best done by drilling a hole in the condenser shaft to take the dial set-screw.

It is advisable to have a good strong box for the meter, which must be thoroughly shielded, and for the short waves this shielding *must* be rigid. The author's method was to cut pieces of heavy sheet brass to fit the four sides and bottom of the box and then, after these were tacked firmly in place, the seams were soldered. The panel will also have to be shielded. If it is possible

Digitized by Google

to obtain ebonite which has the shielding already affixed to it, this will, of course, be the best. If not, a piece of sheet brass will have to be cut to fit the panel and after the instruments have been mounted, machine screws can be used to fasten the shielding at any place where it is not held firmly to the panel.

The author mounted everything on the panel so that it may easily be removed from the case. Fig. 2 shows the method of mounting the panel. A strip of angle brass is placed around the entire top of the box. This strip of angle brass serves the double purpose of holding the upper edges of the shielding in place and as a rest for the panel. The upper or horizontal flange of this angle brass has holes drilled in it and tapped to take machine screws which hold the panel in place.

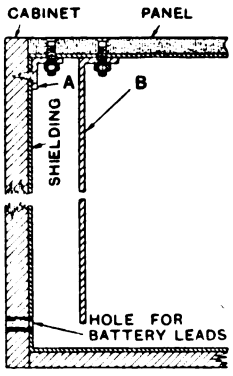

Fig. 2.

The battery leads were brought out through a hole at the bottom of the box, and in order to keep them rigid inside the box the heavy piece of brass strip *B* (Fig. 2) was fastened to the panel and the three battery leads were cabled and brought down this strip where they were rigidly fastened at its lower end. The negative H.T. lead, which is earthed to the shielding, was soldered to the lower end of this heavy brass strip.

A terminal was connected to the shielding (*G*. Fig. 1) and should be connected to a *good* earth when the instrument is being calibrated and, if possible, whenever it is used. This earth is for the purpose of reducing the effects of "hand capacity," etc. It should be borne in mind that a water pipe, or a radiator, on the third floor, is *not* a good earth and is worthless for this purpose.

The author used one of the Western Electric peanut valves because of their small size and because they remain very constant in frequency over their whole life. The meter *mA* (Fig. 1) was a 300 milliampere meter. A meter of some sort is absolutely necessary if any degree of accuracy is desired, because the frequency is naturally dependent, to some extent, on the filament temperature. If the windings of this meter are not earthed to the meter case the latter should be earthed to the wavemeter shielding. For the W.E. valve a 0.0001μF grid condenser and a 2 megohm grid-leak was used. The L.T. battery was one standard dry cell. The large dry cell was used instead of a small one because it was desired to use the wavemeter as a separate heterodyne at times. The H.T. battery was a 22.5 volt block and the condenser across this battery should be 0.25μF or larger. The telephone jack is very useful and it is advisable to include it in the wavemeter, although it should be unnecessary to say that no telephones should be plugged in when the meter is calibrated or when it is being used for accurate recalibration work, because, although theoretically the choke coil *R.F.C.* (Fig. 1) should prevent the telephones from having any effect on the frequency, practically this is not the case on high frequencies. But this jack will be found very useful for adding additional high tension when it is desired to find harmonics, although, of course, after the harmonic is once found, the additional battery should be removed because any wide variation in the H.T. will affect the frequency slightly. Also when it is desired to use the meter as a drive on long waves, a pair of telephones should be plugged in to act as an additional choke and a honeycomb coil of the proper size substituted for the pick-up coil.

The calibration of such a wavemeter on the short waves is what is most likely to bother the average experimenter, so the method used by the author will be described. First it was decided to calibrate it to one-tenth of a metre. Also the dial readings were laid off to a tenth of a degree. (These were just read by judgment because it was thought that they could be judged more accurately than it was possible to make a vernier reading against the main dial). Then on a short wave receiver having a range from fifteen metres to over a hundred metres NKF was picked up on his 71.5 metre wave. He can be found any morning (except Monday morning) about 01.30 G.M.T. transmitting to U.S. Shipboard, London.

Digitized by Google

His frequency is crystal controlled so he can be depended on for calibration. After he is located on the receiver the wavemeter is adjusted until the fundamental of the wavemeter produces a "zero-beat" with *his* wave (the receiver had better be in a non-oscillating condition for this). Next bring the wavemeter up near the receiver and disconnect the receiver from the aerial. The earth should be left on the receiver to stabilise it. Now go down in wavelength on the receiver until the second harmonic of the wavemeter is heard and obtain a "zero beat" between the receiver and the wavemeter's second harmonic. The receiver will now be tuned to 35.75 metres. The wavemeter should now be adjusted so that its fundamental beats with the fundamental of the receiver, in other words the wavemeter should be adjusted to 35.75 metres. In order to obtain this adjustment accurately it will most likely be found necessary to separate the wavemeter and the receiver farther from each other. In doing this, great care should be taken that the frequency being generated by the receiver is not altered in any way. After this point is marked on the curve the receiver should be reset to its original wave of 71.5 metres. This adjustment should be done by listening in the receiver until the double wave of the wavemeter is heard and *not* by attempting to reset the receiver to its original dial settings. Now with the receiver back to its original wave go down with the wavemeter until the third harmonic or 23.83 metres is found. The receiver is now brought down to 23.83 metres, always remembering to use the "zero beat" method. Next go up with the wavemeter until the second harmonic of the wavemeter is heard (the double wave of the receiver or 47.66 metres). Now run down with the receiver until the third harmonic of the wavemeter is found (15.88 metres). The wavemeter is now brought down to 15.88 metres and the receiver shifted up to the quadruple wave or 63.52 metres. This same procedure is continued until the desired number of points are located on the curve.

The points should be marked on the curve as each one is located, because it will then be possible to see if a mistake in locating the correct harmonic has been made. If a harmonic is missed, and a wrong one taken, it will, of course, make a bad hump in the curve. If a mistake in harmonics is made the wavemeter should *not* be placed back to the last correct setting by taking the reading from the curve, but the harmonics should be traced back by the zero beat method until the wavemeter is once more back to the last correct setting.

The curve can afterwards be checked from other stations of known wavelength. The American R.C.A. short wave stations are very handy for this purpose because they keep very close to their assigned frequency. The main R.C.A. short wave stations are WIR 74.03 metres, and WIZ 43.03 metres.

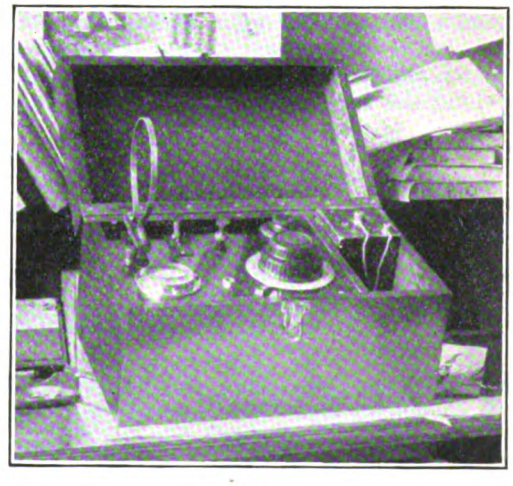

Fig. 3.

Of course, for short waves the oscillator coils should be of a low loss construction, but the constructor must remember that in an instrument of this type a rigid, solid coil is more important than one of low loss construction. For the band in the neighbourhood of fifteen or twenty metres do not use two or three turns of large diameter but rather more turns of small diameter. A good rule is to have the coil diameter approximately the same as the coil length.

An improvement that might be suggested would be the use of a large non-inductive resistance* of five or ten thousand ohms instead of the choke coil. This would

* [Troubles due to capacity in this resistance and fittings are likely to nullify the specified advantages of this method.—Ed.]

Digitized by Google

have the advantage of being constant over the whole wave band and also naturally has a more rigid construction. It should also make the circuit less sensitive to H.T. changes.

Fig. 3 is a photograph of the completed wavemeter. As can be seen from the photograph it is self-contained in a stout oak box, having two compartments; one for the wavemeter itself and the other for the batteries, pick-up loop, etc.

The pick-up loop, seen in the upper left hand corner, is detachable so that the cover may be closed. It has two small plugs which fit into two jacks, which are *well separated* on the panel.

To the right of the pick-up coil is seen the switch which is used for adding the extra inductance coil. Next comes the filament switch and to the extreme right of the panel, behind the tuning dial, is the filament rheostat. In the lower left hand corner is the filament milliammeter and just above it to the extreme left is the earth terminal. Next to the right of the milliammeter is the telephone jack. In the lower right hand corner is the "Accuratune" dial which controls the tuning condenser.

It will be noticed that the pick-up coil has been so placed that there will be a minimum of "hand-capacity" effect while tuning. Also notice that the marker, which the dial reads against, is placed on the lower left hand edge of the dial. This marker must have a rigid construction. The one shown in the photograph is a block of ebonite, tapered so as to go under the edge of the dial. This block is firmly held on the panel by *two* machine screws. A fine line was made on the bevelled surface which goes under the dial, and this line filled with a white substance.

The International Morse Code.

THE wide range and cosmopolitan nature of amateur transmission has brought into prominence the necessity for extending the International Morse Code to include the various accented letters peculiar to different languages. We understand that radio societies in several countries are endeavouring to draw up code signs to be used in national communications in their respective languages, and it is probable that these, when agreed, will eventually be used in international communication.

In the Czeck language there are the following accented letters :—

ž, č, š, ř, ě, á, ý, í, é, ú, ů, ť, ď,

for which, at present, the ordinary alphabetical signs are used, but the Czechoslovakian *Radio Revue* is strongly advocating the allotment of special signs to these letters.

We understand that in Russia the following signs are in use :—

ž - - - — (=v) č — — — - (=ö) š — — — — (=ch)
šč — — - — (=q) ja - — - — (=ä) Ju - - — — (=ü)
e - - — - - - (=é) v - — — (=w) ch - - - - (= h)

The Swedish language has the following accented letters with their corresponding morse signs :—

ö — — — - (as in German, pronounced as "i" in "bird").

ä - — - — (as in German, pronounced as "ai" in "fair").

å - — — - — (pronounced as "o" in "go").

These last are, of course, commonly used in Continental morse as are also—

ch = — — — — é = - - — - - ü - - — —

Digitized by Google

Effective Resistance of Inductance Coils at Radio Frequency.—Part IV.

By S. Butterworth [R144

(*Admiralty Research Laboratory, Teddington.*)

22. Number of Turns in Coil.

A complete consideration of the factors governing design should also include the question of the relative number of turns in various shapes of coils, as it is clear that a coil of few turns is more quickly wound than one of a large number of turns. A glance at Table VIII. shows that L_0 diminishes both with increase of winding length and of winding depth.

Since $L = L_0 N^2 D$, the turns must therefore increase to hold the inductance constant as either b or t increases.

This is true if the diameter of the coil is held constant. For coils of equal surface areas the diameter diminishes as the winding length increases and this diminution must be further compensated for by added turns. These considerations give a further bias in favour of short shallow coils.

23. Determination of the Best Wire Diameter.

Whatever the basis of design we must make the wire diameter such that $R_s = MR_h$ where $M = 1, 2, 3.5$, or 3.67 under the various alternative conditions considered above.

If in all cases we make $R_s = R_h$, which is the correct relation for minimum resistance in a given space at high frequencies, then at low frequencies the resulting resistance is 1.06 times the least resistance possible in the available space, and 1.18 times the least resistance possible with the weight of copper employed. Thus if we use the condition of equal copper losses to determine the best diameter of the wire, we shall never be very far from the most efficient condition for the shape of coil employed. It is, however, to be understood that it may be profitable to use wire of a diameter slightly less than that estimated by the following method, particularly in the case of coils of large inductance working at long wavelengths.

Equating the values of R_s and R_h as given by equation (35) our equation to determine the wire diameter is

$$1+F = \tfrac{1}{4}(KNd/D)^2G = \tfrac{1}{4}(K^2/L_0)(L/D^3)d^2G$$
$$= \frac{S^2L}{D^3}d^2G = P^2d^2G \qquad (47)$$

in which we have written S^2 for the shape factor $\frac{1}{4}K^2/L_0$ and then put

$$P^2 = \frac{LS^2}{D^3} \qquad (48)$$

Remembering that F and G are functions of $df^{\frac{1}{2}}$, that is, of $(Pd)(f/P^2)^{\frac{1}{2}}$, equation (47) may be regarded as an equation connecting the two variables Pd and f/P^2, so that, if a single curve be drawn with f/P^2 as abscissæ and Pd as ordinates, this curve may be used to determine d, the only calculation necessary being that for P from equation (48).

The curve connecting Pd with f/P^2 is given in Fig. 7, together with a table of values of the shape factor S for multilayer coils. For single-layer coils the following values hold for S:—

SINGLE-LAYER SOLENOIDS.

b/D	0.125	0.250	0.375	0.500
S	1.30	0.76	0.57	0.48

SINGLE-LAYER DISC COILS.

t/D ..	0.1	0.2	0.3	0.4	0.5
S ..	1.67	1.12	1.02	1.06	1.16

Digitized by Google

In order to obtain a long range for the abscissæ the horizontal scale has been made logarithmic and the curve divided into two sections (A) and (B). The section (A) holds from $f/P^2 = 10^4$ to 10^6 and the section (B) from $f/P^2 = 10^6$ to 10^8. When $f/P^2 = 10^8$ it is seen that Pd has nearly settled down to the constant value 0.165, so that this relation may be used to find d for values of f/P^2 greater than 10^8.

coil was to take a series of values of $df^{\frac{1}{2}}$ (thus fixing F and G) and then to find the corresponding values of d from (47). The value of f follows since $df^{\frac{1}{2}}$ is known.

24. Application to 2,000μH Coil.

In order to show the application of the theory in a practical case, we will consider the case of a coil intended to be used at a wavelength of 1,600 metres, as this is a

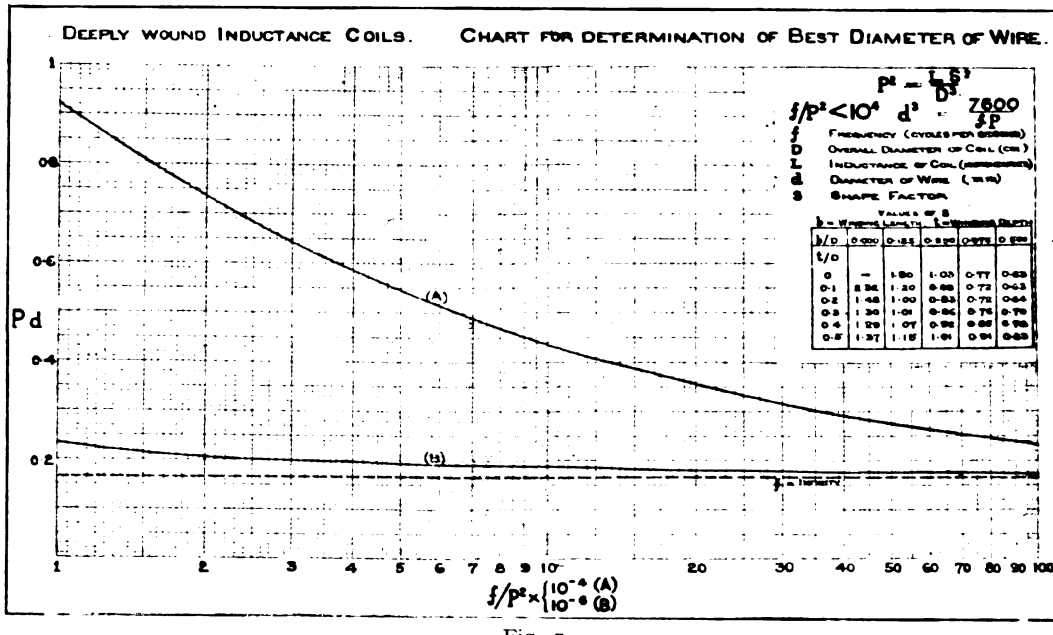

Fig. 7.

When f/P^2 is less than 10^4 the value of d is got from the formula

$$d^3_{mm} = \frac{7{,}600}{fP} \quad .. \quad .. \quad (49)$$

It will be noticed that the values of S in the Table are not equal to $K/2L_0^{\frac{1}{2}}$ but merely proportional thereto. This does not affect the accuracy of the curve provided that the constant of proportionality be included in (47) in calculating the curve. The reason for the change was to make S equal to unity for a shape which was considered to possess general efficiency, viz: $b/D = 0.125$, $t/D = 0.2$. In fact, the curve was calculated so as to give a direct relation between f and d for a coil of this shape for which $L = 1{,}000\mu$H and $D = 10$ cms. The mode of calculating the points for the curve for this

wavelength for which most coils on the market are at present wound with the wrong diameter of wire. We will choose for the inductance of the coil 2,000μH, as at the above wavelength the resonating capacity has the convenient value of 360μμF. A convenient size and efficient shape (see Tables IX. and X.) is

$$D = 4 \text{ in.} = 10 \text{ cm.}, \quad b = 1.25 \text{ cm.},$$
$$t = 2.0 \text{ cm.}$$

For this shape by Table VIII. $L_0 = 9.10$, so that the number of turns required is

$$\sqrt{\frac{2{,}000 \times 1{,}000}{9.10 \times 10}} = 149$$

by equation (36). We now determine the correct gauge of wire by means of Fig. 7.

From the Table accompanying the Fig.

Digitized by Google

$S = 1$, and therefore by equation (48)

$$P^2 = \frac{2{,}000 \times 1^2}{10^3} = 2 \text{ and } P = 1.414.$$

For a wavelength of 1,600 metres the frequency is 188,000 so that $f/P^2 = 9.4 \times 10^4$. Therefore, using curve (*A*), $Pd = 0.445$ and this gives $d = 0.314$ mm. The nearest gauge to this is No. 30 S.W.G. Remembering that this is the gauge which will make $R_h = R_s$ and that the best condition should be such that R_h is somewhat less than R_s as the frequency cannot be regarded as "high" in association with this diameter, it will probably be profitable to use No. 32 gauge.

To verify the design and to determine the expected copper resistance the following table of values of the copper resistances of the coil, using various wire gauges, has been calculated by means of the resistance equation (35).

Wire gauge.	D.C. resistance (ohms).	A.C. resistances.		Ohms. $R_c = R_s + R_h$.
		R_s.	R_h.	
36	21.7	21.7	1.2	22.9
34	14.8	14.9	2.5	17.4
32	10.8	10.9	4.7	15.6
30	8.2	8.3	8.1	16.4
28	5.7	6.0	13.7	19.7
26	3.9	4.3	24.0	28.3
24	2.6	3.1	37.6	40.7

The Table thus verifies the design in that No. 32 wire is showing the lowest resistance. The gauges have been carried to No. 24, as many commercial coils employ gauges up to this value. When it is pointed out that the winding section can accommodate the required turns with No. 18 wire it will be seen that even with the thickest tabulated wire there is ample spacing but not enough to reduce the copper losses to their minimum value. The advocates of very thin wire are justified by the results of the Table, as No. 36 wire gives better results than the gauges usually employed.

To return to the design, all we now require is the mode of distributing the turns throughout the winding section. This distribution will hardly affect the copper losses, but will have a considerable effect upon the self-capacity and therefore on the dielectric losses (such as they are).

The principle is simple. Double spacing requires considerable care and an elaborate framework, while the gains are doubtful. With single spacing (that is spacing between the layers but none between the turns in one layer) the smallest self-capacity will be obtained if the layers are short and many. Thus with a coil of the present shape the layers must be parallel to the winding length and spaced throughout the winding depth. Allowing for insulation we should be able to obtain 30 turns in a winding length of 1.25 cm. and thus we should need five layers spaced at distances of 4 mm.

The former should have an inner diameter of about 6.4 cm., giving for the diameter of the outer layer 9.6 cm. The effective diameter is then 10 cm. as we must add the layer spacing to the outer layer diameter to obtain the effective outer diameter.

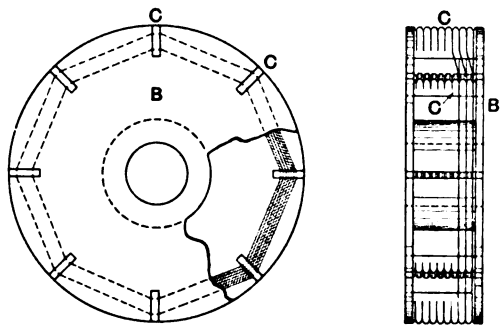

Fig. 8.

If we had chosen a shape in which the winding depth was less than the winding length, the type of winding to employ would be a "banked" winding with spacing between the banks. If suitable insulating combs are employed to support the banks a coil of this type may be wound very rapidly and thus has an advantage over a coil of the above type when very close coupling between other coils is not contemplated. The procedure of design for this type of coil is exactly as in the above case, the number of banks and of turns per bank being decided upon after the correct diameter of wire has been found.

An efficient coil of the "banked" type is shown in Fig. 8. The combs *c*, *c* . . . holding the windings are of ebonite $1\frac{1}{4}$ in. $\times \frac{1}{2}$ in. $\times \frac{1}{8}$ in. and have nine slots $\frac{3}{8}$ in. deep and $\frac{1}{8}$ in.

Digitized by Google

apart, the slot width being such as to give an easy fit to No. 30 D.S.C. wire. A V-shaped opening is filed into each slot mouth so that the wire will slip readily into its proper slot when winding. The combs are supported as shown round the circumference of a mahogany bobbin of external diameter $4\frac{3}{4}$ in., the width of the cheeks being $\frac{1}{8}$ in. and their internal separation 1 in. If the coil is intended for use at 1,600 metres the wire to use is No. 30 D.S.C. and the coil is wound bank by bank, allocating 15 turns to each bank so that the total turns in the coil is 135. Three of these banks are shown wound in the end elevation.

A coil wound by the writer to the above specification gave the following effective dimensions :—

$$D=11.0 \text{ cm.}, \quad b=2.7 \text{ cm.}, \quad t=0.65 \text{ cm.}$$

As regards D it will be noticed that the coil is octagonal, and therefore the value given for the external diameter has been taken as the mean between the diameters of the inscribed and circumscribed circles of the external octagon. The theoretical calculations assume this diameter for the equivalent circular coil.

It was found that the measured and calculated inductance were both equal to 2,420μH, the measurement being made

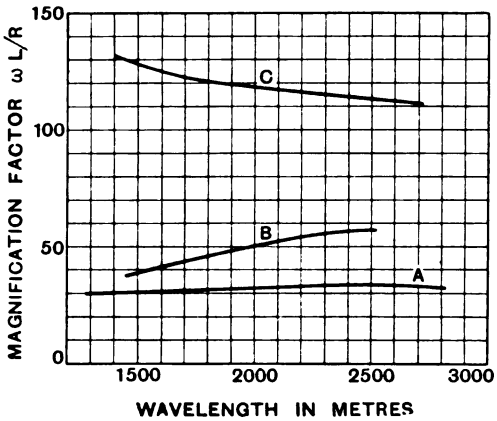

Fig. 9.

on an inductance-capacity bridge at a frequency of 1,000 cycles per second An inductance measurement made at radio frequency by the calibration department of *E.W. & W.E.* gave a value of 2,445μH and a self-capacity of 1.5$\mu\mu$F.

As regards the high frequency resistance the writer obtained the following results using the resistance variation method and a thermo galvanometer of resistance 5.1 ohms as detector. The tabulated measured values include all losses in the circuit apart from the copper losses in the leads and the D.C. losses in the detector.

The calculated resistances have been obtained from equation (35), using the measured value of the D.C. resistance, viz. : 10 ohms.

Wavelength (metres)	Obsd. A.C. Res. (ohms.)	Calcd. A.C. Res. (ohms.)
2,270	15	12
2,500	16	14
2,070	18	16
1,850	21	18
1,580	23	20
1,470	24	21

Two measurements of H.F. resistance were also made by the calibration department of *E.W. & W.E.*, in which the losses in the rest of the circuit were carefully estimated. They found at

1,605 metres A.C. resistance = 20 ohms.
2,090 ,, ,, ,, = 15 ,,

These are in practical agreement with the calculated copper resistance and thus indicate that the copper losses are the sole measurable losses in the coil.

In order to see what gains have been effected by scientific design two popular commercial coils having an approximate inductance of 2,000μH were also measured. The results are exhibited in the curves of Fig. 9. In this fig. the curves of $\omega L/R$ are plotted against wavelength for each coil. It is readily shown that if an E.M.F. e be impressed on a resonant circuit containing the coil and a condenser free from loss the P.D. developed across the condenser terminals is given by $\omega Le/R$, so that the factor $\omega L/R$ tells us what magnification of the applied E.M.F. may be obtained under ideal conditions when using the coil under test. This factor is probably thus the best factor to use for the comparison of coils of slightly different inductances.

Digitized by Google

The two commercial coils give the curves marked *A* and *B* and the above "banked winding" coil gives the curve *C*. The data for the coils *A* and *B* are as follow :—

	Coil *A*	Coil *B*
Wire gauge	24	26
External diam.	8.3	6.6 cm.
Coil length	1.5	2.6 cm.
Self-capacity	5	21$\mu\mu$F.
Inductance	2,300	2,180μH.

The curves show that at 1,600 metres the magnification factors for the coils *A*, *B* and *C* are 31, 42 and 125 respectively. It is true that in constructing what we consider to be the best solid wire coil for reception at this wavelength we have allowed ourselves rather more space than is usually assigned to these coils, but the difference is not so much due to this as to a correct choice of wire diameter. For coils of the size of *A* and *B* it is not unreasonable to expect a magnification factor of 100 without having recourse to stranded wire, provided that the correct diameter of wire is employed and the coils are wound in such a manner as to give the minimum self-capacity.

25. Stranded Wire Coils.

We are now to investigate what advantage may be gained by winding coils with stranded instead of solid wire. The type of stranded wire studied is that known as "litzendraht" in which each strand is separately insulated either by enamel or a single silk covering and the strands braided together in such a manner that throughout the length of the multiple conductor an individual strand occupies in turn all possible positions in the winding section. The object of this braiding is to ensure that each strand of the parallel system is subject to the same induced E.M.F. when alternating current flows along the conductor. Otherwise the outer strands would shield the inner strands and the current at high frequencies would only be carried by the outer strands. The necessary intermingling of the strands is usually brought about by constructing the cable on the "three" system, in which three strands are first twisted together to form a single cable and then three 3-stranded cables are twisted to form a 9-stranded cable and so forth so that we may use cables having 3, 9, 27, . . . 3^r strands. The wire gauges used in constructing stranded cable usually vary from No. 36 to No. 44.

It will be seen from the mode of construction that the D.C. resistance of a stranded cable having *n* strands is somewhat greater than the resistance of an equivalent length of solid conductor having the same copper section, as each strand makes a helical path and has thus a length greater than the length of the cable. This fact should be remembered when we are comparing theoretical and observed resistances.

There appears to be considerable diversity of opinion as to the relative merits of stranded and solid conductor for use in A.C. work. Some experimenters have even come to the conclusion that stranded wire coils have higher resistances than *corresponding* solid wire coils. The italics are introduced as the whole controversy on this point revolves round the fair method of comparison. The experimental comparison usually made is between coils having some simple common property in addition to equality between inductances. The favourite mode of comparison is to make the D.C. resistances equal and then to compare the A.C. resistances of the pair over a range of frequencies. When this mode of comparison is adopted it is found that the stranded wire coil has the initial advantage, the resistance of both coils increasing as the square of the frequency but the rate of increase of resistance of the solid wire coil being greater. At higher frequencies the solid wire coil falls away from the square law before the stranded wire coil, so that the two resistance curves tend to approach. At a certain frequency the curves cross and the solid wire coil then becomes better than the stranded wire coil. The experimenter then says that it is better to use solid wire above the frequency of cross over. The critical frequency he recommends depends upon the type of coil he happens to use for his experiments.

A more scientific mode of comparison was that made by Prof. Howe in a theoretical investigation on stranded conductors (*loc.cit.*[10]) Howe pointed out that for a given overall diameter of stranded cable there was an optimum number of strands of given diameter which would give a minimum A.C. resistance. He estimated the minimum resistance in a number of cases and compared it with the

Digitized by Google

resistance which would be obtained with a solid conductor having the same overall diameter as the stranded wire. The cases he considered were those of straight cable and of long single layer solenoids. He described this as a "safe" mode of comparison, as we should be certain that both types of conductor would fit into the available space. It may be said that the comparisons did not augur well for stranded wire, particularly at the higher frequencies. In criticism of the method it may be pointed out that we have already shown that there is a great deal of air space still available in deeply wound inductance coils when the best diameter of solid wire is employed, so that it may (and will) turn out that the best stranded wire coil will have greater overall diameter than the best solid wire diameter and yet the wire may be accommodated. The above comparison in these cases therefore fails.

Prof. Fortescue (*loc. cit.*[11]) made a still better comparison, in that he found the best solid wire diameter and the best number of strands and compared coils under these conditions. The limitations of his theory have already been discussed and it is considered advisable to use the same method of comparison with these limitations removed.

The basis of comparison will therefore be between the best solid wire and best stranded wire coil at a particular frequency. An experimental comparison on this basis for all frequencies is obviously a task of some magnitude, as it would involve winding a great number of coils, particularly if we are ignorant as to the best diameters of wire to employ. It is better to compare the theoretical resistance formulæ with experiment in a few typical cases and, if these comparisons justify the formulæ, deduce the relative merits of the two types of coils from the theoretical formulæ.

The comparison will differ from that of Fortescue in that the best gauge for a given number of strands will be found instead of the best number of strands for a given gauge, as the latter mode of comparison often leads to a number of strands not practically available; whereas if we choose the nearest gauge to that indicated by theory for a known possible number of strands we are never very far from the minimum possible resistance.

25.1. *Resistance of Stranded Wire Coils.*

Let d be the diameter of one strand, n be the number of strands and d_o the overall diameter of the stranded wire. Then it has been shown (*loc. cit.*[12]) that the alternating current resistance of the stranded conductor when straight is given by the formula

$$R_s = R\{1 + F + k(nd/d_o)^2 G\} \quad \ldots \quad (49)$$

in which R is the D.C. resistance of the stranded conductor and F and G have the same significance as before, z being calculated from the diameter of a single strand. As regards k, this depends upon n. For the usual types of stranded wire we have:—

n	=	3	9	27	large
k	=	1.55	1.84	1.92	2

For the case of a coil of stranded wire the resistance due to the remaining turns is calculated as in the case of solid wire coils. Thus, since the D.C. resistance of each strand is nR, and since there are n strands in each turn, we obtain

$$R_h = \tfrac{1}{4} R (KNnd/D)^2 G \quad \ldots \quad (50)$$

Hence for the whole resistance

$$R_c = R_s + R_h =$$
$$R\{1 + F + (k/d_c^2 + \tfrac{1}{4}K^2N^2/D^2)\, n^2 d^2 G\} \quad (51)$$

25.2. *Test of Formula by Comparison with Observation.*

A series of stranded wire coils, forming part of the Standard Multivibrator Wavemeter in use at the National Physical Laboratory, serve admirably to test the adequacy of the formula. The comparison will also clear up certain doubts which have been raised in regard to stranded wire.

The values of the decrements $(R/2fL)$ of these coils have been given by Mr. D. W. Dye (*loc. cit.*[1]) and the coil details are to be found in the "Specification and Notes" supplied by the N.P.L. From these data the following Tables have been prepared.

The calculated A.C. resistances have been corrected for capacity in accordance with the formula already given. The agreement is very satisfactory, and shows that the losses other than copper losses are small even in these very efficient coils. The last column gives the magnification factor $\omega L/R$ and is inserted to show the increase in efficiency to be expected by resorting to stranded wire and having coils of this diameter. It is

Digitized by Google

interesting to notice that the first coil has not symmetrical stranding, but this does not appear to affect seriously the copper losses.

The type of insulation covering the individual strands is given and the Tables clearly show that no disadvantage is to be expected by employing enamelled instead of silk-covered strands.

COIL I.

INDUCTANCE 100,000μH, TURNS 1,024, WIRE 10/36 S.S.C.
D=18.8 cm., b=5.1 cm., t=5.2 cm.

Frequency. Kilocycles Per sec.	Estimated D.C. resistance. Ohms.	Measured A.C. resistance. Ohms.	Calculated A.C. resistance. Ohms.	$\omega L/R$
10	25.3	30	28	210
15		32	31	295
20		36	35	350
25		47	38	330

COIL II.

INDUCTANCE 20,000μH, TURNS 427, WIRE 27/40 S.S.C.
D=19.5 cm., b=3.0 cm., t=5.8 cm.

Frequency. Kilocycles. Per sec.	Estimated D.C. resistance. Ohms.	Measured A.C. resistance. Ohms.	Calculated A.C. resistance. Ohms.	$\omega L/R$
25		10.5	10.4	300
30	9.84	10.8	10.7	350
40		12.2	11.4	410
50		15.0	12.2	420
60		19.7	13.2	380

COIL III.

INDUCTANCE 5,000μH, TURNS 200, WIRE 81/40 ENAMEL.
D=18.0 cm., b=1.6 cm., t=5.0 cm.

Frequency. Kilocycles. Per sec.	Estimated D.C. resistance. Ohms.	Measured A.C. resistance. Ohms.	Calculated A.C. resistance. Ohms.	$\omega L/R$
50	1.47	3.1	2.8	505
60		3.8	3.3	495
80		5.4	4.8	465
100		7.0	6.7	450

COIL IV.

INDUCTANCE 995μH, TURNS 96, WIRE 81/40 ENAMEL.
D=17.5 cm., b=1.5 cm., t=5.8 cm.

Frequency. Kilocycles. Per sec.	Estimated D.C. resistance. Ohms.	Measured A.C. resistance. Ohms.	Calculated A.C. resistance. Ohms.	$\omega L/R$
100	0.63	1.2	1.1	520
150		1.7	1.7	550
200		2.4	2.5	520
250		3.4	3.6	460

COIL V.

INDUCTANCE 202μH, TURNS 36, WIRE 81/40 S.S.C. DOUBLE-LAYER DISC COIL.
D=16.7 cm., t=3.9 cm.

Frequency. Kilocycles. Per sec.	Estimated D.C. resistance. Ohms.	Measured A.C. resistance. Ohms.	Calculated A.C. resistance. Ohms.	$\omega L/R$
250	0.258	0.9	0.7	350
300		1.1	0.9	345
400		1.7	1.4	300
500		2.4	2.0	265
600		3.4	2.9	225

As regards Coil V, Mr. Dye stated that its decrement curve (which is distinctly worse than that for the other coils) was not understood, but the Tables show that it is behaving exactly as expected by theory. As to how it may be improved will be considered when we have dealt with the theory of the design of stranded wire coils.

25.3. *Design of Stranded Wire Coils.*

The procedure of design is exactly analogous to that for solid wire coils, using formula (51) for our resistance equation. The only difficulty is that due to the term involving d_0, the overall diameter of the stranded wire. If we regard the number of strands (n) as fixed and seek the best diameter of an individual strand, then, as d varies, d_0 will also vary, but not so rapidly as d because of the space occupied by the insulation. As a rough approximation, therefore, we take d_0 to be independent of d and to have a value which is correct for the mid gauges of wire usually used in stranded conductors. This makes $d_0^2 \doteqdot 0.07n$ when d_0 is measured in millimetres. This approximation is probably

Digitized by Google

good enough for the purpose, as the term involving d_0 will usually contribute only a small amount to the total resistance. When the approximate gauge has been found using this assumption, formula (51) may then be employed, using the correct values of d_0 to calculate the resistance for a gauge or two on either side in order to discover the true best diameter.

With the assumption $d_0^2=0.07n$, the method of determining the best d is as follows :—

Calculate P from the formula

$$P^2 = \sigma + n^2S^2L/D^3 \quad \ldots \quad (52)$$

in which σ is a function of n having the values

$\sigma =$ ..	0	0.9	3.3	10.4	$0.4n$
for n ..	1	3	9	27	large

The best diameter d of an individual strand is then found from Fig. 7, exactly as in the case of solid wire coils.

It must be remembered that Fig. 7 gives the diameter which will make $R_s=R_h$, and since the wire usually turns out to be thin the correct relation for minimum losses is $R_s=2R_h$. The result is that the wire gauge should be somewhat less than that estimated by the above method. If, as is often the case, we are intending the coil for a range of frequencies it is well to estimate the diameter by the above method for the *highest* frequency, as then the minimum condition will fall well inside the range of working frequency.

25.4. *Example.*

In illustration of the method of design we will take Coil V. of the wavemeter series above. An examination of the Table shows that the measured A.C. resistance is much more than double the D.C. resistance, and as the D.C. resistance is practically also the skin resistance for this gauge, we see that the general field losses are too big, which indicates thinner wire if we keep to 81 strands. This is probably impracticable on account of the difficulties of manipulation. So we will try what may be obtained with 27 strands. From the coil shape we find $S=1.34$. Inserting this and the remaining factors in (52), $P^2=67$, and as we are designing for $f=600{,}000$ $f/P^2<10^4$ and therefore the formula $d^3=7{,}600/fP$ is applicable; this gives $d=0.116$ mm. and No. 40 wire is indicated. The data are now complete for calculating the A.C. resistance by formula (51), which, with $d_0=1.4$ mm., gives $R_c=1.8$ ohms at 600,000 cycles per second. This is an appreciable gain on the value found with 81/40 wire. The resistances at the lower frequencies may readily be found as the square law of frequency holds for this case. It is found that at 250,000 cycles per sec. the A.C. resistance is 1.0 ohm, somewhat higher than that for 81/40 wire, but, taken over the whole range the coil is a better coil in regard to efficiency, and this has been obtained after sacrificing the extremely fine stranding. The example clearly shows how difficult it would be to obtain the best results from stranded wire without having recourse to theory.

25.5. *Stranded and Solid Wire Coils compared.*

The comparison between the two types of coils is most readily effected by making use of formula (52). As a first approximation we will neglect σ. This approximation is suitable particularly for coils of large inductance and for coils in which a high degree of stranding is employed. For coils otherwise equal, P is then proportional to n. Now if the frequency is *low* the best diameter of wire is given by (49), from which we see that d is proportional $1/n$. Further, when the best diameter of wire is used, the A.C. resistance is proportional to the D.C. resistance of the stranded conductor, so that both are proportional to $1/nd^2$ that is to $1/n^{\frac{1}{3}}$. For *low* frequencies, therefore, the best A.C. resistance varies inversely as the cube root of the number of strands. Next suppose the frequency so high that the square root law holds for *all* possible diameters of strand. The law for determining the best diameter is then $Pd=0.165$ and since P is proportional to n, nd is constant. But at these high frequencies the A.C. resistance is inversely proportional to nd. Thus at very high frequencies there is no gain whatever by stranding.

If, now, σ be included, the low frequency gain estimated above will be somewhat reduced and at very high frequencies stranding will actually increase the resistance. In practice, however, this case will rarely arise, and it will be found possible to design small low inductance coils for use at a wavelength of 100 metres which have lower resistance than the best corresponding solid wire coil.

Digitized by Google

The gain, however, will be small. The real objection to stranded wire coils at very high frequencies is not that the resistance cannot be reduced but that the gain is so small that it is not worth the extra expense. In order to obtain some concrete idea as to the relative merits of solid and stranded wire coils we may take the first five coils of the series of coils quoted in Section 15.

The following Table shows the theoretical magnifications for these coils when they are wound with the best solid and 9-stranded wire respectively, the wave lengths being such that each coil is in resonance with a condenser of $500\mu\mu F$.

MAGNIFICATIONS OF SOLID AND STRANDED WIRE COILS.

$D=8.3$ cm., $b=1.5$ cm., $t=3.0$ cm.

f (kc)	930	538	327	256	152
Coil No.	1	2	3	4	5
Inductance (μH) ..	73	183	343	765	2,170
Wavelength (metres)	362	563	786	1170	1,970
Magnification ($\omega L/R$)					
Best solid wire ..	133	122	116	112	108
Best 9-stranded wire	192	198	203	208	224

It may be remarked here that the above shape of coil is not at the peak of efficiency in regard to shape. The coil of Section 24 is better in this respect and, as we have seen, gives a magnification of at least 125 at 1,600 metres. If wound with 9/38 wire (in 13 banks of 10 or 11 turns each) this magnification should be doubled.

It is not therefore unreasonable to expect a magnification of 100 for all solid wire coils and of 200 for all 9-stranded wire coils while still keeping to the usual sizes of receiving coils.

APPENDIX.

Determination of Mean Square Field over Winding Section of Inductance Coils.

(A) *Deeply Wound Coils.*

It is necessary first to find expressions for the axial and radial magnetic field components throughout the section of the coil. These components may be calculated if we know the axial and radial fields at any point on the end face of a "solid" coil, that is, a coil wound full from the centre. The writer was unable to find any published formulæ for these components, but as reliable formulæ exist for the mutual inductance between solid coils (*Phil. Mag.*, 29, p. 578, 1915) the necessary formulæ were derived from these fundamental formulæ, and tables of field values calculated. By using a system of curves drawn with the help of these Tables it is possible to determine the field at any point within the winding section of a coil which is not fully wound, as the process is merely one of addition and subtraction.

For the determination of the mean square field throughout the length of wire it is necessary to find the mean value of H^2r over the winding section, H being the field at radial distance r. Now as regards the mean value of this quantity over any cylinder co-axial with the coil, it is easily deduced by Taylor's Theorem that if b be the winding length of the coil a good approximation to the required mean value is obtained by taking the values at the three points within the winding section situated at $0.056b$, $0.250b$, and $0.444b$ respectively and finding their weighted mean, the respective weights being 5, 8 and 5. The same process may be applied in taking the mean of the means for the various elementary cylinders. The operation for determining the mean square field is thus reduced to the determination of the weighted value of H^2r at nine points in the winding section, whose positions and respective weights are as follow :—

u/b =	0.056	0.250	0.444
v/t	Weights.	Weights.	Weights.
0.112	25	40	25
0.500	40	64	40
0.888	25	40	25

Here u is the axial displacement of the point from the end plane of the coil and v the depth below its outer surface.

The values of K given in the text were found in this manner, but in order to remove any doubt in regard to the accuracy of the above approximation, the values of K were in a few cases also calculated by graphical integration using a much larger number of points. These determinations agreed with the tabulated values.

(B) *Solenoids and Disc Coils.*

From the formulæ given in the text for these cases it is easily shown that for single-layer solenoids $K^2=4uD^2/b^2$ and for single-layer disc coils $K^2=4uD^2/t^2$. As regards the m layered coils we merely replace u by $u+3.29(1-1/m^2)$.

(C) *Coils for which the Winding Section is very small compared with the Coil Diameter.*

In this case the function K becomes very large and it is preferable to write

$$H^2m=UN^2I^2/b^2$$

where b is the winding length and U is a function of t/b calculated by a method similar to that for the deeply-wound coils. When t is less than b, U has the following values :—

t/b =	0.00	0.02	0.04	0.06	0.08	0.10	0.20
U =	26.3	24.7	23.7	22.4	21.2	20.1	16.8
t/b =	0.40	0.50	0.60	0.70	0.80	0.90	1.00
U =	12.4	10.9	9.6	8.5	7.5	6.8	6.1

When t is greater than b it is only necessary to interchange b and t in the formula.

Digitized by Google

The above results are only strictly true for an infinite number of turns. The way in which the values for finite turns approach the tabular values may be illustrated by the case of a square section in which the wires are arranged in square order. For this case we have :—

Turns ..	4	9	16	25	36	64	100	Inf.
U ..	4.5	5.4	5.7	5.8	5.9	6.0	6.0	6.1

We may also use this type of coil to estimate the effect of groupings of the wires which are other than in square order. Thus we may take the case of a coil for which $t/b=0.5$ having 54 turns. Suppose this first wound in 6 short layers each of 9 turns, the distance apart of layers being three times the distance of turns in a layer. We find $U=10.9$ agreeing exactly with the tabular value for infinite turns. If the winding is in three long layers each containing 18 turns, the ratio of layer to turn distance being again 3 to 1, the value of U is 10.6.

These examples appear to indicate that the tabular values for infinite turns are good enough for purposes of design when the number of turns exceeds about 16 and will hold whether the wire is spaced in layers or arranged in square order. The mode of spacing affects the self-capacity rather than the copper losses.

(*The author is indebted to the Admiralty for permission to publish the work relating to multilayer coils*).

A Note on Transmission.

Taking Advantage of the Voltage Node. [R344.3

THE following method of feeding the high tension supply to the anode of the transmitting valve has been adopted at 5RF in order to eliminate the losses in

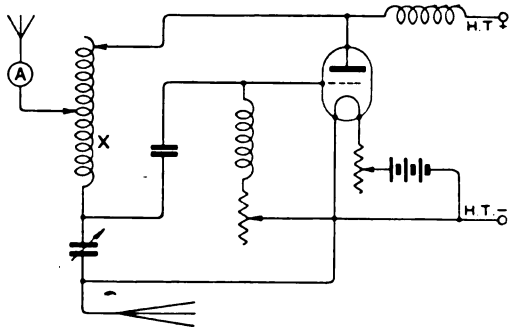

Fig. 1.

the radio-frequency choke employed in the shunt feed circuit. The removal of this choke probably has the effect also of sharpening the tuning—always a desirable feature.

In using the Colpitt's circuit, as shown in Fig. 1, it was found that a voltage node occurred at X and that the H.T. positive lead could be connected to this point on the inductance coil instead of to the anode via the radio-frequency choke.

Since the radio-frequency potential here is zero no current (except the feed current) flows along the wire W (Fig. 2) and therefore no loss of aerial current results; indeed, by this means a greater aerial current is obtained for the same power input.

The procedure for finding the nodal point is to reduce the power to one or two watts and to search along the inductance coil with the H.T. positive lead (no choke being inserted) until a point is found on either side of which the aerial current falls off. This, then, is the node where the H.T. lead is left until a change in wavelength is made. In this case, as the adjustment is critical, it will be found necessary to slide the connecting clip along the turn to which it is connected on the coil to obtain a fine adjustment. A movement of one inch makes a perceptible difference in the value of the aerial current.

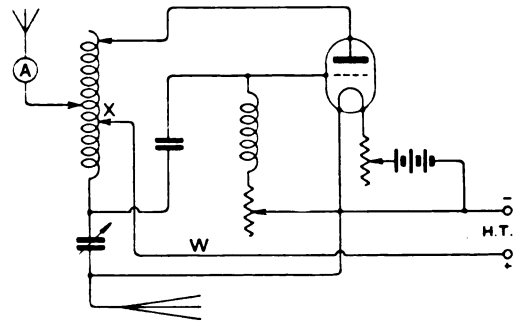

Fig. 2.

No doubt this is not a convenient method to employ where a frequent change of wavelength is necessary but it is a valuable point to consider in striving after efficiency.

L. F. HUNTER.

Digitized by Google

Mathematics for Wireless Amateurs.

By F. M. Colebrook, B.Sc., A.C.G.I., D.I.C. **[510**

(*Continued from page 450 of July issue.*)

(E) **Division.**

FOLLOWING the same method as for the other fundamental operations, we will approach the general or algebraic idea of division through the familiar ground of arithmetic. What do we really mean when we say that 15 divided by 5 is 3? Actually of course it is the mere repetition of a formula by memory, but the real basis of the formula is this: If the group called fifteen is separated out into five equal groups, each of these will be the group that we call three. In other words, the process of dividing 15 by 5 consists of finding that group, five of which combined together will make up the group called 15. Thus there are really three steps in the statement, as the reader will be able to prove to himself if he will think about it carefully enough. The steps are

$$(15 \div 5) \times 5 = 15$$

because that is what division means, followed by

$$3 \times 5 = 15$$

as an act of memory, followed by the deduction

$$(15 \div 5) = 3$$

The important step for our present purpose is the first, because it shows the reader that the formal algebraic definition of division

$$(a \div b) \times b = a$$

is identical in form with that which he already accepts, though perhaps unconsciously, as the definition of division in ordinary arithmetic.

The first thing to notice about the operation of division so defined is that $(a \div b)$ may or may not be a number in the original sense of that word, *i.e.*, a characteristic property of a group of things that can be counted. Thus $(15 \div 5)$ is the number 3, but $(4 \div 5)$ is not a number, because there is no simple group 5 of which combined together will make up the group 4. This fact has occasioned some hard thinking to pure mathematicians who, in a laudable desire to make the basis of their science as simple as possible, take the operation of counting rather than the measurement of magnitude or quantity as their fundamental conception. (They get over their difficulty by adding rational fractions to the class of numbers, an application of what Prof. Whitehead has described as the Humpty-Dumpty Principle.*)

However, as practical mathematicians, we shall be more interested in quantity than in magnitude or number, and in terms of quantity $(4 \div 5)$ is an idea that presents no difficulty whatever. We can take any quantity, such as a journey of four units (*e.g.*, inches) in a given direction and divide it into five equal journeys without turning a hair, let alone splitting one. Then if the number 4 represents the original journey, each of these smaller journeys (call it "a") is such that

$$a + a + a + a + a = 4$$

i.e.

$$a \times 5 = 4$$

so that

$$a = (4 \div 5)$$

in terms of our original definition.

It will be convenient to introduce a few more special terms at this point. If $(a \div b) = c$ where c is a number, then a, b, and c are called respectively dividend, divisor, and quotient. The sign $\div$ is not a very convenient one to use in practice, and $(a \div b)$ is usually written $\frac{a}{b}$ or, to get it on one line a/b. A group a/b which cannot be expressed as a number, and in which a and b contain no common factor greater than 1 is called a fraction, b being the denominator and a the the numerator. In practice these names are often applied to any expression of the form a/b, a useful extension of the meaning of these words,—indeed a necessary one, since until

* Humpty-Dumpty in conversation with Alice, talking about words, "I pay them extra and make them mean what I like."

Digitized by Google

a and b are given specified numerical values one cannot say whether a/b is a number or a fraction.

It is important to realise that as far as the interpretation in terms of quantity is concerned there is no essential difference between a whole number and a fraction. In fact the same quantity can be represented by either. Thus a given weight may be represented by the number 7 or the fraction 7/16 according as to whether it is measured in ounces or pounds. Here the representation in the first place by a number and in the second by a fraction is seen to mean nothing more than a difference in the unit of measurement.

One very important conclusion follows at once from this. The Laws of Commutation and Association and the rules relating to sign in the addition and subtraction of numbers were stated and demonstrated in terms of magnitudes—lines or journeys of various lengths represented by symbols which in their turn represented numbers. It would make no difference to the reasoning employed if the units and lengths had been such as to require the use of the fractional form for the numerical description of the various magnitudes. We can therefore proceed at once to the conclusion that the Laws of Commutation and Association and the rules of sign apply without modification to the addition and subtraction of fractions, and the symbols used in Section 3 as far as paragraph C (2) can be given this additional freedom of interpretation. They may represent positive or negative whole numbers or fractions.

Giving to the word fraction the extended meaning which has been indicated above, the determining of the rules of algebraic division really amounts to finding out how such quantities enter into the operations of addition, subtraction and multiplication.

First, however, it will be well to consider how the negative sign will enter into the operation of division as defined above, for it will be a convenience if the letter symbols used in the remainder of this section can be given their unrestricted meaning as positive or negative numbers.

(E1) The Negative Sign in Division.

The statement

$$(-a \div b) \times b = -a$$

presents no difficulty. By interpreting it in terms, for instance, of the journey units used in connection with simple addition and subtraction, it can easily be shown that

$$(-a \div b) = -(a \div b)$$

i.e.

$$(-a/b) = -(a/b)$$

This is division *of* a negative number. But is division *by* a negative number a comprehensible operation? If so, what does it mean? In any case, its meaning must be consistent with our definition of division, so we can start with

$$(a \div -b) \times -b = a$$

which brings us back to multiplication by a negative number. Now an explanation has already been given for the apparently incomprehensible operation of multiplication by a negative number, and it has been shown that no mistake will arise from using the formal rule

$$(a \times -b) = -(a \times b).$$

Applying this rule in the above case we have

$$a = (a \div -b) \times -b = -\{(a \div -b) \times b\}.$$

Therefore

$$(a \div -b) \times b = -a.$$

Comparing this with the previous result, *i.e.*

$$(-a \div b) \times b = -a$$

we see that the apparent process of division by a negative number will be consistent with our interpretation of multiplication by a negative number if $(a \div -b)$ is taken to mean the same thing as $-(a \div b)$, so that

$$(a \div -b) = (-a \div b) = -(a \div b).$$

Applying these formal rules to the case $(-a) \div (-b)$ will obviously give

$$(-a) \div (-b) = (a \div b).$$

Thus we have the three general rules for the combination of signs in division:—

Minus divided by Plus is Minus.
Plus divided by Minus is Minus.
Minus divided by Minus is Plus.

These, however, will not impose any additional burden on the memory, for they are the same as those for multiplication.

Now that an intelligible interpretation has been found for division of or by a negative number, together with the rules that apply, the letter symbols may be taken to represent any positive or negative numbers as practical conditions may require. On this basis we

Digitized by Google

can proceed to deduce formulæ appropriate to various operations with the fractional form.

(E2) **Various Operations with Fractions.**

In the following paragraphs the name fraction is taken to mean any combination of the form $(a \div b)$ where a and b are positive or negative numbers. The reader is asked to obliterate from his mind as completely as may be any preconceptions about fractions based on imperfectly or even misunderstood rules remembered from school days and to think instead of the operation of division as defined completely and exclusively by the statement

$$(a \div b) \times b = a.$$

(*a*) *Reduction of a Fraction to its lowest Terms.*

Suppose $a \times p = c$
$b \times p = d$

Then $(a \times p) \div (b \times p) = (c \div d)$

and by the definition of division

$$(a \times p) = (c \div d) \times (b \times p)$$

Therefore $a \times p = \{(c \div d) \times b\} \times p$

and $a = (c \div d) \times b$

whence, by definition $(a \div b) = (c \div d)$

i.e. $(a \times p) \div (b \times p) = (a \div b)$

or $ap/bp = a/b$

This shows that, if the numerator and denominator of a fraction contain a common factor, this factor can be removed from each without altering the magnitude of the fraction. This process is called the reduction of a fraction to its lowest terms.

(*b*) *Distribution of Denominator.*

By the Law of Distribution in multiplication

$$\{(a \div c) + (b \div c)\} \times c = (a \div c) \times c + (b \div c) \times c$$
$$= a + b$$

Therefore, by definition,

$$(a \div c) + (b \div c) = (a + b) \div c$$

or

$$\frac{a}{c} + \frac{b}{c} = \frac{a+b}{c}$$

It will be a useful exercise for the reader to prove for himself the statement

$$c \div (a + b) = (c \div a) + (c \div b).$$

If he succeeds the truth is not yet in him, for the proposition is false. The attempt to prove it will assist in impressing its untruth.

(*c*) *The Addition of Fractions.*

The results stated in (*a*) and (*b*) taken together show how any two fractions can be added together and expressed as a single fraction, for

$$\frac{a}{b} + \frac{c}{d} = \frac{ad}{bd} + \frac{cb}{db} = \frac{ad}{bd} + \frac{bc}{bd} = \frac{ad + bc}{bd}$$

The extension of this process to give

$$\frac{a}{b} + \frac{c}{d} + \frac{e}{f} = \frac{adf + cbf + ebd}{bdf}$$

is obvious, but the reader is advised to check it for himself. A little further thought will show that these formulæ are illustrations of the fact that only groups of like things can be combined arithmetically.

In virtue of the Law of Association the addition of any number of fractions can be represented as a single fraction by repeating the above process as often as necessary. It should be noted that the numerator of the combined fraction is obtained by combining according to sign the products of each numerator with all the other denominators, the sign being considered to be attached to the numerator in each case. Thus

$$\frac{a}{b} - \frac{c}{d} + \frac{e}{f} = \frac{adf - cbf + ebd}{bdf}$$

(*d*) *Multiplication of a Fraction.*

Since a fraction, interpreted quantitatively, is not essentially different from a whole number, the multiplication of a fraction by a whole number does not involve any new ideas at all. It is worth while to notice, however, that the result of any such multiplication can be represented as a single fraction.

$(a \div b) \times b = a$ by definition.

Therefore $(a \div b) \times b \times c = a \times c$
$(a \div b) \times c \times b = a \times c$ (Law of Commutation)

i.e. $\{(a \div b) \times c\} \times b = (a \times c)$

Therefore $(a \div b) \times c = (a \times c) \div b$

by the definition of division.

In fraction form

$$(a/b) \times c = (ac/b).$$

(*e*) *Multiplication by a Fraction.*

Remembering that the fundamental definition of the operation of multiplication is that contained in the statement

$a \times b = a + a + a + a + etc.$, b terms in all

Digitized by Google

it appears that multiplication *by* a fraction is not a comprehensible operation, and in point of fact it certainly is not. There is nevertheless an operation that can conveniently be described as multiplication by a fraction provided its real character is clearly understood. The fraction $(a \div b)$ can be multiplied by c giving $(a \div b) \times c$. This number or fraction can then be divided by d, giving $\{(a \div b) \times c\} \div d$. Now this process of multiplication by c followed by division by d can be expressed for the sake of abbreviation as multiplication by $(c \div d)$. In fractional form the operations can then be written

$$\frac{a}{b} \times \frac{c}{d}$$

It will be assumed that whenever the apparent process of multiplication by a fraction arises in practice it will be legitimate to re-interpret the operation in the above manner, *i.e.*,

$$\frac{a}{b} \times \frac{c}{d} = \{(a \div b) \times c\} \div d.$$

In fact this assumption is necessary for only on these lines can a comprehensible meaning be attached to the process. On this understanding we can proceed to find the single fraction that shall have the same magnitude as the " product " of two fractions. Suppose $(e \div f)$ to be this fraction. Then

$$\{(a \div b) \times c\} \div d = (e \div f)$$

and by the definition of division

$$(a \div b) \times c = (e \div f) \times d.$$

Now it has been shown above that

$$(a \div b) \times c = (a \times c) \div b$$

therefore $\quad (a \times c) \div b = (e \div f) \times d$

and by definition $\quad (a \times c) = (e \div f) \times d \times b$
$\qquad\qquad\qquad\qquad = (e \div f) \times (b \times d)$

therefore $\quad (a \times c) \div (b \times d) = (e \div f)$

i.e.

$$\frac{a}{b} \times \frac{c}{d} = \{(a \div b) \times c\} \div d = (a \times c) \div (b \times d) = \frac{ac}{bd}$$

The extension of the above reasoning to give

$$\frac{a}{b} \times \frac{c}{d} \times \frac{e}{f} \times \frac{g}{h} \times etc. = \frac{aceg\ etc.}{bdfh\ etc.}$$

is a straightforward application of the Law of Association.

(*f*) *Division of a Fraction by a Fraction.*

Strictly speaking division by a fraction is no more intelligible than multiplication by a fraction. It can easily be shown, however, that its meaning can be immediately derived from that of multiplication by a fraction, if it be assumed, as it obviously must be, that the apparent process of division by a fraction is consistent with the formal definition of division.

Putting $\quad (a \div b) \div (c \div d) = (e \div f)$

then by the definition of division

$$(a \div b) = (e \div f) \times (c \div d)$$
$$= \{(e \div f) \times c\} \div d$$

as above.

Therefore $\quad (a \div b) \times d = (e \div f) \times c$

and by definition $\quad \{(a \div b) \times d\} \div c = (e \div f)$

Therefore $\quad (a \div b) \div (c \div d) = \{(a \div b) \times d\} \div c$

and on the understanding indicated in para. (*e*) above, the right hand side can be written in the form $(a/b) \times (d/c)$ giving

$$\frac{a}{b} \div \frac{c}{d} = \frac{a}{b} \times \frac{d}{c} = \frac{ad}{bc}$$

This shows that dividing by a fraction is the same as multiplying by the same fraction inverted. The result of inverting a fraction in this way is called the " reciprocal " of the fraction.

Since $c = c \div 1$, we have as a special case

$$(a/b) \div c = (a/b) \times (1/c) = a/bc.$$

Thus division by a number can be represented as multiplication by a fraction having 1 as numerator and the number as denominator.

(E3) **The Division of Zero by a Number.**

There is no difficulty about this operation. The fraction $(0 \div a)$, if it exists, must have a meaning consistent with the definition

$$(0 \div a) \times a = 0.$$

for any positive or negative value of a. Now, as shown in para. D2 of Section 3,

$$0 \times a = 0$$

Therefore, the statement that

$$(0 \div a) = 0$$

fits in quite satisfactory with the rest of our rules and definitions.

Digitized by Google

(E4) The Division of a Number by Zero, and the Collapse of Mathematics.

What is the meaning of $(a \div 0)$? The meaning, if any, must be consistent with the definition

$$(a \div 0) \times 0 = a.$$

But for all positive and negative numbers

$$b \times 0 = 0$$

and the reader can easily prove for himself that this is equally true for any positive or negative fraction. Therefore $(a \div 0)$ must be something essentially different from a whole number or a fraction, and the rules of algebra must *not* be applied to the group $(a \div 0)$. To prove this statement we will proceed to wreck the whole structure of mathematics by assuming that they can be applied to it.

$$\frac{a}{0} + \frac{b}{c} = \frac{a \times c + b \times 0}{c \times 0} \quad \text{by para. E2 } (c)$$

$$= \frac{ac}{0}$$

Now let d be some other number different from b. Then

$$\frac{a}{0} + \frac{d}{c} = \frac{a \times c + d \times 0}{c \times 0}$$

$$= \frac{ac}{0}$$

Therefore

$$\frac{a}{0} + \frac{d}{c} = \frac{a}{0} + \frac{b}{c}$$

$$\frac{d}{c} = \frac{b}{c}$$

and finally

$$b = d$$

Therefore, any number is equal to any other number, and the whole of mathematics is nonsense.

In fact, the group $(a \div 0)$ is a germ of insanity that is liable to infect the most sedate of propositions and set it babbling gibberish. If at any time a set of equations goes thus suddenly mad and announces that the moon is made of green cheese the baneful effect of division by zero can be suspected. The germ may have crept in disguised as something quite harmless and respectable, for instance, division by $(a—b)$ at one point, followed at a later stage by the condition "let $a = b$."

(F) The Fundamental Rules of Algebra—General Conclusions.

Intelligible interpretations have now been found for positive and negative fractions and for the addition, subtraction, multiplication and division of positive and negative fractions. We can now proceed to the full generalisation of the letter symbols. In any expression in which letter symbols are associated with all or any of the operations of addition, subtraction, multiplication, or division, the letter symbols may be taken to represent any positive or negative whole numbers (integers) or positive or negative fractions as the conditions of the problem may require.

The writer has deliberately refrained from presenting any tabular summary of the rules and formulæ so far developed. Any reader who is new to the subject is strongly advised to do this for himself, as this will help him in the understanding and memorising of the more important conclusions. He is also recommended to familiarise himself with the technique involved by working out far more examples than can be presented in the limited space available for this series. Plenty can be found in any elementary text-book of the subject. An even better, and certainly more interesting way, is to make up a number of examples for some imaginary pupil.

(G) Mathematics as a Thought-Saving Device.

Before going on to the interesting elaborations and developments of the fundamental rules of algebra it will be well to say a final word with regard to the character of mathematics in general and the right way of applying it.

The writer has been at some pains to invest the mystic symbols of mathematics with a precise and real, one might almost say homely, significance. This is strictly in accordance with the spirit of modern mathematicians, who are becoming increasingly distrustful of any purely formal symbolism of doubtful interpretation, and who seek to base their science on a few simple ideas about number or magnitude. Clearness in the initial ideas is essential, and this clearness has to be paid for in hard thought; but it is not for a moment suggested that all the ideas involved are to be turned over in the mind

Digitized by Google

every time the fundamental formulæ are applied. In fact, nothing could be farther from the object of mathematics, which is, though it may sound paradoxical, the elimination of thought. This is very clearly stated by Prof. A. N. Whitehead, a mathematician who combines the intellect of a scientist with the imagination of a poet and whose book, *An Introduction to Mathematics* (Home University Library) can be very warmly recommended to all who are interested in this subject. The object of the symbolism of mathematics is to enable us to "make transitions in reasoning almost mechanically by the eye, which otherwise would call into play the higher faculties of the brain. It is a profoundly erroneous truism . . . that we should cultivate the habit of thinking of what we are doing. The precise opposite is the case. Civilisation advances by extending the number of important operations that we can perform without thinking about them." This may sound like a glorification of "rule of thumb," but it is "rule of thumb" with a difference. To apply a formula without thinking about it is a gesture not unworthy of a mathematician. To apply it without understanding it, or without ever having understood it, is at best a *pis aller* and at worst an unintelligent faith in Mumbo-Jumbo.

Examples—Division.

1. Show that

$$\frac{3}{10}+\frac{7}{100}+\frac{9}{1,000}+\frac{6}{10,000}+\frac{8}{100,000}=\frac{37,968}{100,000}$$

2. If $\frac{1}{b}-\frac{1}{a}=\frac{c}{ab}$

prove that $ac+bc=aa-bb$

3. Show that

$$\left\{\left(\frac{1}{a}+\frac{1}{b}+\frac{1}{c}\right)-\left(\frac{a}{bc}+\frac{b}{ac}+\frac{c}{ab}\right)\right\}\div\left(1-\frac{b}{a}\right)\left(1-\frac{c}{b}\right)\left(1-\frac{a}{c}\right)=\frac{1}{a-b}+\frac{1}{b-c}+\frac{1}{c-a}$$

4. Prove that if

$$R_0R_1R_2+R_1R_2R_3+R_0R_3R_1-R_1R_2R_3=0$$

$$\frac{1}{R_0}=\frac{1}{R_1}+\frac{1}{R_2}+\frac{1}{R_3}$$

5. Show that $\frac{R_1R_2}{R_1+R_2}$

where R_1 and R_2 are positive numbers or fractions, is less than the smaller of R_1 and R_2.

(*To be continued*).

THE EMERALD WAVEMETER.

This wavemeter, designed by Lt.-Col. Edgeworth, is an instrument with which the amateur can obtain accurate measurements of wavelength —the accuracy of calibration being a lasting quality not depending on the actual valve in the wavemeter, provided a similar type to the one originally supplied is used.

Another very good point that the average user will appreciate, is that the wavemeter is direct reading—*i.e.*, the wavelength is read off directly on the wavemeter scale and not from a calibration curve. A very neat arrangement is adopted in order to give a large and uniform wavelength scale, and it speaks well for both the design and the construction of the instrument that the slow motion arrangement on the condenser may be relied on sufficiently well to make the instrument direct reading.

Various two-volt valves, made by different makers, but more or less similar in type, were tried in one of these wavemeters, and the wavelength checked against our standard heterodyne instrument.

The method of testing was to obtain a heterodyne note of about 1,000 volts with the valve supplied and then to insert other valves in succession and note the change in beat note—which change was exceedingly small, *even near the minimum of the wavemeter condenser*, thus showing that valve capacities were unimportant in determining the calibration.

The price of the wavemeter is remarkably low, but in spite of this the instrument can be strongly recommended as reliable and accurate as well as robust in construction.

It may be obtained from Messrs. Heath and Co., New Eltham, S.E.9. A. P. C.

VARLEY MAGNET CO.

The Varley Magnet Co., which is well-known as a subsidiary Company of Oliver Pell Control Ltd., is now marketing Varley Bi-Duplex Wire Wound Anode Resistances. This firm is not connected in any way with the Varley Radio Co., but we find that there has been a little confusion owing to the similarity in name.

Digitized by Google

Problems in Broadcast Receiver Design.

A Lecture delivered by Mr. P. P. ECKERSLEY, Chief Engineer of the British Broadcasting Company, before the Radio Society of Great Britain, on 26th May, 1926.

[R160.04

I AM going to try to take you through some of the problems that beset the designer of broadcast reception apparatus, and if I do not accept certain ideas that are common, I do so in the hope that discussion will be promoted.

Broadcasting, like any system of communication, depends on the two ends of the chain, Transmitter and Receiver, and for that reason one who is responsible for the transmission side has some excuse for talking about reception.

I would say that in general there are two types of receiver which people visualise when thinking of broadcast reception. The first is one which has a good many knobs on it, and about which people tell lies to their friends—to borrow an Americanism a "reaching-out receiver." The second is the "local station" type which gives, or tries to give, perfect quality.

I should like first to deal with the "reaching-out" set. It is designed to get the distant station and therefore has great sensitivity. I would say that in general there are two main types of "reaching-out" receiver: one is the Neutrodyne or tuned high frequency magnifier, and the other the "Supersonic." The principle of the neutrodyne is illustrated in Fig. 1, which shows a tuned anode system of magnification with two similar circuits in cascade; inter-electrode valve capacity, among other qualities of the circuit, introduce reaction and the whole system would oscillate were it not for the introduction of small inter-electrode balancing capacities.

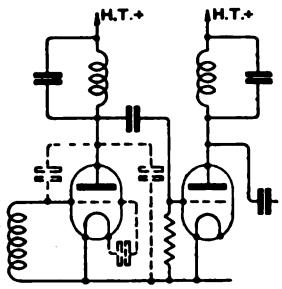

Fig. 1. *Two circuits in cascade employing the neutrodyne principle.*

A typical form of this circuit which has taken on here and in America, is shown in Fig. 2, where aperiodic windings give a "step up" effect and allow a gain of sensitivity.

A very common type of set used in America employs two high frequency amplifiers, a detector and one or two note magnifiers, switched in or out at will. It is sensitive enough to pick up fairly distant stations, and sufficiently selective for most purposes, a ubiquitous receiver which is deservedly popular. The maximum number of high frequency stages used in one set is five (used in a British set). This is one developed by Captain Round in this country, namely the "Straight Eight," which has a larger number of neutrodyne stages than any receiver in the world.

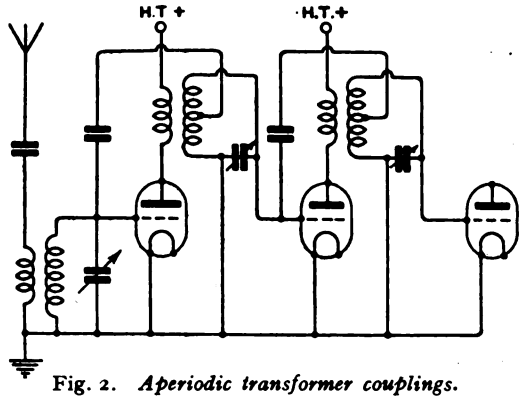

Fig. 2. *Aperiodic transformer couplings.*

The principle adopted has been to have a smaller magnification per stage than is usual with the multi-cascade arrangement, which has the advantage of very great selectivity. But the main disadvantage of this type of set is that the number of handles to be accurately set is considerable, otherwise the system has much to recommend it. It is only by getting them adjusted one by one that you get the signal, and as the tendency must be towards simplification, I think that that fact might be considered a disadvantage of the neutrodyne receiver. Otherwise it is extremely simple and a perfectly practicable

Digitized by Google

proposition. The reproduction can be made good; the set can be used close to the local station without undue effects of saturation, by mistuning the aerial circuit—a crude method but one that works.

The superheterodyne is the other main type used for distant receiving. The theoretical diagram is given in Fig. 3.

If you receive a certain signal in a circuit with a frequency of N_1 and introduce a closed circuit beating with that circuit with a frequency of N_2, after rectification you produce a new frequency, which is equal to $N_1 \pm N_2$. Obviously in receiving a particular frequency and beating it with another, you obtain a third frequency, and can amplify that third frequency by any means that you like. Selectivity comes in by the fact that the small change in the added frequency makes a large change in the beat frequency, and any other station coming in at a different frequency produces signals which, in a highly selective high frequency receiver on the beat note, will be completely lost. You get over the disadvantage in the previous receiver inasmuch as theoretically there need only be two adjustments, namely the aerial tuning and the beat note tuning, but there is an ambiguity: you can adjust the added frequency by a certain percentage up or down

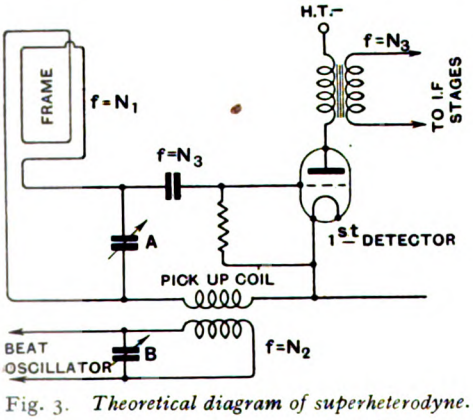

Fig. 3. *Theoretical diagram of superheterodyne.*

and produce the same beat frequency. This, however, has been got over ingeniously in one particular receiver.

What is done is to use a coupling (Fig. 4). *A* is the adjustment on the aerial and *B* is the adjustment on the beat note. These two are coupled together mechanically so that they both turn together. Any small discrepancy between the two readings can be adjusted, as the coupling is not rigid and it is possible to move one dial without the other to get final adjustment.

A disadvantage of the superheterodyne is the tendency to saturate when you are

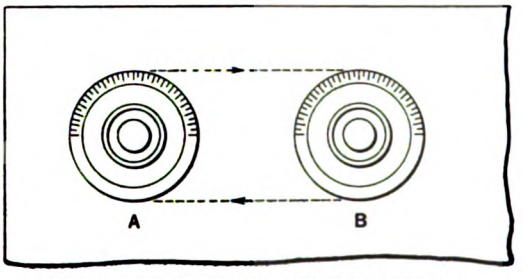

Fig. 4. *Mechanical coupling arrangement.*

listening to the local station. The preponderating effect of the local station is apt to produce saturation in the rectifying valve, and very poor quality indeed. Obviously, although some do not think so, this receiver, which incorporates an independent oscillator, will produce interference with other receivers; the aerial will pick up a certain amount of the beat oscillations and radiate them, other listeners will get a whistle, if the beat frequency nearly coincides with the frequency on which they happen to be listening. This can be overcome, and it is advisable to do so, by putting a high frequency stage between the aerial and the beat producing system. If the high frequency stage is properly neutrodyned, Fig. 5, and that is important, you will get a better measure of freedom from interfering with other people. The fact that a frame only is used minimises the possibilities of interruption. But I can assure users of frames that they radiate quite enough.

In summing up the general principles of these two types of receiver, "superheterodyne" and "neutrodyne," I am aware that there are other methods of achieving high frequency magnification, but those with which I have dealt represent two distinct types, on which practically all others are based, one way or another.

Coming to a consideration of the local station receiver, I feel very strongly that the development of broadcasting must be towards alternative stations with as little interference as the system of to-day gives. It is our proud

Digitized by Google

boast that 80 or 90 per cent. of the population can receive broadcasting on very simple sets. In using the term "crystal area" I mean it to be known as an area in which any simple receiver can get absolutely uninterfered-with reception. What can be received on a crystal set satisfactorily will be sufficiently powerful to drown local interference such as trams, railways and so forth, and it is possible thus to concentrate on a programme. While there will always be those who are interested in the electrical side, I still think that the main development of broadcasting must be an interest in what is received rather than an interest in the method of receiving it, and that is the justification for the local station receiver—giving above all things perfect quality. We must concentrate upon receiving in our rooms sounds that do not differ

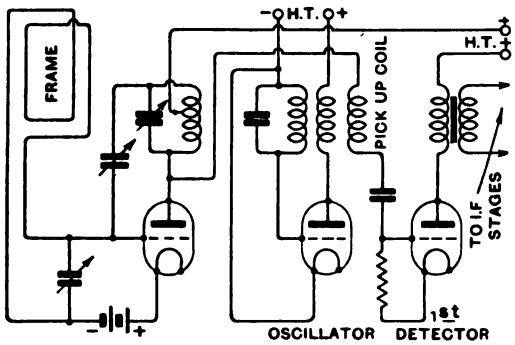

Fig. 5. *Circuit showing method of neutralising.*

in great respect from the sounds produced in the studio. The obvious criticism of the local station receiver is, where is the variety that it is possible to get from broadcasting? As I have said before, future engineering development must be towards giving alternative programmes, but they must be as strong as the local programme under the present system. If this is so, we shall have to get more selectivity into our receiving sets. The "crystal area" policy has produced many sets that are not efficient on the high frequency side; but 90 per cent. of valve sets I inspected the other day were unable to cut out the local station. The policy of alternative stations obviously demands selectivity. "Local receivers" rely too much on the straight "detector and low frequency" circuit. Selectivity is extremely poor, and, in order to use "bottom bend" rectification a considerable sweep on the detector grid is necessary, which rather points to it being more satisfactory to put in at least one high frequency stage. To take the high frequency first, it is very easy to add a high frequency stage on an existing receiver. Two high frequency stages, shall we say, neutrodyned with a one-handled adjustment, would be sufficient for most listeners even with an indoor aerial. However, even with satisfactory high frequency, the method of detection needs careful consideration, because, although "any old thing" works, very few "old things" work at all well. The commonest form of detection used throughout the world is the grid-leak and condenser method. While it is true that this method frequently facilitates the use of reaction, no instrument should rely entirely on the use of reaction for its efficiency.

In the second place, many people find that a high value of grid-leak will give a louder signal, but it will give worse distortion too. It is possible with a detector of the bottom bend type, that is to say, utilising the non-linear properties of a valve characteristic, very similar to that of many crystals, to introduce to a limited extent reaction in two high frequency stages which will not involve any oscillation in the aerial and which will never interfere. So that the argument that the grid-leak will give you facility in the use of reaction falls to the ground. In general, with the grid-leak method the disadvantage is that you rectify first and amplify afterwards; but with bottom bend you amplify first and then rectify.

A point about these two systems is that in essence they do not differ to any great degree as far as their function is concerned. You may draw "A" simply as a box and call it a rectifier which has in series with it a resistance and a condenser. You can draw "B" as a box and call it a rectifier in the same way. But the "A" system has the disadvantage that the impedance values of the grid circuit are much greater than in "B" and the values of the components will more greatly affect performance.

I do not wish it to be thought that the grid-leak method need be so absolutely condemned, but I think, after comparing it judicially with the bottom bend method, the latter scores considerably, as it is, as I have said before, in fact a crystal rectifier. You

Digitized by Google

can work this bottom bend rectifier with grid current or without, and the question as to whether grid current produces distortion in the bottom bend rectifier is answered very inconclusively by experiments on the point. It needs a high anode voltage and a high impedance value. In that connection, it is interesting that grid current almost inevitably flows in high frequency magnification, and those systems, unlike low frequency amplification, with grid current present, do not introduce very much distortion, the reason perhaps being that the high frequency circuits in front of the grid, being tuned, are free to swing, and are therefore not unduly influenced by the load of the grid current, and are not immediately checked, like low frequency, by the effect of the load.

I would ask, "Why is it that in valve sets the crystal is not more used as a rectifier?" It is true they are said to be unreliable, but in speaking of crystals I mean the sort that was used before the valve was invented. Did we have a lot of trouble with them in those days? From beginning to end they never seemed to do anything else but rectify.

Fig. 6 shows a convenient way of using a crystal rectifier with one high frequency

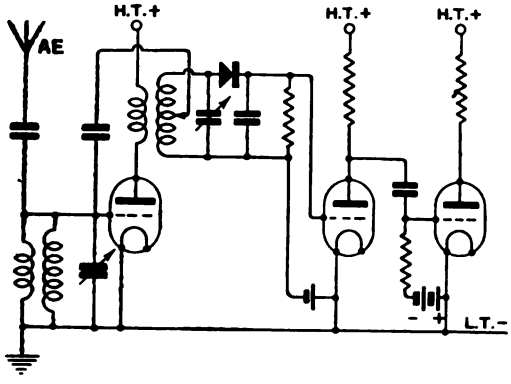

Fig. 6.
Convenient circuit for using a crystal with one H.F. valve stage neutralised followed by L.F. stages.

valve neutrodyned and one or two low frequency stages. This system has the advantage that there is less to maintain in the way of filaments and high tension. I doubt whether there is any difference between a crystal and a bottom bend rectifier provided you have sufficient grid sweep. It is possibly not quite so sensitive and might be unreliable but with correct design that is not necessarily so.

Turning to the low frequency amplifier, it is definitely dangerous to use transformers,

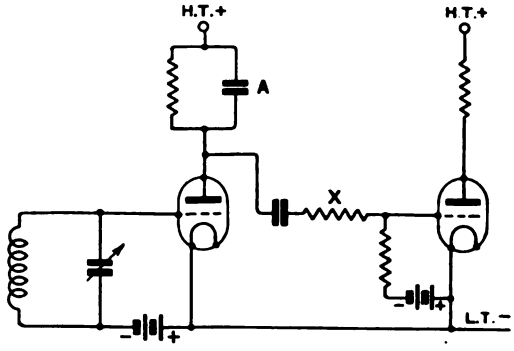

Fig. 7. *Interesting circuit for producing a drop in H.F. voltage.*

mainly because transformers are very difficult to design, and even the best that we have designed still suffer from some slight falling off in characteristics on either side of the frequency gamut, and few appreciate the important point that a load on the secondary or even on the primary makes an enormous difference to the characteristics. A damp transformer may completely change its characteristics by leakage across the terminal. Doubtless the justification for transformers in the past has been that they do give a tremendous lot of "noise," and in the absence of the perfect loud-speaker perhaps there was some excuse, but it is now time to say "good-bye" to the transformer wherever we can and introduce resistance or choke capacity. I am wondering, in the light of the disadvantage with resistance capacity—the necessity for increased high tension—whether one would not gain by using choke capacity, and it would be interesting to know if anyone has any figures or views on the question.

With resistance type of magnification, there is a disadvantage in that the low frequency amplifier may pick up high frequency and magnify that up as well. This is apt to produce nasty reactions. There is an interesting connection, due to Captain Round, which may be of interest. The method is shown in Fig. 7. Connect a resistance *X*, which has the effect of producing a drop of

Digitized by Google

high frequency voltage so that the voltage on the grid, thanks to the valve inter-electrode capacity, is negligible. A very useful point.

The use of choke or resistance capacity brings up the question of power supply. I, myself, although I use rather an inefficient circuit and a considerable amount of voltage and current, am fortunate in living in a district which has A.C. supply which I take through a transformer with a centre tap secondary and rectify and smooth. The method I use is shown in Fig. 8. There is a large choke *K* and a condenser *Z* and double rectification. The circuit can easily be smoothed. I find a couple of .5μF condensers with a 20 or 30 henry choke are quite sufficient. I find it possible to light my two low frequency valves from the power mains also, but in order to avoid fluctuating A.C. on the grids it is necessary to take the grids down to the centre point of the secondary of the filament transformers.

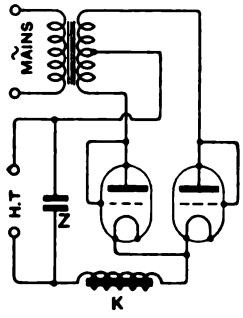

Fig. 8.
A.C. smoothing circuit.

With this method it is not necessary to put a potentiometer across the valves. The particular method that I use is rather expensive because I use three-electrode valves instead of two. Perhaps it would be better to load all the valves from a low tension accumulator charged through another system, but I feel sure that the system can be made to be extremely cheap, even though the initial outlay is perhaps a little more. Operating on a power circuit with a cheaper unit its maintenance would amount to practically nothing. Perhaps the future will see valves with finer filaments and with even less filament current than they have to-day, when dry battery lighting will be possible on an economical scale. Remembering that the average loud-speaker to-day has a very low efficiency, perhaps the high efficiency loud-speaker of the future will remove the necessity for a constant change of high tension batteries.

I am not sure whether controlling the volume of a set by dimming the filaments of high frequency valves is a good one. It is possible to dim the filaments but when you have a set in one room and a loud-speaker in another then it becomes rather unsatisfactory practically. It should be possible to design a potentiometer system on the loud-speaker itself, bearing in mind that it is necessary to keep a constant impedance across the transformer.

Finally, I give the circuit shown in Fig. 9, not because I think it represents finality, but merely to show what might be done on the lines that I have suggested. A small series condenser in the aerial circuit will make it possible to calibrate the closed circuit. There may be one or two high frequency valves. The crystal set can be connected across the secondary of a high frequency transformer, which is neutrodyned, thus introducing a limited amount of reaction without the possibility of re-radiating.

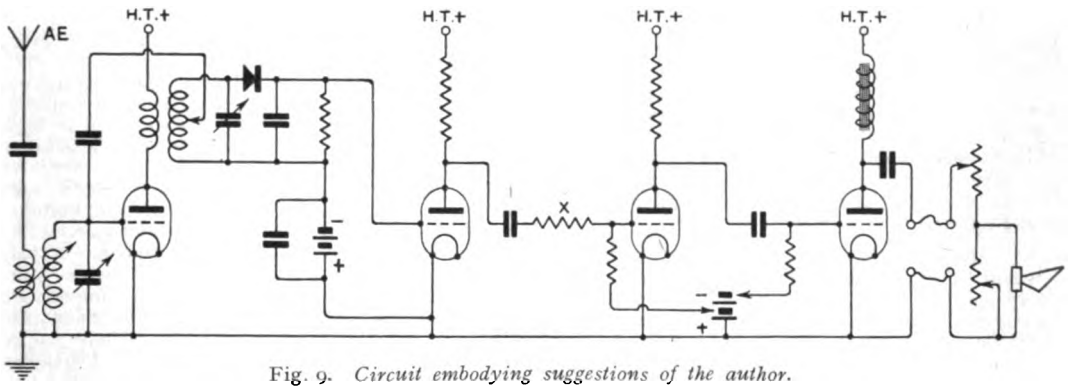

Fig. 9. *Circuit embodying suggestions of the author.*

Digitized by Google

DISCUSSION.

Admiral Sir H. B. Jackson: Captain Eckersley has enlightened, enlivened and advised us a good deal. He is helping all listeners by trying to stop this oscillation nuisance. I am very much in agreement with what he has said about it. I live within a mile of that West End store and have almost given up reaching out, except when 2LO is not working. When I do try there is always oscillation present; he is quite right in driving the point home.

Mr. R. W. Minter: I rise to answer Captain Eckersley's accusations against the neutrodyne. I think the reception problem starts at the transmitter, and it seems to me rather late in the day to start up so many transmitters, irrespective of what is happening, and then get the engineers to clean up the mess. As far as I can see, the neutrodyne is the thing that solves the problem we have at the present moment. In his description of the neutrodyne, Captain Eckersley said one or two things which were not quite right, but, in the first place, a little more information might be useful. The neutrodyne is in two sections usually. The one with two stages is the unshielded one, and that with more than two stages is shielded. With more than three stages it does not seem at all satisfactory. The trouble which arises in this country, is that the American neutrodyne has been developed for American valves. Up to the the present time, no British manufacturer has produced a valve which happens to have a capacity equal to that of the R.C.A. valves used in America with the neutrodyne, so that anybody using an American neutrodyne here who cannot get the valves which are used with it in America will have bad results. As to rectification, and Captain Eckersley's remarks about the grid-leak, there is a neutrodyne without the grid-leak, but it does not seem to be as popular because it does not give so much noise. Referring to crystal rectification, I remember that at one time we had good crystals, which would not go off, but I do not think one is made at the present time; I have had a great deal of trouble with them during the last few years. They will not stand any appreciable current through them, and I think they would be rather out of place in an amplifier with high frequency stages in front of them.

Mr. H. L. Kirke: I should like to thank Captain Eckersley for his excellent lecture, and to make one or two comments. With regard to reaction, I think that it is a thing which is so valuable to the manufacturer that he must use it in order to get his price down and compete, but I also think that manufacturers should have a little conscience and should endeavour to produce sets in which reaction is controllable. I have had the misfortune to advise friends of mine at various times on the buying of sets, and on several occasions have actually tested the set before sending it to them. I think on every occasion the reaction was so absurdly coarse, except for two positions, one with great oscillation and the other irregularity in signal strengths, that it was necessary to stand on your toes, grease your fingers, and, after ten minutes playing about, you might get a reasonable signal. Greater care should be taken in designing sets so that reaction should be capable of complete control. Another point I should like to bring out is the question of grid currents in bottom bend rectifiers. I have had a certain amount of experience in designing a particular piece of apparatus in which it is necessary to use a rectifier which is very perfect from the point of view of no distortion, and we found it essential to use bottom bend rectification, which was the best. It was also essential that there should be no grid current, but the grid circuit was an aperiodic one. I think the distortion from grid current is due to the fact that it produces harmonics in the carrier wave and the side band, and the harmonics in the carrier wave and the side band heterodyne, showing themselves as harmonics in the rectified low frequency current. If you have a fairly low damped oscillatory circuit which can by-pass all the harmonics produced by the distorting grid current you will not get distortion. With regard to crystal rectifiers, I think that carborundum has the advantage that it is a high resistance rectifier, and as the amount of damping introduced across the circuit varies with the resistance, it is an advantage to use a high resistance rectifier, in that variations in the resistance caused by adjusting the contact will not have such a great variation in the damping of the circuit. With regard to transformer coupling, resistance coupling and choke coupling, with resistance coupling you have to use low impedance valves, because you lose a lot of high tension voltage in the resistance, and you do not get the magnification out of the low impedance valve that you do out of the valve plus transformer. But if you use choke coupling you do not lose any high tension in the choke, or, at any rate, very little, and you can use high impedance, high magnification valves and get the same amount of output, although for less input, than with the low impedance resistance-coupled valve. That is, you can get the same amount of voltage sweep out of the valve without distortion with a high magnification valve with choke-coupling as out of a low magnification valve using resistance coupling, and that is the great advantage of choke coupling, I think. In connection with the question of high tension, usually it is not necessary to use resistance magnifiers before the telephone stage, where we use low anode voltage, but where one has a loud-speaker it is necessary to use a high tension voltage, 100 or 150 volts, if one wants to get good quality output without great distortion. One might just as well use this H.T. on the valve before, so that one gets plenty of sweep to use the high impedance valves without distortion at all. In connection with rectifiers, it was mentioned that there are no two-electrode valves on the market. I believe, however, that one is now being designed by one of the valve companies, working on the 6-volt. ¼-amp. filament, and it is the same as the standard valve of that type, without a grid.

Mr. G. G. Blake: I should like to add my thanks to Captain Eckersley for his most instructive and amusing lecture. He mentioned his trip to America and the investigations he made there, but he did not mention the "Sodion" valve. In 1922, Donle invented a valve called the "Sodion," which, it was claimed, was absolutely non-oscillating; it was also claimed that its sensitivity was even greater than a valve making

Digitized by Google

use of reaction.* I should like to have Captain Eckersley's opinion of that type of valve. With regard to Captain Eckersley's last diagram, there is one point that stands out in my mind particularly. On the blackboard we have a very complicated arrangement of circuits, and it seems to me that it is fortunate that a crystal circuit is included, for then if everything else failed one could plug in a receiver and use it straight off the crystal.

Mr. R. E. H. Carpenter: I feel rather like a small puppy who has been tied by a strong string to the back of a fast car, and have not much breath left, but my interest in anything Captain Eckersley says was sufficient to have kept me running. The remarks made by Mr. Kirke tacitly stressed the only point I wished to make—that the best of circuit arrangements are quite useless unless quantities and values are properly chosen. Captain Eckersley has drawn on the board a circuit which, if I may venture to have an opinion when he is in the room, is an excellent circuit, but unless the various values—the values of the leaks, the coupling condensers and so on—and the types of valves, or, at any rate their impedances, are given, I think that circuit might cause a great deal of disappointment, particularly as it comes from the fount of "Please don't do it" (laughter), and it is therefore sure to receive a great deal of attention.

Mr. Maurice Child: I have done a good deal of experimental work in connection with crystals in telephonic reception. Some years ago I made some experiments in a very short time, when there were a series of experimental transmissions from Chelmsford on a fairly long wavelength. I had, for the purpose of test, a standard ship receiver designed by Messrs. Siemens Brothers, and in that receiver it was possible to insert various types of crystals. It might interest you to know—and probably Captain Eckersley knows—that the quality of reproduction with a receiver with absolutely fixed adjustments varies enormously according to the crystal you are using, and I have a very clear recollection that in those experiments the best quality of reproduction, using a standard adjustment in each case as regards tuning coils and so on, was given by a zincite-bornite detector. While I have a great deal of praise for the carborundum detector for ordinary commercial purposes, I venture to suggest that it has one serious disadvantage, in that there are very few specimens of carborundum which work really well unless you apply local potential to it. Captain Eckersley has touched on another matter to which I have given a good deal of attention, probably in common with many others, and that is the question of power supply, and I have been trying to get out comparatively small units. Usually, one firm makes the transformer, another makes the valve, or various kinds of valves, another firm tries to make a choke, and can't (laughter), and so on. We have to put the whole thing together, and after a lot of juggling about we manage to get a rectifier which is quiet on two valves and gives a horrid noise on three, but on four the whole receiver and rectifier packs up completely and we get nothing. That is solely because very few firms—in fact, I do not know of any—really make proper sized transformers for the job. I have in mind one which has to handle 10 watts or so, and it needs quite an effort to lift it to the table. Transformers to give adequate outputs can be designed in quite small sizes and at a reasonable price. I do not agree with Captain Eckersley's figures with regard to his condensers and their requirements. I have found that it is not satisfactory, on 50-cycle A.C. supply, to use anything less than three 4μF condensers, with a low resistance, highly inductive choke. That gives you a smoothing out which is absolutely good for a 4-valve set. The trouble with power supply for high tension is not set aside by simply saying that we can do all this quite smoothly with two or three valves. The apparatus, to be satisfactory, has got to be in such a form that, no matter what a man's receiving set may be, it will work it properly. If you have an experimental receiver, you have probably an arrangement of switches on it, so that you can have one, two or three valves, but when you put that on a good new dry battery it makes very little difference to your high tension voltage whether you put on one, two or three valves. You get a voltage drop, but it is not very serious. The accumulator battery solves that problem perfectly. Its voltage remains practically constant, irrespective of the number of valves used, so long as it is in good condition, but that cannot be said of the ordinary type of A.C. rectifier. In the past we have had to put up with the three-electrode valve with the grid joined up to the plate for these rectifiers, and even so the internal resistance—you note that I use the term "resistance," and I think it is right—of the valves is of such an order that the moment you put on the second valve, down go the high tension volts. We start with, say, 100, and inevitably reduce the high tension volts when increasing the output current from, say, a couple of milliamperes to 50 or 60. That is the usual thing. That problem has been solved at last by an enterprising manufacturer, who has turned out a special valve which is just about to be put on the market. I was testing it this morning, and it might be of interest if I give some of the figures which I obtained. It was possible to get an output of 80 milliamperes at 40 volts absolutely smooth D.C., putting on an A.C. voltage in the first stage, from the transformer, of 130. When I reduced the milliamperes to 18, which is far more than most sets require, the pressure was 130 volts. I think that is a very fair performance. The valve takes 4 volts on the filament, with 1.1 amps maximum load, and the manufacturers state that it is impossible to test the emission because if attempted up to the maximum it would completely destroy the valve. The internal resistance is stated to be only 375 ohms —I have not tested it—accurately, but when you get a valve of that order and put two of them on a rectifying circuit, it is possible to put one, two or three valves on your receiving set and only get a variation of 3 or 4 volts in 100 to 120 maximum with each valve coming on. That compares exceedingly favourably with an ordinary dry cell battery, and I think the A.C. supply with valves will be the thing of the future. The problem is just about solved at the present time.

* Harold P. Donle, *Proceedings of Institute of Radio Engineers*, Vol. XV., No. 2, p. 97, 1923.

Digitized by Google

Mr. D. S. Richards: I should like to put forward the view of the man in the street who has the problem of maintenance to consider. We have heard some very excellent suggestions this evening, and to me it seems to indicate that the time is rapidly approaching for further development and general improvement in the design of broadcast receivers. The subject of high tension supply will never, I think, be effectively solved until further advancements are accomplished in the science and construction of valves. I should like to mention that in the town in which I reside, direct current has been used quite successfully for obtaining high tension supply. But apparatus has been constructed which will give absolute satisfaction in one part of the town, and when the same apparatus is used in another part, the high tension so derived develops an unpleasant hum. The whole success of broadcasting in the future is bound up very largely with the factor of maintenance, and I doubt whether Captain Eckersley or anybody else in this great wireless community can persuade the general public to carry out any great alterations or improvements in their sets while the factor maintenance still provides so many objections. Low tension supply from house mains generally involves a bigger electric light bill. We must have cheap electricity before we can make the broadcast receiver quite the simple and inexpensive instrument that would be so desirable.

Mr. J. H. Reeves: On this question of maintenance, rectified A.C. has got to such a stage that you can use it on an exceedingly powerful superheterodyne set, as I have, and there is not a sign of a hum anywhere. I should like to confirm Mr. Child's remarks with regard to the new valves, with extremely low impedance, which are just on the market, but there is another point which Mr. Child did not mention, and that is that we have various periodicities and various voltages on our A.C. supply. Only last Saturday I heard of another enterprising firm which is going to turn out a transformer which can be used at practically any voltage and will work at any periodicity, so that possibly before the summer is out the whole question of rectified A.C.—where we are so fortunate as to have A.C. supply—will be fully solved. There is one point, raised by Captain Eckersley, with which I disagree, and that is his reference to the great advantage of simplicity for sweeping. Undoubtedly it seems very nice to be able to turn one or two handles and sweep, but what do we want to sweep for? Do we want to sweep just to see how many things we can get in one evening? My set is calibrated—it might take a fortnight or a month, perhaps, to calibrate for any wavelength from 230 to 600—and I do not want to sweep, but I want as a rule to get at its best some one particular station. I think it is a mistake to try to increase simplicity to such a stage that you can run all round if, by calibrating, you can get better reception, either by way of selectivity or any other means. Therefore, I am to a certain extent against all this simplicity.

Mr. J. Selwyn Jackson: With regard to rectified A.C. for receivers, I have a receiver which uses about 15 milliamps from the A.C. mains through a transformer, and it is remarkable what liberties you can take with the smoothing circuit, so long as you do not use headphones. I have used a smoothing circuit with a 0.005 condenser before the choke, and a very small spark coil as a choke coil, and another 0.005 condenser across the main supply after the spark coil. It is remarkable what small condensers you can use in order to get quite a large degree of silence in a loud-speaker when there is no signal coming through at all. It is a completely different tale, however, if you want to use headphones.

Mr. A. J. Hall: I should like to ask Captain Eckersley if he will explain whether the ease with which he rectifies his A.C. is not due to the fact that it is drawn from a district in which they have no industrial loads of bad power factors? I find that it is practically impossible to work a receiver of any type from the supply with which I am connected with anything up to 5μF and 50 henries of inductance. There is a cinema some little distance away, and things are worse when their motor generators are running. That is just a theory of mine, but I should like Captain Eckersley's views.

Mr. J. A. Whitehouse: No mention has been made of the electrolytic rectifier, but in my experience and the experience of others, that can be made to work in a very satisfactory way. With regard to charging accumulators off D.C. mains, the floating accumulator is apt to give trouble, but if it is connected to the right side of the meter, in the house mains, and a change-over switch arranged from "set" to "charge," it is quite possible to have the accumulator on charge whenever the light is on in the house. So far as H.T. accumulators are concerned, they are quite easy both to make and to work. The trouble with charging those on the main is that they cause a considerable drop in the house lighting, but if arranged with a series parallel switch, in banks, of about 10 volts each, that can be dealt with satisfactorily.

Mr. A. E. Symonds: For two years I have had a broadcast receiver in operation, running totally off the electric light mains, both for lighting the filament and for high tension. I live in a D.C. district, and the hum is really very small. I choke with an ignition coil and 5μF on output side of the ignition coil. The valve filaments are in series, and I supply them with 1 amp, shunting each valve with a resistance to take off the amount I do not want. I use bright emitters for safety, so that I can see the valves. Each valve takes 0.7. It took me some time to find out how to get rid of the hum almost completely. One point is that it was very necessary to connect the earth side of the receiver to a certain point in the filament system. One can connect it to the positive end of the two filaments in series, or to the negative end, and again, it was useful to try putting the resistance, which controls the current from the main, in the positive or the negative end of the system. My arrangement, which gives the minimum hum, is to put the resistance in the positive end of the system, and to have the earth connection from the mid-point, not the terminals of the filament system. In the second valve I had to use grid bias, and even there it was necessary to connect the grid bias to a certain point of the system. Finally, I cut down

Digitized by Google

the hum still more by using low frequency choke-coupled amplification, and a secondary circuit gave improved results on the tuning side of this system. The results are quite satisfactory to those who have listened in.

Captain Eckersley, replying, said: With reference to Mr. Minter's remarks. Nearly all our transmitters are separated by 20 or 30 kilocycles, but it is the foreigner who has erected the transmitters that have created the difficulty of selectivity for reaching out. But the point seems to be to listen to the local station, which is not so much interfered with, because the station is not distant and will be relatively stronger. I did not say that the "Straight Eight" was the only receiver that was any good, but I did say that it was the one which has the greatest number of high frequency stages.

With regard to noise, I do not think the public want a tremendous lot of noise. I think if they listen to a set which gives signals as loud as the gramophone of to-day—a very good standard—they will have nothing to grumble about. Generally speaking, the signals are usually not loud enough, or much too loud. But the point is quality—quality plus loudness.

With regard to carborundum crystals, it is true that a priming cell is required. I agree with Mr. Child that crystals do vary tremendously in quality in accordance with the sort of priming you give them, but I am only dealing with crystal *qua* crystal as a general principle.

With regard to Mr. Kirke, I am not absolutely convinced that he is right on the question of economy in voltage, but no doubt he can show me a page of figures proving that he was right and that I was wrong.

As to Mr. Blake's remarks about the Donle "Sodion" valve, I personally have never met a valve which will amplify but not oscillate. I have not seen the Donle valve.

I agree with Mr. Carpenter that it is a great thing to measure specific quantities. But when one is giving a lecture to a scientific society, it is most embarrassing because to give quantities is to give components. I merely put the circuit forward as a suggestion. I agree also that the speaker who doubted very much whether, if you have two high frequency stages in front of a crystal, there might not be a possibility ot the rectification being wiped out. That is an interesting point, but I have put a lot through crystals that I have had, and they behave well.

On the question of power supply, I am interested to hear of the valve mentioned by Mr. Child. Personally, I use two low impedance valves in parallel on each side of the rectifier, so that I use four valves in all, which is certainly not economical. The transformer will stand 30 or 40 watts.

With regard to using D.C., I agree that, provided conditions are straightforward, it is perfectly simple to do. The difficulty I put up to Mr. Richards is that, when the centre is earthed, it is a difficult connection to get at, and I would suggest that it might be possible to design a small generator, cheaply, which could be put straight on the mains, and which would turn out low tension and high tension.

Mr. Reeves has talked of his supersonic set. It is true that high frequency stages will not "mag" the "hum," and it is possible therefore to use incompletely smoothed current on high frequency. The difficulty arises when you come to the detector and the low frequency stages. My point is that you have to make sets fool-proof if you are to sell them. People have to operate them who do not know the meaning of the word "calibrate." Simplicity is necessary if the set is to be a selling proposition.

We have heard some interesting values for smoothing mains. One speaker suggested two 0.005 condensers. Another suggested half a microfarad. Then it was suggested that very likely trouble was due to the power supply varying in its harmonics. Indeed, I do not think it possible to lay down definite rules. It is, however, remarkably good in my case, and smoothing has been easy.

Mr. Whitehouse asked about the electrolytic rectifier. I know nothing about it.

BOOKS RECEIVED.

VARIATIONS OF APPARENT BEARINGS OF RADIO TRANSMITTING STATIONS.—Radio Research Board Special Report, No. 4, pp. 53.—H.M. Stationery Office, price 2s. 6d.

Under the auspices of the Board a comprehensive investigation into this subject has been carried out by Dr. R. L. Smith-Rose of the National Physical Laboratory and a staff of assistants. Parts I. and II. of the Report have already been published as Special Reports, No. 2 and 3: the report just published forms Part III. The previous reports dealt with long wavelengths, the present report deals with what were then regarded as short wavelengths, viz., 450 to 600 metres; these are of great importance as they are the wavelengths mainly employed for direction finding in marine navigation. It is reassuring to read that the results "are considered to afford valuable evidence as to the reliability of wireless direction finding at all times, and its freedom from errors when employed under the usual conditions demanded for marine navigation." This Report should be carefully studied by everyone interested in direction finding.

BRITISH STANDARD GLOSSARY OF TERMS USED IN ELECTRICAL ENGINEERING.

Issued by the British Engineering Standards Association (Publication No. 205, 1926), pp. 263, comprising Introduction, Glossary divided into sections and sub-sections in accordance with the International Decimal Classification, Symbols for the Quantities and Units Defined, Summary of Sub-sections arranged in the order of the Decimal Classification and General Alphabetical Index.—Published by Crosby, Lockwood & Son, London, price 5s. net, post free 5s. 6d.

Digitized by Google

Abstracts and References.

Compiled by the Radio Research Board and reproduced by arrangement with the Department of Scientific and Industrial Research.

R000.—WIRELESS IN GENERAL.

R008.—DIGESTS OF UNITED STATES PATENTS RELATING TO RADIO TELEGRAPHY AND TELEPHONY.—Issued March 9th, 1926-May 4th, 1926.—John Brady. (*Proc. Inst. Radio Engineers*, June, 1926, pp. 413—421.)

R010.—THE CORRELATION OF SOME RECENT ADVANCES IN WIRELESS.—Dr. Balth van der Pol. (*E.W. & W.E.*, June, 1926, pp. 338—343.)

R040.—RADIO COMMUNICATION. (*Electrical Review*, June 11th, 1926, p. 888.)

Abstract of paper by Mr. Elwell, read before the Royal Society of Arts, dealing with past and present aspects of radio-communication and its future possibilities.

R064 —THE NATIONAL PHYSICAL LABORATORY. (*Electrical Review*, July 2nd, 1926, pp. 39—41.)

An account of the exhibits, including those connected with radio research, on the occasion of the annual inspection by the General Board, June 22nd.

R080.—LA RÈGLE À CALCULS DU RADIO ELECTRICIEN. (*L'Onde Electrique*, May, 1926, pp. 226—228.)

This rule has been constructed so that, in addition to the ordinary operations (multiplication, division, raising to the power of, calculation of logarithms, sines and tangents), the following special operations current in radio practice can be performed :—

1. Resolution of Thomson's formula.
2. Conversion of wavelengths into frequencies and *vice versa*.
3. Resolution of Nagaoka's formula for the calculation of a round or square inductance coil, according to its geometrical data.
4. Calculation of the wavelength of beats.

R082.—ALIGNMENT CHARTS FOR SELECTIVE AMPLIFIERS.—W. A. Barclay. (*E.W. & W.E.*, June, 1926, pp. 344—348.)

R100.—GENERAL PRINCIPLES AND THEORY.

R110.—HARMONICS AND THEIR EFFECT ON WAVE FORM.—J. F. Herd. (*E.W. & W.E.*, July, 1926, pp. 407—410.)

R112.—THE TRANSMISSION OF SIGNALS FROM A HORIZONTAL ANTENNA.—M. Taylor. (*Nature*, June 5th, 1926, p. 791.)

A letter stating that, in the course of a mathematical investigation of the propagation round the earth of electro-magnetic waves from a horizontal antenna, the result has emerged that, when the earth is regarded as a perfect conductor, the components of electric and magnetic force are zero both when the earth is regarded as surrounded by a conducting Heaviside layer and when no layer is present. Finite conductivity of the earth must thus be assumed in order to account for the propagation, and it is then found that the resulting forces are a small vertical electric force and a much larger horizontal magnetic one. The electric force is due to the "space waves," the magnetic force to the "surface waves" described by Sommerfeld (*Annalen der Physik*, 1909, p. 665) : the result of the analysis is in remarkable agreement with the conclusions he there expresses. The magnetic force may be analysed into perpendicular components, each of which consists of two simple harmonic oscillations differing in amplitude and phase, results of the same general type being obtained both with and without the Heaviside layer.

R112.1.—SHORT-WAVE STATION MAKES NEW RECORD. (*Scientific American*, April, 1926, p. 274.)

2GY, an amateur short-wave station in New York, established a new record for low-power transmission by carrying on two-way communication with 9CCQ, Missouri, using only .04 watt power in the plate circuit of the transmitting valve. Both stations employed standard receiving valves and "B" batteries as their power source. This transmission feat represents 25,525 miles per watt.

R113.—DIAGRAMME DES CHAMPS ELECTRIQUES MESURÉS À MEUDON PENDANT LE QUATRIÈME TRIMESTRE, 1925. (*L'Onde Electrique*, May, 1926, pp. 223—226.)

Graphs are shown of the electric field in microvolts per metre of Bordeaux, Nantes, Rocky Point, Rome and Leafield, measured at Meudon during the last quarter of 1925, and also the monthly averages of these stations for the year.

R113.—PROPAGATION OF RADIO WAVES. (*Nature*, July 3rd, 1926, p. 28.)

Abstract of paper read by Dr. Alexanderson to the Academy of Swedish Engineers.

Each new discovery in long or short-wave propagation is eagerly studied for the light that it might throw on the structure of the electromagnetic field, which still remains a mystery.

According to our present knowledge of wave propagation, the waves sent out from a radio station are divided into the earth-bound wave, guided by the proximity of the conducting earth, and the space wave, guided by refraction in the upper atmosphere. Long-wave telegraphy depends mainly upon the earth wave. Short-wave long distance communication depends entirely upon the space wave. Broadcast reception depends upon the earth-bound wave for near stations, and on the space wave for distant stations. It is stated that at a distance of about 100 miles from the station the intensities of the two waves are nearly equal. It has been found that at a distance of ten miles from a 50-metre station the plane of polarisation of the space wave has been twisted by between 20° and 30°, and therefore it follows that at some

Digitized by Google

distance between 60 and 90 miles the twist would be 180°. Thus, since the earth-bound wave maintains its vertical plane of polarisation, the two waves may cancel one another at a distance of about 100 miles. This explains "blind" spots.

As a model of radio transmission, the motion is discussed of a horizontal rubber sheet actuated by a vertical shaft making rotatory oscillations. Straight lines drawn on the rubber sheet will appear to have a wave motion.

Dr. Alexanderson thinks that a harmonious theory requires the proof that the electron is an entity with an aurora reaching from it into infinite space.

R113.1.—Co-operative Investigation of Radio Fading.—J. Dellinger, C. Jolliffe and T. Parkinson. (*Physical Review*, June, 1926, p. 816.)

Abstract of paper presented at April meeting of American Physical Society.

With a view to securing quantitative data on signal intensity fluctuation, the Bureau of Standards invited a number of University and other laboratories to engage in a co-operative programme of fading measurements. This report summarises the progress made in 1925 when five series of simultaneous observations were made on certain specially arranged transmissions from broadcasting stations. The measurements consisted of recording graphically variations of deflection of a galvanometer connected to radio receiving apparatus so as to indicate directly variations in the received field intensity. The measurements yielded data of value on the characteristic radio wave phenomena during a solar eclipse, during the sunset period and the variations throughout the whole diurnal cycle.

R113.4.—Electrical Constitution of the Upper Atmosphere.—T. L. Eckersley. (*Nature*, June 12th, 1926, p. 821.)

The writer has suggested (*Phil. Mag.*, June, 1925) that a certain type of atmospheric, which is semi-musical in nature, owes its character to the dispersive action of the medium, assumed to consist of an assembly of electrons in a rarefied atmosphere. The lowest pitch of the disturbance was shown to depend upon the number of ions per unit volume and called the characteristic frequency of the medium. In some recent tests it was noticed that the prevailing characteristic frequency has risen two or three times in the last eighteen months, suggesting a four to ten-fold increase in the ionic density. Associated with these changes there has been an increase in sunspot activity, magnetic storms and an auroral display so far south as London, and a noticeable falling off of the strength of short-wave signals from America. There seems little doubt that these are all connected with the approach of the period of sunspot maximum in 1928. It appears probable that observations of these musical atmospheric disturbances will provide additional data for determining the electrical constitution of the upper atmosphere.

R113.4.—Pouvoir Inducteur des Gaz et de l'Air Humide (Inductive power of gases and moist air).—Delcelier, Guinchant and Hirsch. (*L'Onde Electrique*, May, 1926, pp. 189—216.)

Present theories on the propagation of radio waves consider atmospheric air as a materially homogeneous medium with the properties of a vacuum, the ions alone producing physical heterogeneity. To establish a more precise theory, the velocity with which the waves are propagated in the gases of the atmosphere must be known. It has been shown (*C.R.*, 1924, p. 32) that variations in composition, pressure, or temperature can *à priori* produce changes in velocity, and consequently changes in direction, as for light waves: a slight variation will produce an even greater effect for radio waves, owing to their much longer path through the atmosphere.

According to Maxwell's theory

$$V = \frac{A}{\sqrt{\mu K}}$$

where V is the velocity of propagation in an insulating homogeneous medium,
A the ratio of the units of quantity of electricity in the electro-magnetic and electro-static systems,
μ the magnetic permeability of the medium, and
K its specific inductive power.

For a vacuum, we have from the definitions of μ and K

$$\mu_0 = K_0 = 1$$

whence $$V_0 = A$$

Very concordant measurements made from 1907 to 1920 give $A = 2.9979.10^{10}$ cms. per sec.

For gases, μ only differs from unity by some ten millionths (air $\mu = 1{\cdot}00000036$), but the inductive power by some ten thousandths (air $K = 1{\cdot}0006$), so that in more accurate measurements this factor has to be taken into account.

The speed of propagation V in air will thus be connected to the speed of propagation V_0 in vacuo by the relation

$$V = \frac{A}{\sqrt{K}} = \frac{V_0}{\sqrt{K}}$$

but V_0/V is the absolute index of the gas,

whence $$\mu = \sqrt{K}$$

The measurement of K will enable the index n to be calculated and consequently the velocity of propagation V.

In this article different ways of determining K are discussed, three methods giving concordant results. For moist air the Hertzian index is greater than that for light. At 15°, air saturated with moisture has a dielectric excess equal to about 1·3 times that of dry air, consequently the presence of water vapour in the atmosphere should considerably diminish the velocity with which electromagnetic waves are propagated in it.

R113.4.—Luminous Night Clouds.—V. Malzev. (*Nature*, July 3rd, 1926, p. 14.)

The interesting feature of these clouds for us is their unchangeable height above the earth's surface of about 82 km. It is stated as well that the tails of meteors are also generally observed at this same height. These facts indicate peculiar properties for the layer occurring at this altitude and provide

Digitized by Google

outside support for the existence of the Heaviside layer to which radio experimenters have assigned just this same height.

R113.8.—A New Theory. The Effect of the Moon on Radio Reception.—D. Shannon. (*E.W. & W.E.*, July, 1926, pp. 429—433.)

R114.—Upper Air Temperatures and Thunderstorms.—J. S. Dines. (*Nature*, June 12th, 1926, p. 822.)

An account of how the daily aeroplane ascents from the R.A.F. station at Duxford have proved the close association between energy and thunderstorms, which is very valuable for the forecasting of thunderstorms.

R114. — High Frequency Rays of Cosmic Origin II. Mountain Peak and Airplane Observations.—R. A. Millikan and R. M. Otis. (*Physical Review*, June, 1926, pp. 645—658.)

When suitable precautions are taken for eliminating the activity of adjacent rocks, both airplane and mountain peak observations agree in showing a definite variation of the penetrating radiation with altitude alone. Within the limits of experimental error all observations are consistent in showing no dependence of the penetrating radiation upon the time of day or upon the position of heavenly bodies.

R114.—Yucatan Blamed for Static. (*Scientific American*, April, 1926, p. 272.)

The crashing and grinding static noise that disturbs radio listeners in the United States originates in the atmosphere of Yucatan and Mexico, according to Dr. Austin of the Bureau of Standards. It is believed that "upside-down" lightning, consisting of a steady discharge of electrical energy from clouds into a conducting layer high above the earth of Central America, is the chief source of static.

R115.—The Cause and Elimination of Night Errors in Radio Direction Finding.—Dr. Smith-Rose and R. H. Barfield. (*E.W. & W.E.*, June, 1926, pp. 367—369.)

R120.—Main Considerations in Antenna Design.—N. Lindenblad and W. Brown. (*Proc. Inst. Radio Engineers*, June, 1926, pp. 291—323.

A general treatment of the complicated problems of antenna design intended to explain how these problems are attacked and also have been to a large extent solved. The reduction of resistance of high-power long-wave antennæ to a value considerably less than one-half ohm has introduced two problems: the limitation of signalling speed and the increased sensitivity of tuning. The lower the resistance and power factor of an antenna, the greater is the effect of its electrical inertia, which opposes rapid signalling. The tuning of an antenna having a power factor of the order of 0·0015 is so sharp that small changes in capacity, due to wind, reduce the antenna current very appreciably. An automatic tuning device has been developed which maintains correct tuning when the changes are not too rapid.

R124 & R125.—Reception Currents from a Loop Antenna.—R. Colwell. (*Physical Review*, June, 1926, p. 816.)

If the oscillations in the four sides of a loop antenna are regarded as made up of the oscillations of a succession of vibrating doublets, an integration around the loop will give the resultant electric vector for any point in space. For the two vertical sides of the loop, the electric intensity takes the form $E\theta = (2I \tan \theta/cr_0)\ (1 - \cos 2\pi h \cos \theta/\lambda r_0)\frac{1}{2}$ $(1 - \cos 2\pi aX/\lambda r_0)\frac{1}{2}$ This equation shows that a loop has a directional effect high up in the air as well as along the ground. If the integration is taken over one vertical and one horizontal side, we have the electric intensity due to a bent antenna. The resulting equation is in the form $E_\theta' = (I_c/r_0)$ $[(A + B \cos \alpha)^2 + (C + D \cos \alpha)^2]^{\frac{1}{2}}$. The $\cos \alpha$ changes sign when the azemuth is 90° in such a way as to give a directive effect to the wave sent out from this antenna; the intensity being greatest for azimuth 180° and least for azimuth 0°.

R132.—Some Notes on Intervalve Couplings. H. L. Kirke. (*E.W. & W.E.*, June, 1926, pp. 350—362.

R132.—A New High Frequency Amplifier Balancing out Inter-Electrode Capacity in Four-Electrode Valves.—Dr. Kröncke. (*Wireless World*, June 9th, 1926, p. 774.)

R132.1.—Low-frequency Inter-valve Transformers. (*Electrician*, 11th June, 1926, p. 59; *E.W. & W.E.*, July, 1926, pp. 435—439.)

Abstracts of a paper by Mr. Willans read before the Institution of Electrical Engineers.

The paper is mainly mathematical and deals with some special aspects of inter-valve transformer design.

R135.—Note sur un Procédé de Modulation des Emetteurs à Lampes.—Capt. Caillat. (*L'Onde Electrique*, May, 1926, pp. 216—219.)

Description of a new method of modulating valve transmitters that combines the following advantages:—

1. No separate battery.
2. Economical use of valves.
3. Greater simplicity and ease of adjustment.
4. Immediately adapted to any transmitter.

The circuit diagram is shown on next page:

The resistance R_1 lowers the potential of the grid and renders it negative and in the absence of oscillation there is no current through R_1. When oscillation starts the grid has an alternating potential of high frequency and the positive alternations cause a current i_1, passing through the resistance in the direction of the arrow. M is a valve heated by the same battery as O, on the grid of which the source of modulation or microphone is made to act through the medium of a transformer or amplifier. The plate of M is joined to the grid of O. When O oscillates, a part of the grid current, i_2, will divide off through M. If the source of modulation is made to operate, the internal resistance of M will alter

Digitized by Google

and the current i_2 will vary in the same manner. Lastly, the potential of the grid of *O* will vary and the waves emitted will be modulated

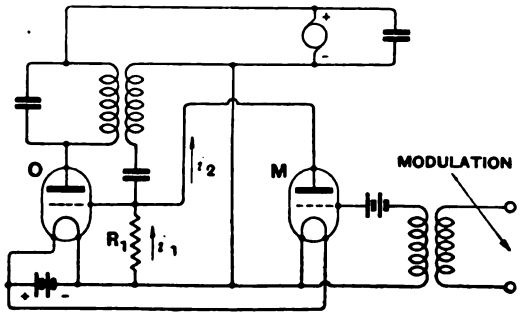

R137.—NOTES ON WIRELESS MATTERS.—L. B. Turner. (*Electrician*, June 11th, 1926, pp. 596—597.)

A discussion of reception in wireless telephony and low-frequency amplification.

In a footnote the writer states that there seems no excuse for the curious but very common custom of referring to the resistance of the anode-filament path as the anode impedance.

In the *Electrician* for June 25th, p. 675, W. H. Date maintains that the custom is reasonable owing to the necessity of distinguishing between V_a/I_a and $\delta V_a/\delta I_a$.

In the *Electrician* for July 2nd, p. 13, J. F. Stanley, while thoroughly agreeing that it is reasonable and in fact imperative to distinguish between these two quantities, thinks it is incorrect and therefore highly undesirable to perpetuate the use of the term impedance to express the quantity $\delta V_a/\delta I_a$. He points out that the value of an impedance is necessarily related to a specific frequency, and unless this frequency is stated or understood, the magnitude of the impedance has no real significance. Now the quantity commonly called anode impedance is quite independent of the frequency. The term proposed therefore is anode A.C. resistance, which has the advantage of conveying the correct meaning as well as distinguishing between the miscalled impedance and the actual anode resistance.

R138.—THE THEORY OF THERMIONICS.—N. Rashevsky. (*Physical Review*, June, 1926, p. 810.)

Abstract of paper presented at April meeting of American Physical Society.

An expression for the free energy of a metal is derived, special account being taken of the fact that thermionic phenomena are essentially surface phenomena. The expression for the free energy thus obtained is substituted in the general formulæ for thermionic emission previously derived. The final formula thus obtained gives indications for the understanding of the fact that while for pure metals the "A" constant of Richardson's equation has almost the universal value postulated by Dushman, it has a largely different value for oxides and absorbed films. The question as to the existence of an electric double-layer on the surface of a metal is discussed, as well as the influence of such a layer on thermionic emission. It is shown that while the existence of such a layer follows from Schottky's "Equilibrium Theorems," the same theorems lead to the conclusion that the temperature change of the moment of such a layer is relatively small. Its value may be approximately estimated.

R138.—THE ABSORPTION OF CALCIUM ON TUNGSTEN AND OXIDISED TUNGSTEN. — J. Becker. (*Physical Review*, June, 1926, p. 811.)

R139.—THE PENTATRON.—Dr. Kröncke. (*Wireless World*, June 23rd, 1926, p. 854.)

Description of a new five-electrode receiving valve.

R139.—MEASUREMENT OF ELECTRONIC CHARGE BY SHOT EFFECT IN APERIODIC CIRCUITS.—N. Williams and H. Vincent. (*Physical Review*, June, 1926, p. 810.)

R139.—EXPERIMENTS ON CATHODE SPUTTERING.—E. O. Hulburt. (*Physical Review*, June, 1926, p. 805.)

R144.—HIGH-FREQUENCY RESISTANCE.—S. Butterworth. (*Wireless World*, June 9th, 1926, pp. 767—768.)

The case for low-loss coils in tuned anode circuits.

R144.—EFFECTIVE RESISTANCE OF INDUCTANCE COILS AT RADIO FREQUENCY.—PART III.—S. Butterworth. (*E.W. & W.E.*, July, 1926, pp. 417—424.

R148.—THE USE OF A CATHODE-RAY TUBE FOR THE TRANSMISSION OF SPEECH.—C. W. van der Merwe. (*Physical Review*, June, 1926, p. 805.)

R149.—A NEW TYPE OF CONTACT RECTIFIER.—L. Gvondahl. (*Physical Review*, June, 1926, p. 813.)

A piece of copper with a layer of copper oxide formed on it at a high temperature is an unsymmetrical conductor of electricity. Ratios between high resistance and low resistance as high as 20,000 have been obtained.

R162.—SELECTIVITY PAR EXCELLENCE.—The Staff of the Radio News Laboratories. (*Radio News*, May, 1926, pp. 1552—1555.)

An account of broadcast reception employing the phenomena of closely-coupled circuits.

R200.—MEASUREMENTS AND STANDARDS.

R230.—THE INDUCTANCE OF A HELIX MADE WITH WIRE OF ANY SECTION.—C. Snow. (*Physical Review*, June, 1926, p. 815.)

Abstract of paper presented at April meeting of American Physical Society.

A formula is derived for the inductance of a single layer helix for use in absolute measurements of precision. Account is taken of the helical nature of the winding and hence of the axial component of current in it. For windings of ordinary dimensions a precision is claimed of at least one part in a million.

Digitized by Google

R240.—On the Calculation and Application of High Resistances of small Self-Inductance for all Frequencies.—R. Wilmotte. (*Philosophical Magazine*, July, 1926, pp. 65—86.

In many accurate measurements it is necessary to know the exact phase angle of high resistances of the order of several thousand ohms, when capacity effects are often very large. In this paper formulæ are given for the self-inductance of high resistances formed by long parallel wires of circular cross-section and screened from earth by a cylindrical metal shield. The formulæ for the use of such a standard as a ratio arm and potential divider are also given, together with its application in bridges.

R240.—The Resistance of Condensers at Radio Frequency.—R. Ramsey. (*Physical Review*, June, 1926, p. 815.)

For the measurement a "differential thermometer" was employed, made of two 800 cc. pyrex glass beakers inverted on and sealed to two glass plates. The radio condenser was placed in one of the beakers and connected through the glass plate into a radio-frequency circuit. Into the second beaker an exactly similar condenser was placed and a resistance wire was connected through the plate to a D.C. circuit. Assuming both beakers are exactly alike thermally when the pressures indicated are the same, we have I^2R in the high-frequency side equal to i^2r in the D.C. side.

R240.—Some Notes on High Ohmic Resistances.—Dr. H. Kröncke. (*Wireless World*, June 30th, 1926, pp. 892—893.

R240.—Inductance Coils Quantitatively Compared. Part II.—A. L. M. Sowerby. (*E.W. & W.E.*, June, 1926, pp. 363—366.)

R270.—Portable Receiving Sets for Measuring Field Strengths at Broadcasting Frequencies.—A. Jensen. (*Proc. Inst. Radio Engineers*, June, 1926, pp. 333—344.)

Description of an improved form of measurement set for use in the field, recently developed in the Bell Telephone Laboratories, which is now being used by the American Telephone and Telegraph Co. for field strength surveys, etc. A schematic diagram is given.

R271.—Comparison of Signal Strength.—P. Tyers. (*Wireless World*, June 23rd, 1926, p. 842.)

A development of the shunted telephone method.

R281.—Dielectric Absorption and Theories of Dielectric Behaviour (Abridged).—J. W. Whitehead. (*Journ. Amer. Inst. Elect. Engineers*, June, 1926, pp. 515—524.)

R300.—APPARATUS AND EQUIPMENT.

R329.—Receiver for Short Waves. (*Radio-electricité*, June 10th, 1926, p. 213.)

Abstract of an article in *Der deutsche Rundfunk* (March 28th, 1926, p. 871) describing a receiver developed by Riechers with a pencil of ultra-violet rays for antenna. The rays are produced by a special projector and are said to give excellent results as antenna, particularly when guided in given directions.

R331.—Reactivation of Radio Tubes. (*Electrical World*, May 15th, 1926, p. 1,066.)

The General Electric Co. has found out that thoriated tungsten filaments can be rejuvenated. The process essentially consists in operating the filament for a very brief interval at a specified high voltage (called "flashing"), followed by a lower voltage for a longer time (called "ageing"), all with no grid or plate voltage. The flashing reduces some of the thorium oxide in the wire to thorium and the ageing forms the required surface layer.

R340.—Sources of "A," "B" and "C" Power for Radio Receivers.—W. Holland. (*Proc. Inst. Radio Engineers*, June, 1926, pp. 345—372.)

A paper describing the characteristics of the various present-day sources of "A," "B" and "C" power for radio receivers, namely, storage batteries, dry primary batteries, trickle-charge power units and battery substitute devices.

The development of radio storage batteries is traced from the earliest types up to the highly-specialised radio "A" and "B" batteries of to-day, having built-in charge indicators, visible water level and spray-proof construction, and information is given on "A" socket power units containing such batteries in combination with newly-developed trickle chargers.

A perfected aluminium electrolytic rectifier is announced, and "B" battery substitutes embodying this rectifier are described and their electrical characteristics given. Rectifiers and smoothing filters generally are discussed and their application to radio uses.

R342.—Battery Eliminators: Rectified A.C. as a substitute for L.T. Batteries.—F. H. Haynes. (*Wireless World*, July 7th, 1926, pp. 2—3.)

R344.—An Oscillator without Battery or Transformer.—A. T. Hanscom. (*Q.S.T.*, June, 1926, pp. 43—44.)

Description of a convenient portable oscillator for laboratory work and receiver testing, which can be operated from 110 volts A.C. without using any battery.

R344.9.—Piezo-Electric Quartz Oscillators coated with Metallic Films.—E. O. Hulburt. (*Physical Review*, June, 1926, p. 814.

Recent experiments have demonstrated that a quartz piezo-electric crystal with the sides coated with films of platinum, copper, or other metals may be used in a suitable valve circuit as a generator of sustained oscillations. The natural frequency of the crystal is but slightly changed by the addition of the metallic film. W. G. Cady has shown that a piezo-electric crystal coated with chemically deposited silver will serve as a resonator in a radio-frequency circuit: its use as an oscillator however seems to have been unsuspected, previous experience in fact suggesting that a metallic film adhering to the crystal would destroy its oscillating properties, just as an oil film is known to do.

R344.9.—A Multi-Stage Crystal-Controlled Transmitter.—J. Wells and E. Tillyer. (*Q.S.T.*, June, 1926, pp. 29—32.

Digitized by Google

The authors explain the construction and adjustment of a crystal-controlled transmitter in which a thick crystal is used to control a low-power tube. Amplification is effected through two low power stages operating on harmonics of the crystal oscillator. Such a transmitter avoids several difficulties which may be experienced when using a relatively thin crystal and amplifier stages operating at the crystal frequency.

R376.3.—A REMARKABLE LOUD-SPEAKER.—Dr. Eugen Nesper. (*Radio News*, June, 1926, p. 643.

Description of a Reisz loud-speaker employing a new principle in the actuation of its diaphragm—which is made of indiarubber covered with electrified carbon grains.

R377.—ADDITIONAL APPLICATIONS OF THE MAGNETIC DRUM PRINCIPLE.—Dr. McLachlan. (*Journ. Inst. Elect. Engineers*, June, 1926, pp. 671—682.)

A description is given of a new form of siphon recorder, with a very small transit time, for high speed reception on commercial circuits (beam stations). Legible tape records are secured when atmospheric disturbances are neither too severe nor too frequent. Other applications of the magnetic drum principle to a delayed-action relay and the checking of clocks by wireless signals are described. The valve circuits associated with the various devices are discussed and shown diagrammatically.

R380.—TUBES WITHIN TUBES.—G. Rowe. (*Radio News*, July, 1926, pp. 30—31.)

Description of a new type of vacuum tube developed by Dr. Siegmund Loewe of Berlin. This new tube incorporates within itself almost a complete radio set, including detector and amplifier elements, resistances and condensers; the variable condenser and inductance alone remaining outside. In this way the length of the leads is reduced to a minimum, eliminating undesirable capacities, also moisture and air are kept away from sensitive parts. Great things are predicted for this tube. Illustrations are shown.

R384.6.—THE MULTI-RANGE AMMETER OF CONSTANT RESISTANCE.—L. Sims and M. Heywood Hunt. (*E.W. & W.E.*, July, 1926, pp. 425—428.)

R400.—SYSTEMS OF WORKING.

R430.—LE SECRET EN RADIOTÉLÉGRAPHIE (Secrecy in radio telegraphy.)—Général Cartier. (*Radioelectricité*, April 25th, 1926, pp. 142—144.)

Detailed explanation of the Vernam system, which was employed by the American army during the war.

R500.—APPLICATIONS AND USES.

R520.—WIRELESS WITH THE BYRD ARCTIC EXPEDITION.—R. Bloxam. (*Wireless World*, June 9th, 1926, pp. 771—772.)

R520.—WIRELESS BEARINGS FROM THE AIR. (*Wireless World*, June 30th, 1926, pp. 866—868.)

R530.—TURKEY—FRENCH RADIO COMPANY. (*Electrical Review*, July 2nd, 1926, p. 21.)

The Compagnie Générale de Telegraphie Sans Fil has concluded a contract with the Turkish Government for the erection of radio stations of 15kW in Angora and Constantinople, the latter being equipped with automatic receiving and transmitting apparatus.

R555.—A.R.R.L. STANDARD FREQUENCY STATION 1XM.—K. Lansingh. (*Q.S.T.*, June, 1926, pp. 45—48.)

Illustrated description of the experimental station of the Radio Society of the Massachusetts Institution of Technology. The Armstrong circuit is employed for the standard frequency transmitter, the valve being generally operated at from 200 to 300 watts input.

R557.—INDIA: NEW COMPANY. (*Electrical Review*, June 11th, 1926, p. 874.)

Prominent Bombay business men have floated the Indian Broadcasting Co., Ltd., with a capital of £112,500 in 10-rupee shares. Stations will be built at Calcutta and Bombay which, it is anticipated, will be ready to transmit programmes next December.

R557.—JAPAN: NEW OSAKA STATION. (*Electrical Review*, June 4th, 1926, p. 837.)

Work has begun on a site in Otemae, where the Osaka Radio Broadcasting Bureau is to build its main station. The site covers 754 tsubo and the plan is to build a three-storeyed ferro-concrete structure with three radio rooms, the first intended for foreign music, the second for Japanese music, and the third for lectures, with a battery room to make broadcasting possible should the supply of electricity fail. The height of the antennæ will be 250 feet, and the construction is expected to be complete before the end of the year.

R557.—SWEDEN: NEW STATION. (*Electrical Review*, June 4th, 1926, p. 837.)

The Swedish Telegraph Board has concluded a contract with Marconi's Wireless Telegraph Co., Ltd., regarding the delivery of transmitting apparatus for Sweden's first large broadcasting station. The equipment will be similar to that at the English station at Daventry.

R557.—PERSIA. (*Radio-electricité*, June 10th, 1926, p. 210.

The Government of Persia intends erecting very shortly a system of broadcasting stations comprising a powerful station at Teheran and six stations of smaller range distributed over the State. The stations will be under the control of the Minister of War.

R570.—THE AIR SERVICE RADIO LABORATORIES.—Lieut. Breckel. (*Radio News*, July, 1926, pp. 12, 13, 68 and 70.)

Experiments with radio-controlled air-planes are described together with the radio beacon for air-planes, carried out in Ohio.

Digitized by Google

R581.—FORESEES BROADCASTING OF HEAT. (*Scientific American*, April, 1926, p. 272.)

Broadcasting of heat by radio is predicted when instruments to control heat waves are discovered; principally a detector that will intercept, hold and amplify the waves. Professor Dibble, of the Carnegie Institute of Technology, says that the transmission of heat is essential because of the gradual exhaustion of the elements of fuel. "The day is not far off, in my opinion, when we shall see huge centralised heating plants broadcasting heat to homes, industries, and office buildings. Our hope is to incline the activity of research men towards this objective."

R582.—FUNKBILD-ÜBERTRAGUNG IM AUSCHLUSS AN RUNDFUNK-GERÄT (Radio picture transmission attached to broadcast apparatus).—M. Dieckmann. (*Elektrische Nachrichten-Technik*, June, 1926, pp. 201—208.)

Particulars are given of a simple system for reproducing pictures in rough outline. Illustrations are shown.

R582. — HIGH-SPEED PHOTOTELEGRAPHY. — P. Gordon Fischel. (*Wireless World*, June 9th, 1926, pp. 777—779.)

Account of the system developed by the Telefunken Company and Dr. Karolus of Leipzig.

R586.—THE LATEST ADVANCE TOWARD TELEVISION. —L. FOURNIER. (*Radio News*, July, 1926, pp. 36, 37 and 84.)

An account of Professor Belin's apparatus which will cover ten complete images in one second, and so receive and reproduce a moving scene with continuity of action.

R586.—THE BAIRD TELEVISOR SYSTEM. (*Electrician*, June 25th, 1926, p. 672.)

Some particulars are given of Mr. Baird's invention which has been taken over by the company, Television, Ltd. It is stated that while artificial light is used at present, there is nothing to prevent the use of ordinary daylight, and that when certain refinements have been made, outdoor scenes will be able to be transmitted.

R600.—STATIONS: DESIGN, OPERATION AND MANAGEMENT.

R611.—THE RUGBY RADIO STATION OF THE BRITISH POST OFFICE.—E. Shaughnessy. (*Journ. Inst. Elect. Engineers*, June, 1926, pp. 683—713.)

The full text of the paper read before the Wireless Section, 14th April, together with the illustrations shown and the discussion that followed. Abstracts have appeared in most wireless journals.

R611.—BRAZIL —NEW STATION. (*Electrical Review*, June 18th, 1926, p. 917.)

The new high-power wireless telegraph station at Rio de Janeiro, which was opened recently by the Brazilian Minister of Communications, has been equipped with a 20,000 metre-ampere valve transmitter by the Marconi Telegraph Co. The station is being used for communication with Europe, Africa, Australia, North America, and the other countries of South America.

R615.12.—TRANSATLANTIC TELEPHONY TESTS.—A. Dinsdale. (*Wireless World*, June 16th, 1926, pp. 792—797.)

Description of the apparatus and methods employed at the American end of the circuit.

R615-12. — TRANSATLANTIC TELEPHONY. — A. Oswald and El Deloraine. (*Electrician*, June, 4th and 25th, pp. 572 and 666.)

Description of the telephony system at the Rugby station, including the single side-band equipment and power amplifier, the speech current apparatus, protective and testing measures, shielding arrangements and the control system.

R616.5. — GERMANY'S HIGH-POWER BROADCAST STATION: KÖNIGSWUSTERHAUSEN, BERLIN. —Prof. Howe. (*E.W. & W.E.*, July, 1926, pp. 411—415.)

R621.4.—CHOICE OF POWER FOR A RADIO STATION. —N. Tsiklinsky and V. Volynkin. (*Proc. Inst. Radio Engineers*, June, 1926, pp. 381—389.)

A paper presented before the Russian Society of Radio Engineers, Leningrad, attempting to define that power of a radio station for which the desired service can be secured with the minimum outlay for installation and maintenance.

The cost of a radio station may be looked upon as the combined value of the buildings, the generating machinery, and the antenna with its masts and ground connection. It is here shown that, for a given transmission, the necessary power P in the antenna and its effective height h are connected by the equation $P = a + bh^2$. By this formula the cost of the antenna and masts, as a function of their dimensions, may be expressed as a function of the power: hence all the curves of cost may be combined graphically. The resulting curve of total cost clearly shows that there is some power for which the cost of a radio transmitter is a minimum. It is also shown how the power should be chosen to give the smallest annual expense.

The methods described are illustrated by determining the power in the antenna and height of the masts for a station with a range of 3,000km., operating on an optimum wavelength of 5,070m. Here the power for the least outlay works out to 30kW and for the lowest annual expense to 20kW.

R800.—NON-WIRELESS SUBJECTS.

538.—AUFNAHME VON MAGNETISIERUNGSKURVEN MIT DER BRAUNSCHEN RÖHRE (Tracing magnetisation curves with the Braun tube.—K. Krüger and H. Plendl. (*Zeitschrift für Hochfrequenztechnik*, 27, 5, pp. 155—161.)

539.—VELOCITY DISTRIBUTION AMONG THERMIONIC ELECTRONS IN VACUUM AND IN HYDROGEN ATMOSPHERE.—C. Del Rosario. (*Physical Review*, June, 1926, p. 810.)

The distribution of velocities among the electrons was found to follow Maxwell's law—contrary to the experience of other observers.

Digitized by Google

539.—PROBABILITY OF IONIZATION OF GAS MOLECULES BY ELECTRON IMPACTS—II.: CRITIQUE.—K. Compton and C. van Voorhis. (*Physical Review*, June, 1926, pp. 724—731.)

539.—COLLISIONS BETWEEN ELECTRONS AND GAS MOLECULES.—I. Langmuir and H. Jones. (*Physical Review*, June, 1926, p. 806.)

539.—THE COMPTON SCATTERING AND THE STRUCTURE OF RADIATION.—T. L. Eckersley. (*Philosophical Magazine*, July, 1926, pp. 267—287.)

539.—VARIATION WITH PRESSURE OF THE RESIDUAL IONIZATION IN GASES.—W. Merryman. (*Physical Review*, June, 1926, pp. 659—671.)

621-313-3.—FUR ERMITTLUNG DES ZEITLICHEN VERLAUFES VON WECHSELSTRÖMEN MIT HILFE DER BRAUNSCHEN RÖHRE (Determining the wave-shape of alternating currents by means of the Braun tube).—H. Plendl. (*Zeitschrift für Hochfrequenztechnik*, 27, 5, pp. 153—155.)

Esperanto Section.

Abstracts of the Technical Articles in our last Issue.

Esperanto-Sekcio.

Resumoj de la Teknikaj Artikoloj en nia lasta Numero.

R000.—RADIO ĜENERALE.

R050.—RESUMOJ KAJ ALUDOJ.

Kompilita de la *Radio Research Board* (Radio-Esplorada Komitato), kaj publikigita laŭ aranĝo kun la Brita Registara Fako de Scienca kaj Industria Esplorado.

R100.—ĜENERALAJ PRINCIPOJ KAJ TEORIO.

R110.—HARMONIKOJ KAJ ILIAJ EFIKOJ ĈE LA ONDA FORMO.

La artikolo ilustras grafike la efikojn de harmonikoj je l'onda formo, ekz., de oscilo. Komence traktita estas simpla sinusa kurvo; poste ilustrita estas la aldono de dua harmoniko de varianta amplitudo kaj fazo, kaj montrita la rezultanta modifiĝo de onda formo. Aliaj harmonikoj estas simile traktitaj, kaj la ĝenerala efiko de paraj kaj neparaj harmonikoj diskutitaj.

La artikolo finiĝas per ilustrado de kelkaj bone konataj serioj "Fourier"aj, kompilitaj laŭ terminoj difinitaj, kaj montras ankaŭ la formon je kiu la onda formo fine alproksimiĝas.

R113.8.—NOVA TEORIO. La Efiko de la Luno je Radio-Ricevado.—Derek Shannon.

La aŭtoro rimarkis, ke sendoj el malproksimaj (ekz., Amerikaj) stacioj riceviĝas plibone dum lunlumaj noktoj, kaj sugestas, ke la rotacio de la luno ĉirkaŭ la teron influas tiajn sendojn. Ilustrita estas cirkvito per kio oni faris mezurojn koncerne la stacion KDKA, kaj oni publikigas du kurvojn de rezultoj, kiuj montras grandan plifortiĝon de signaloj dum la plena luno, kaj malfortiĝon dum la luno malpliiĝas. Oni urĝigas la neceson de pli kompleta esplorado pri la luna influo.

R131.—UZADO DE PLAT-KURENTAJ—PLAT-TENSIAJ KARAKTERIZOJ DUM STUDADO PRI LA FUNKCIADO DE VALVAJ CIRKVITOJ.—E. Green.

La artikolo montras ke, je multaj okazoj, estas preferinde, revuante la konduton de valvaj cirkvitoj, konsideri la karakterizojn de anoda kurento rilate al anoda tensio (je konstantaj kradvoltoj). Post konsiderado pri la karakteriza familio, diskutitaj estas la konduto de kelkaj malsamaj tipoj de anoda cirkvito, sub la apliko de sinusoida voltkvanto. La ekzemploj pritraktitaj estas pura rezisteco, reaktanco indukta aŭ kapacita, rezisteco kaj reaktanco laŭserie, rezisteco kaj reaktanco laŭparalele aranĝitaj, k.t.p. La klarigo estas bone ilustrita per diagramoj. La nuna parto finiĝas per diskutado pri maksimuma elmeto, kaj efikeco por diversaj tipoj de praktikaj cirkvitoj.

R132.1.—MALALTFREKVENCAJ INTERVALVAJ TRANSFORMATOROJ.—Resumo de Referato legita de S-ro. P. W. Willans, M.A., antaŭ la Senfadena Fako de la Institucio de Elektraj Inĝenieroj, je la 2a Junio 1926a.

La referato detale konsideras la malaltfrekvencan intervalvan transformatoron. Unue diskutitaj estas teoriaj konsideroj, kaj resumitaj iliaj efikoj je transformatora funkciado. Poste priskribita estas metodo de eksperimenta mezurado, kaj la rezultoj ilustritaj kaj diskutitaj.

La aplikado de teorio kaj eksperimento al transformatora desegnado estas poste pritraktita, kun aparta aludo al komerca modelo de transformatoro evoluigita de la aŭtoro.

En la lasta parto de la referato presitaj estas notoj pri diversaj metodoj konekti la transformatoron, speciale kun celo havigi pligrandigitan skalon de unuforma amplifado. Ankaŭ aperas raporto pri la diskutado kiu sekvis la legadon de la referato.

Digitized by Google

R144.—Efektiva Rezisteco de Induktancaj Bobenoj je Alta Frekvenco.—Parto IIIa. S. Butterworth.

Parto Ia aperis en la Aprila numero, Parto IIa en Majo, kaj ambaŭ el ili estis resumitaj en ĉi tiu sekcio, en la Junia numero.

La nuna parto aplikas la argumenton, antaŭe disvolvitan, al multtavolaj bobenoj de malgranda profundeco por vindado, kaj al tiaj bobenoj de limita profundeco por vindado. Por faciligi kalkuladon, oni presigis tabelojn kaj kurvojn. Provajn rezultojn oni montras de komparoj inter kalkulitaj kaj mezuritaj valoroj. Ĉi tiuj montras, ke la kupra perdo estas 0.77 ĝis 0.92 de la tuta perdo. La desegno de induktancaj bobenoj por minimumaj kupraj perdoj estas poste diskutitaj. Post traktado pri ĝeneralaj principoj, la diskutado dividiĝas laŭjene: (1) Desegno por citita volumeno de kupro, (2) Desegno por konstanta longo de fadeno, (3) Desegno por konstanta supertuta surfaco. Esprimoj por la kalkulado de induktanco kaj rezisteco estas donitaj, kun tabeloj. La artikolo finiĝas per mallonga komparo de grandaj kaj malgrandaj bobenoj, kaj per noto pri eksperimentaj mezuroj de S-ro. A. L. M. Sowerby, resumitaj en ĉi tiu fako en la Julia numero.

R300.—APARATO KAJ EKIPAĴO.

R355.077.5.—Akiro de Anoda Kurento per la Elektraj Ĉeftuboj.

Mallonga artikolo traktanta aparte pri la konduko al tero de meza aŭ neŭtrala konduktoro, kaj emfaziganta, ke ĉi tiu konduktoro devus esti kondukita al tero ĉe la genera stacio, sub-stacio, aŭ transformatoro, kaj ne ĉe la instalaĵo de la konsumanto.

R384.6.—Konstruado de Mem-Enhava aŭ Aperioda Punkta Galvanometro.—F. A. Boyce.

Priskribo pri konstruado de malmultekosta punkta galvanometro posendanta la jenajn trajtojn: (1) Mem-enhava, la punkta lumo estante konstante fokusita al smirgita vitra skreno, kiu estas parto de la ŝranko mem, (2) Balistika aŭ aperioda, la ŝanĝo estante farita per komutatoro sur la borna panelo. (3) Simpla konstruo.

La instrumento estas movbobena modelo, kaj konstruaj detaloj kaj diagramoj estas publikigitaj por fabriki aŭ akiri la diversajn partojn. La aperioda komutatoro enkondukas eksteran ŝarĝon de ne-indukta rezistanco, kiu tuj amortizas osciladon de la bobeno. La lampo estas $4\frac{1}{2}$-volta, simila al tiu uzata kiel poŝlampo. Generalaj notoj pri l'uzado de l'instrumento ankaŭ aperas.

R384.6.—La Mult-Skala Ampermetro de Konstanta Rezisteco.—L. G. A. Sims & M. Heywood Hunt.

La artikolo diskutas aranĝojn por certigi, ke la kombinita rezisteco de ampermetro kaj ŝunto estu ĉiam la sama kiel tiu de l'instrumento kiam uzita sole. Diskutinte la ĝeneralajn principojn pri ŝuntigo de tia instrumento kaj pri aldono de kompensa seria rezistanco, la aŭtoroj montras kiel, per aranĝo de taŭgaj konektigaj punktoj sur la rezistanco, porcio de ŝunta rezistanco, kiu estas elŝuntigita, povas esti aldonita al la efektiva seria cirkvito. La kompensado ne estas absolute preciza, sed la eraro estas malgrandega, dum multa simpliĝo efektiviĝas. Oni citas esprimojn por la seriaj kaj ŝuntaj valoroj, kaj tabelo montras ilian aplikon al altrezisteca kaj al malaltrezisteca instrumento, montranta ankaŭ la procentan eraron pere de ideala okazo de konstanta rezisteco.

R500.—APLIKOJ KAJ UZOJ.

R540.07.—Senfadenaj Antenoj kaj la Dom-Luiganto.

Mallonga artikolo de advokato, revuanta la kondiĉojn sub kiuj antenoj aŭ aliaj senfadenaj objektoj povas esti fiksitaj al konstruaĵoj okupitaj de luantoj.

R600.—STACIOJ: DESEGNO, FUNKCIADO KAJ ADMINISTRADO.

R616.5.—La Germana Altpotenca Brodkasta Stacio.—Prof. G. W. O. Howe.

Priskribo pri la Germana altpotenca brodkasta stacio ĉe Königswusterhausen. Estas tri apartaj sendiloj, unu 14-kilovata kaj du 7-kilovataj, ĉi tiuj potencoj estante liveritaj al la valvoj sen modulado. La priskribo traktas pli precize pri la unue aludita sendilo. La provizo de anoda potenco estas per transformatoro el 500-cikla alternkurenta generatoro je 220 voltoj. La sendilo konsistas el kvar partoj: (1) Sendependa oscilatoro, (2) Rektifikatoroj kaj altpotencaj valvoj, (3) Meza cirkvito ĉe anodo de altpotencaj valvoj, (4) Antena agorda bobeno. Modulado estas efektivigita per patentita metodo Telefunken'a, ĉe kiu la kutima krada rezistanco estas anstataŭigita de la variebla rezistanco de la modulaj valvoj, kies rezisteco dependas de la krada tensio, kiu, siavice, estas regita de la amplifita mikrofona kurento. Fotografaĵoj de l'stacio kaj de diversaj eroj de ĝia aparataro kaj ekipaĵoj estas presitaj.

R800.—NE-RADIAJ TEMOJ.

510.—Matematiko por Senfadenaj Amatoroj.—F. M. Colebrook.

Daŭrigo de la serio komencita en la Maja numero. Pritraktitaj estas algebraj multiplikoj, la multipliko de numero-grupoj, nulo en la multipliko, dissolvo je faktoroj, la fizika aplikado de multipliko, k.t.p.

Digitized by Google

Correspondence.

Letters of interest to experimenters are always welcome. In publishing such communications the Editors do not necessarily endorse any technical or general statements which they may contain.

A New Theory.

To the Editor, E.W. & W.E.

SIR,—The method of measurement used in the article entitled "A New Theory" is very interesting. I have been making measurements with methods similar to this, and would suggest the insertion of a large condenser (2μF) from the H.T. side of coil L_3 to L.T.—. It is important to keep the load in the anode circuit as constant as possible, otherwise small alterations in H.T. resistance, etc., may give variable results. The first valve is really a form of Moullin voltmeter using grid rectification.

Great stress appears to be laid on the supersensitivity of the galvanometer. This galvanometer has to be shunted to pass the anode current and it is not clear to me why a less sensitive galvanometer should not be used giving full deflection for, say, 200 or 300 microamps. I believe the Cambridge Instrument Co. can supply pivoted instruments to read as low as this without the trouble of a mirror suspended type. It is only fair to add that I have used an ex-Government micro-volt-ammeter as mentioned with very satisfactory results, but this instrument is unnecessarily sensitive.

Methods of measurements such as this could be used more extensively by experimenters and are well worth while. I have also noticed a connection between signal strength and tides.

E. A. ANSON (Capt.) 2OA.

The Valley, Narberth,
Pembrokeshire.

Fading.

To the Editor, E.W. & W.E.

SIR,—As suggested by Mr. W. H. Maddison in a letter published in the June issue, any effect of cloud on reception phenomena should be taken into account. It is not so certain, however, that, as he says, the conductivity of a cloud is far greater than that of ionised air. Indeed, experiments carried out by the writer so far have shown the reverse to be the case.

For a homogenous medium to be conductive the ions (including isolated electrons, if any) must be capable of free movement along a line of potential gradient. Now a cloud or fog is not homogenous. It consists of discrete particles of water dispersed throughout a bulk of air. These particles are condensed around solid or ionic nuclei, thus imprisoning and hampering the movements of those ions which would otherwise render the medium a conductor. True, the aqueous particles possess a small electric charge, either by virtue of the occluded ions and by any other charged matter which may be adsorbed by them, or by other means, and so a general but slow drift may occur in a negative or positive direction. This results in a much smaller conduction than might be expected.

A parallel case may be instanced. Some years ago the writer had occasion to measure the conductivities of dry and moist solutions of hydrochloric acid gas in toluene. It was rather surprising to observe that the moist solutions showed lower conductivities than the dry. The explanation was that the particles of water dissolved out the HCl forming a fine cloud of minute globules dispersed throughout the non-conducting toluene.

If Mr. Maddison has any data it would be most interesting.

Harrogate. A. WOODMANSEY (6LU).

SIR,—I share entirely the ideas of Mr. W. H. Maddison, g2BOX; one seems ever fascinated by the Heaviside layer theory, and does not look enough into atmospheric disturbances.

As a matter of observation, I can assure you that clouds have a great effect on the production of fading. I conducted tests here with a Belgian friend. As a rule, my signals were quoted *r*7 on his receiver, but when the weather was cloudy, and clouds passing just over my house, my signals dropped *in each case* to *r*5 or *r*4. This "law" has never been found wrong here. I may add that frosty nights give no fading effect, and that foggy days seem to have no effect on radio signals.

Paris. HENRY PIRAUX (f8PY).

SIR,—I have been greatly interested in recent articles and correspondence *re* "Fading," and I beg to state that, judging from my own observations which have been purely aural, I feel that there is something worthy of consideration in the remarks attributed to the old lady who hesitated to buy a broadcast receiver because she thought that as so many aerials were popping up, there would not be sufficient energy to go round.

Many DX listeners are aware that the proximity of other receivers, each tuned to the same distant station, produces serious changes of signal strength more especially when they are in a direct line between the desired station and the point of observation. Perhaps it would not be unreasonable to suppose that although the effect would be inversely proportional to the square of the distance between the observer and the interfering receivers, it would, nevertheless, be a factor which cannot totally be ignored when one considers that there may be some hundreds of receivers in the direct line, each swinging through the band of frequencies round about the particular one under observation.

I am not suggesting that fading is likely to be non-existent were there no interfering receivers, but I am of the opinion that this effect does seem to complicate matters to observers in crowded districts, and would possibly give rise to the irregularity in fading.

Highbury. WILFRED GARTLAND (G2GP).

Digitized by Google

Inductance Coils Quantitatively Compared.

To the Editor, E.W.& W.E.

SIR,—With reference to Mr. P. K. Turner's letter, published in *E.W.& E.W.* for July, I feel it is necessary for me to take arms in my own defence.

Mr. Turner has evidently realised that Part I. of my article was simply a repetition of Mr. Reyner's work, made in order to check his rather astonishing conclusions, and Mr. Turner has therefore restricted his criticisms to Part II.

He deprecates, for example, the "simultaneous change of several variables"—and then proceeds to suggest another set of measurements, also involving simultaneous changes in several variables. The truth is, of course, that it is utterly impossible to change only one variable at a time—and I am not sure that I prefer Mr. Turner's selection of simultaneously changing variables to my own. The same difficulty occurs in Mr. Butterworth's mathematical work, and the sets of simultaneous variables that he has chosen are different again, as he points out in the courteous note at the end of his July instalment.

Actually, my own selection was made in such a manner that the variable under consideration should have the preponderating influence in varying the resistance, which would not be the case in getting experimental figures for the effect of D/l ratio in the manner suggested by Mr. Turner.

Mr. Turner's remarks on the probable inaccuracies of the method that I adopted are just enough in essence, though heavily exaggerated in numerical value.

In the first place, it is necessary to state that at the time when the measurements were made, I was living in extremely cramped temporary quarters, and had no chance whatever either of making up or using anything like decent measuring apparatus, and I had to do the best I could under the circumstances. Now I have a home, and the deficiencies, with the sterling aid of *E.W.& W.E.*, are being rapidly made good.

It is obviously impossible for me now to measure the resistance of the actual aerial used in the measurements published, but I have rigged up a pretty close duplicate, and its resistance, measured by the resistance variation method, comes out at about 11 ohms at 380 metres, which is far below Mr. Turner's suggested figure.

In making his remarks about the probable large variation in the self-capacity of the coils, Mr. Turner has quite evidently overlooked the fact that all the coils were solenoids, and would therefore have a pretty low self-capacity, with but small variations from coil to coil. To check the point, coils 1, 3 and 10 of Table IIA (p. 365) have been measured up on apparatus now available, and come out as 11.8, 11.3, and 11.5$\mu\mu$F respectively. Since the same tuning capacity of about 120$\mu\mu$F tuned all these coils to the same frequency, their true inductances differed, in the extreme case, by one part in about 240, which is certainly too small an error to be seriously considered in any but the most accurate measurements of H.F. resistance.

Direct pick-up was pretty effectually swamped, as stated in the article, by the much greater pick-up of the aerial—it was found at the time that the orientation of the coil did not affect the reading of the meter.

Whether small differences were, or were not, brought out by the measurements in question depends on Mr. Turner's definition of a "small difference"—a tenth of an ohm would certainly have passed unnoticed, whereas half an ohm as certainly would *not*. The resistance of a circuit comprising a coil, condenser, leads and Moullin voltmeter have been measured to settle this point, and the values obtained with various coils of Table IIA, were as follows:—

Using Coil	1	...	14¼	ohms at	380 metres.
,, ,,	2	...	11½	,, ,,	,,
,, ,,	3	...	9	,, ,,	,,
,, ,,	10	...	10¼	,, ,,	,,

and the "deflections" already recorded were 810, 875, 955 and 910 respectively. A change in "deflection" of 5 units (the smallest readable) thus represents roughly one-sixth of an ohm.

In conclusion, may I be allowed to express my hope that I have persuaded Mr. Turner to agree that my measurements, although not up to the best laboratory standards, were yet a good deal more accurate than he imagined in writing to you a month ago.

A. L. M. SOWERBY.

119, Westbourne Grove, W.2.

"Aperiodic" or "Untuned"?

To the Editor, E.W.& W.E.

SIR,—With reference to correspondence by "F. A." in the current issue of *E.W.& W.E.* in which he prefers the use of the expression "untuned" to that of "aperiodic" when dealing with certain types of radio receivers, I venture to suggest that both expressions are equally incorrect, inasmuch as, to quote his own words that "any circuit which contains capacity and inductance must have a natural frequency (even when not purposely tuned)"—surely, if a circuit is not "purposely tuned" it is nevertheless tuned to some definite frequency, so why refer to it as being "untuned"?

I think that "Fixed Tune" would perhaps be more nearly correct.

Highbury. WILFRED GARTLAND (G2GP).

ERRATUM.

Germany's High Power Broadcasting Station.

It is regretted that through an error an incorrect diagram was inserted for Fig. 10 on page 415 of our last issue.

For convenience in making the correction, we have inserted the correct diagram in the advertisement pages of this issue.

CALIBRATION DEPARTMENT.

E.W.& W.E. Calibration Department is temporarily closed. An announcement will be made in these columns when readers' apparatus can again be received by this Department for calibration.

Digitized by Google

Some Recent Patents. [R008

A DOUBLE EARTH RECEIVING SYSTEM.

(*Application date, 6th February, 1925. No. 251,693.*)

G. A. Morris and B. C. Stevenson describe in the above British Patent Specification the arrangement of a device to substitute the normal receiving aerial. The scheme consists essentially in providing a receiver with two earth connections, the second earth connection substituting the usual aerial. Thus in the accompanying illustration two earth connections are shown at X and Y respectively. The ordinary receiver comprises a variable inductance L_1, a detector D and telephones T. The normal aerial and earth terminals of the receiver are not connected directly to the two

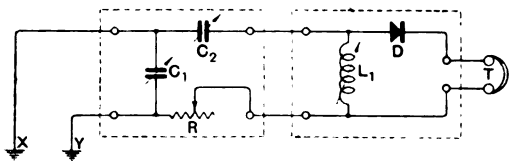

earth connections X and Y, but are taken through a network of capacities and a resistance. The capacity C_1 is placed across the earth connections. One end of the variable condenser C_1 is taken through another condenser C_2 to one end of the variable inductance L_1, while the other end of the inductance is connected to the other side of the capacity C_1 through a variable resistance R. It is stated that dissimilar earth connections may be used, such as a water pipe and a gas pipe. Alternatively, two earth tubes or plates may be used, placed some twenty feet apart, and preferably along the line joining the desired transmitting station with the receiver. The value of the condenser C_1 is of the order of .001μF while that of the condenser C_2 may be between .00001μF and .0003μF. Another modification of the invention consists in placing radio frequency chokes in shunt with the two variable condensers.

A FREQUENCY TRANSFORMER FOR SHORT WAVES.

(*Convention date (Germany), 16th August, 1924. No. 238,559.*)

The Telefunken für Gesellschaft Drahtlose Telegraphie M.B.H. described the construction of a rather interesting frequency transformer in the above British Patent. It is stated that the use of iron for frequency transformers for the purpose of generating very short waves introduces difficulty, owing to the losses which occur when a very great number of ampere turns per centimetre winding is necessary for a small volume. This results in considerable heat being generated which it is not possible to dissipate in the normal manner. The conductor carrying the currents at the fundamental frequency is surrounded with a thin ferro-magnetic layer, preferably not thicker than about 0.1 mm. For example, as shown in one of the figures reproduced, the conducting wire or tape may be surrounded with thin ferro-magnetic hair wire. The secondary circuit S and primary circuit P are connected through a conductor C spun round with thin hair wire. In an alternative modification the iron may be applied in a thin sheet by plating, spraying or powdering. The specification also includes other detailed modifications and alternative methods.

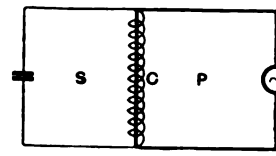

A REFLEX CIRCUIT.

(*Application dates, 11th February and 28th March, 1925. No. 251,374.*)

C. A. Cleghorn describes in the above British Patent a three-valve reflex circuit, the novelty of which lies in the introduction of resistance-coupled stages for both high and low frequency amplification. A three-valve circuit is shown in the accompanying illustration in which the first two valves act as dual amplifiers, the first one being resistance coupled and the second one being coupled by a

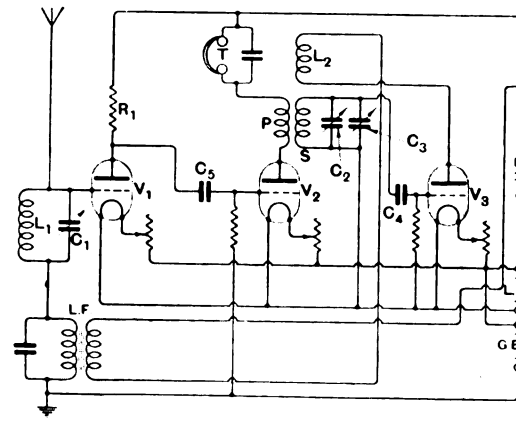

high frequency transformer to the rectifier, the output of which is fed back to the first amplifier. Thus, in the accompanying illustration it will be seen that the aerial circuit comprises an inductance L_1 and variable condenser C_1, connected in the grid circuit of the first dual amplifier. The dual amplifier contains a resistance R_1 in the anode circuit, which is coupled by a .005 fixed condenser to the grid of the second valve V_2. The anode

Digitized by Google

circuit of the valve V_2 contains the primary P of a high frequency transformer, and also the telephones T. The secondary of the transformer S is tuned by condensers C_2 and C_3, and is connected through the usual grid condenser C_4 to the grid of a detector valve V_3. The output circuit of this valve contains a reaction coil L_2, which is coupled to the secondary of the transformer, and also contains the primary winding of a low frequency transformer LF. The secondary winding of this is connected between the earth and the lower side of the input. Low frequency potentials which have been amplified by the first valve are passed on by the resistance R_1 to the grid of the second valve which amplifies them still further, the final output being taken to the telephones T contained in the anode circuit of the second valve.

A TELEVISION DETAIL.

(*Application date, 6th March,* 1925. *No.* 252,799.)

A rather interesting television scheme is described by G. M. Wright and R. N. Vyvyan in the above British Patent. The object of the invention is to control or modulate the rays as reflected from the target to an X-ray tube so as to effect a photographic device, or florescent screen. Thus, in the accompany illustration it will be seen that an X-ray tube

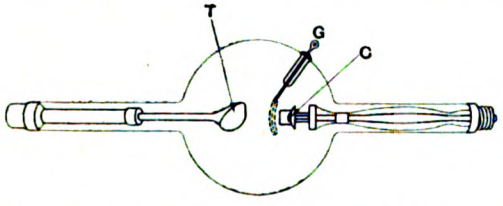

of the Coolidge type is shown, in which T is the target and C the cathode which is heated in the normal manner. A grid G is interposed between the cathode C and the target T, so that potential variations applied between the cathode and the grid will control the intensity of the rays which are emitted, thus causing a variation in the effect on the florescent screen, or other device which may be employed.

"A TALKING ARC."

(*Application date, 23rd September,* 1925. *No.* 241,874.)

Dr. H. Konemann describes in the above British Patent, No. 241,874, a modification of the singing arc. The object of the invention is to convert electrical into acoustic energy; that is, to provide some form of loud-speaker or telephone with the aid of an arc. The invention consists essentially in striking an arc between two carbon or similar electrodes, the arc being fed from high frequency currents, which are modulated at an audible frequency. Thus, a source of high frequency energy is obtained from H through the medium of a transformer or coupling device T, which is tuned by a condenser C and inductance L connected across the two carbons A. When the source of high frequency current is substantially steady the heat in the air gap remain constant, and there is no alteration in air density except, of course, at a radio frequency which is inaudible to the human ear. If, however, the high frequency current is modified by speech currents from a microphone, or similar source, the high

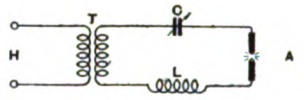

frequency energy will vary, causing a change in temperature between the electrodes of the arc, with a resultant change in air wave pressure, giving rise to ordinary sound waves. The advantage of the arrangement is that there is substantially no mechanical or electrical inertia.

A TRIGGER SYSTEM OF RECEPTION.

(*Application date, 31st March,* 1925. *No.* 250,748.)

A system of trigger reception is described by W. J. Brown, C. E. Burch and Metropolitan-Vickers Electrical Company, Limited, in the above British Patent, which includes several modifications of the invention, one of which will be described in detail. The accompanying illustration shows an ordinary three-electrode valve V, provided with a tuned grid circuit $L1$ $C1$, and a reaction coil $L2$, the two coils being coupled so as to produce a regenerative effect. The lower end of the grid circuit is connected to the lower end of the filament by a potentiometer P and a by-pass condenser $C2$. The potentiometer P is adjusted so that the steady voltage of the grid is sufficiently negative to prevent the maintenance of oscillations. The anode voltage is derived from a source of alternating current A, and is connected in series with an inductance such as a relay R, shunted by a condenser $C3$. When the negative half cycle is applied to the anode the valve, of course, is inoperative, but when the anode is positive with respect to the filament then the valve is operative, a certain steady anode current flowing and passing through the relay, which is adjusted so that at those values it does not quite pull over. If, now, the inductance L_1 be coupled to an aerial system, and tuned to resonance with a given signal, it follows that potential variations will occur between

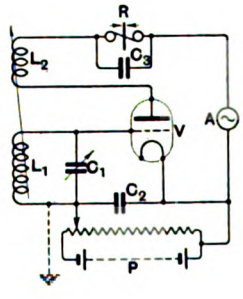

the grid and the filament with the result that the grid will become more positive on the positive half cycles. This increase of positive potentials is sufficient to cause the valve to oscillate when the valve is positive with respect to the filament. As soon as the valve commences to oscillate there

Digitized by Google

will be a considerable increase in steady anode current, sufficient, in fact, to cause the relay to become operative. If the device were supplied with direct current it is probable that the oscillations would be maintained immediately the device had been trigged. However, as soon as the anode becomes negative with respect to the filament the anode current will be materially cut down, sufficient, in fact, to quench the oscillations, and at the same time cause the relay to return to its normal position. The arrangement thereby being ready to deal with the next signal. The specification is very detailed, and includes other modifications, particularly the adoption of this principle to super-regenerative circuits. Where an indicator is used instead of ordinary telephone receivers the frequency of the alternate potentials applied to the anode may be quite low, a 50-cycle commercial supply, for example, being suitable. In the case of telephone reception, or with a super-regenerative arrangement, a local oscillator valve functioning at a frequency in the neighbourhood of audibility is preferred.

ANOTHER CARBORUNDUM DETECTOR.

(*Application date, 26th March,* 1925. *No.* 251,408.)

Another modification of the Carborundum Company's crystal detector is described in the above British Patent. The chief novelty of the detector is in the preparation of the carborundum crystal,

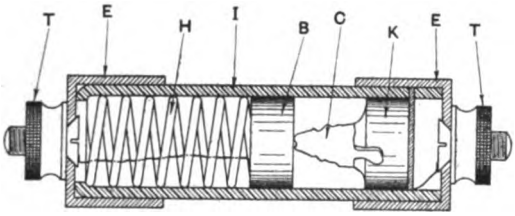

a portion of which is metallically coated and soldered into a containing cup, or similar device. In this particular modification, however, a carborundum crystal *C* treated in this manner is fixed to a cup *K*, the point of the crystal, which is made chemically pure, being in contact with a steel block *B* in the form of a cylinder which moves in an insulating tube *I*. The end of the steel piston or block *B* is controlled by a strong helical spring *H*. The ends of the tube are closed by means of end caps *E* to which are fixed terminals *T*. Other modifications of the patent include the substitution of other forms of springs such as leaf springs, and those of *U*-shaped formation.

A DOUBLE FILAMENT VALVE.

(*Application date, 19th June,* 1925. *No.* 252,554.)

The Dubilier Condenser Company (1925), Ltd., and J. V. Capicotto describe in the above British Patent the construction of a valve which can be used without the normal grid-leak. The idea of the invention can be gathered by reference to the accompanying illustration, in which it will be seen that a tuned circuit L_1 C_1 is connected between the grid *G* and filament *F* of the valve *V*, the usual grid condenser C_2 being included. Normally with this arrangement the grid would assume a negative charge, thus causing the valve to become inoperative. It will be noted, however, that a small additional filament *A* heated by a battery *B* and controlled by a rheostat *R* is included in the valve, and is connected to the grid *G*. Thus it will be

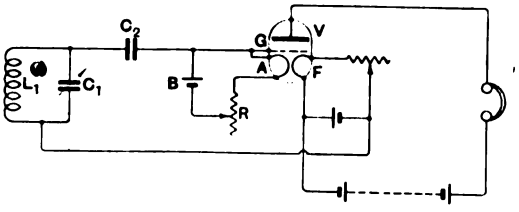

seen that if the filament *A* is heated it will emit electrons which will thus enable the charge which is collected on the grid to leak away to the main filament. In other words, the auxiliary filament *A* acts as the grid-leak of the arrangement, and the value of the grid-leak can be varied by controlling the rheostat associated with the auxillary filament.

In a modification of the invention, the second filament is used as the grid or control electrode.

A MULTIPLE VARIOMETER.

(*Application date, 13th July,* 1925. *No.* 250,278.)

R. B. Matthews and W. H. R. Pike described in the above British Patent the construction of a multiple variometer, which consists essentially of a stator, and two co-axially mounted rotors. One modification of the invention is illustrated by the accompanying diagram, in which two variometers *A* and *B* are mounted upon a common stator tube *T*. The variometer *A* consists of a rotor *a* controlled by a knob *d*, and a stator *S*. An additional rotor *E* controlled by a knob *D* forms part of the winding of the variometer *B*.

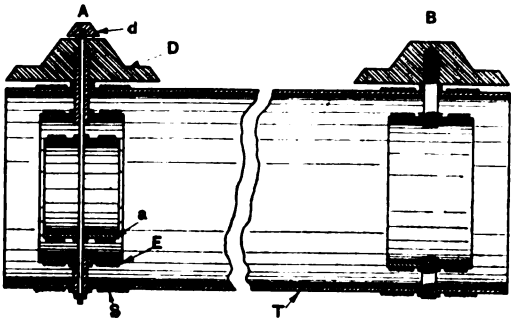

By this arrangement it is found easily possible to couple the two variometers together. The specification also provides for the use of one of the windings as a reaction coil.

Digitized by Google

LOUD-SPEAKER MOVEMENT.

(*Application date, 6th August,* 1925. *No.* 251,151.)

J. Piquart claims in the above British Patent, No. 251,151, the construction of a loud-speaker movement which is represented diagrammatically by the accompanying illustrations. The loud-speaker movement consists of a horseshoe magnet *H* (Fig. 1) provided with L-shaped laminated pole pieces *L*, which carry the usual windings *W*. A peculiar

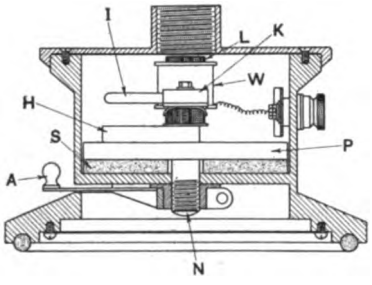

Fig. 1.

feature of the invention is the inclusion of some iron rods *I*, which are clamped over the edges of the laminated pole pieces by means of clamping devices *K*. The horseshoe magnet is carried by a plate *P*, which rests on a block of sponge rubber *S*, which, in turn, rests upon the base of the container. The plate is provided with a screwed stud *N*, other screwed studs *M* (Fig. 2) projecting in the lower face of the plate, and surrounded with helical springs. Adjustment of the magnetic portion with respect to diaphragm is obtained by means of a lever *A*, which rotates a threaded device co-operating with the screwed stud *N*, thereby causing the stud to rise and fall, and

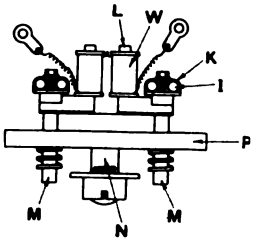

Fig. 2.

carry with it the movement. The specification is fairly detailed, and contains constructional information and additional minor features. For example, it may be mentioned that the end of the sound conduit is screwed rigidly into position.

DUPLEX SIGNALLING.

(*Application date, 31st March,* 1925. *No.* 250,747.)

E. W. Braendle and Metropolitan-Vickers Electrical Company, Limited, describe a system of duplex signalling in the above British Specification. Essentially, the invention consists in utilising synchronised sources or a common source of high tension supply, one half cycle of which is used to make the transmitter valves operate, while during the other half cycle the receiving valves are operative. This enables duplex signalling to be carried out, accompanied, of course, by a superimposed hum, due to the frequency of the alternating current supply. A source of alternating current supply *E* feeds two conductors *A* and *B*. The valve V_1 is used as a generator of high frequency currents, a tuned circuit L_1 C_1 and a grid coil L_2, coupled in the usual manner, a key *K* being used. The anode of this valve is supplied from current derived from the source *A*, while the filament of the valve is connected to the conductor *B*. The valve V_2 is used for reception, and comprises a tuned grid circuit L_3 C_3, a reaction coil L_4 being included in the anode circuit. A relay *R* is shown as the indicating device. A bias battery will be noticed in the grid circuit of this valve, arranged so as to give the grid a negative potential with respect to the filament. The valve receiver is of the trigger variety, in which the received signals

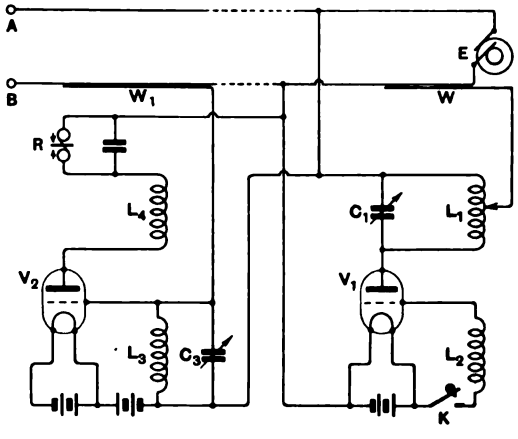

cause oscillations to commence which are subsequently quenched when the anode becomes negative with respect to the filament. The anode of the valve V_2 is fed from the conductor *B*, that is, the opposite conductor from that feeding the anode of the valve V_1, while the filament of the valve V_2 is connected to the conductor *A*. The two valves are electrostatically coupled to the conductor *B* by means of wires *W* and W_1 respectively. An exactly similar arrangement of valves is shown connected to the same conductors *A* and *B* intended to be placed some distance away. Thus it will be obvious that on one half cycle one transmitter and distant receiver will become operative, while on the other half cycle the distant transmitter and near receiver will be operative. In this way duplex signalling can be carried out. The system is not applicable as indicated to telephony owing to the trigger type of receiver and the superimposed hum.

Digitized by Google

SPECIAL STUDENTS' LIBRARY EDITION

FIFTY YEARS of ELECTRICITY

By I. A. FLEMING, M.A., D.Sc., F.R.S.

The Memories of an Electrical Engineer

Crown 4to
371 Pages
111 Plates
Cloth Bound

PRICE
15/-
Net.

By Post
15/9.

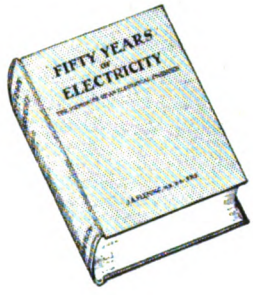

IN this volume the author places before the general reader a review of the chief triumphs of applied electricity during the last half-century.
Dr. Fleming's name gives to the book an authority which those interested in the subject will appreciate. The author has a word to say upon every phase of applied electricity, and besides giving a critical account of the activities of the past fifty years, he indicates the trend of present research and suggests the course of future progress and development. Every student should make a point of obtaining a copy of this new edition of what may be regarded as a classic of technical literature.

Obtainable from all leading Booksellers or direct from the Publishers:

ILIFFE & SONS LTD., Dorset House, Tudor Street, London, E.C.4

2nd VOLUME *of* EXPERIMENTAL WIRELESS & The WIRELESS ENGINEER

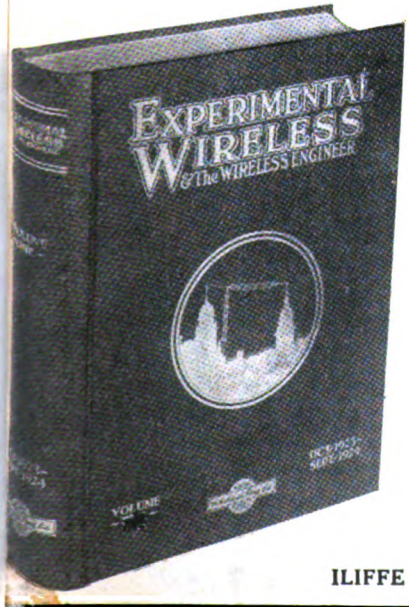

The SECOND BOUND VOLUME of "Experimental Wireless" contains fifteen monthly issues of the magazine, from October, 1924, to December, 1925, inclusive. It is a storehouse of indispensable information for all advanced research and experimental workers. The volume is handsomely bound in cloth, and contains the complete contents, together with a copious and well-arranged alphabetical index to all articles.

PRICES OF BOUND VOLS.

VOLUME TWO. Oct., 1924—Dec., 1925.
£1 3s. 6d., post free.

VOLUME ONE. Oct., 1923—Oct., 1924.
£1 0s. 6d., post free.

BINDING CASES

Cloth Binding Cases for Volume Two are now on Sale. Price 3/3 post free.

BINDING YOUR VOLUMES

Send us your 15 issues and we will return these handsomely bound in cloth with index. Price 8/9 net, post free.

SEND *YOUR* ORDER NOW!

Please address all communications to "EXPERIMENTAL WIRELESS,"
ILIFFE & SONS LTD., Dorset House, Tudor Street, LONDON, E.C.4.

Digitized by Google

BUYERS' GUIDE.

AMMETERS.—Burndept Wireless, Ltd., Aldine House, Bedford Street, Strand, W.C.2.

ANODE CONVERTER.—S. Smith & Sons (M.A.), Ltd., 185, Great Portland Street, W.1.

COILS.—Gambrell Bros., Ltd., 76, Victoria Street, London, S.W.1. Igranic Electric Co., Ltd., 149, Queen Victoria Street, E.C. Lissen Ltd., Friars Lane, Richmond, Surrey. Slektun, Wellington House, Buckingham Gate, S.W.1. A. J. Stevens & Co. (1914), Ltd., Radio Branch, Wolverhampton. Tunometer Works, Gosford Road, Beccles, Eng.

COIL HOLDERS.—Igranic Electric Co., Ltd., 149 Queen Victoria Street, E.C. A. G. Parker & Co., Bisley Works, Whittall Street, Birmingham.

CHOKE (L.F.).—Lissen Ltd., Friars Lane, Richmond, Surrey.

CONDENSERS (GENERAL).—Autoveyors, Ltd., 84, Victoria Street, S.W.1. Bowyer-Lowe Co., Ltd., Letchworth. Dubilier Condenser Co. (1925), Ltd., Goldhawk Road, W.12. Igranic Electric Co., Ltd., 149, Queen Victoria Street, E.C. Lissen Ltd., Friars Lane, Richmond, Surrey. Marconiphone Co., Ltd., 210, Tottenham Court Road, W.1. W. G. Pye & Co., "Granta Works," Montague Road, Cambridge Wilkins & Wright, Ltd., Utility Works, Kenyon Street, Birmingham.

GALVANOMETERS (CAMBRIDGE UNIPIVOT).—Cambridge Instrument Co., Ltd., 45, Grosvenor Place, S.W.1.

GENERATORS.—Evershed & Vignoles, Ltd., Acton Lane Works, Chiswick, London, W.4.

GRID LEAKS.—Igranic Electric Co., Ltd., 149, Queen Victoria Street, E.C. Lissen Ltd., Friars Lane, Richmond, Surrey. Watmel Wireless Co., 332a, Goswell Road, E.C.4.

HEADPHONES.—A. J. Stevens & Co. (1914), Ltd., Radio Branch, Wolverhampton.

KNOBS (SPECIAL TYPE).—Igranic Electric Co., Ltd., 149, Queen Victoria Street, E.C.

LOUD SPEAKERS.—Alfred Graham & Co., St. Andrew's Works, Crofton Park, S.E.4. Marconiphone Co., Ltd., 210, Tottenham Court Road, W.1. A. J. Stevens & Co. (1914), Ltd., Radio Branch, Wolverhampton.

MEASURING INSTRUMENTS.—Burndept Wireless, Ltd., Aldine House, Bedford Street, W.C.2. F. C. Heayberd & Co., 9, Talbot Court, Eastcheap, E.C. Weston Electrical Instrument Co., Ltd., 15, Great Saffron Hill, E.C.1.

PERIODICALS.—"Journal of Scientific Instruments," "Institute of Physics," 90, Great Russell Street, W.C.1.

RESISTANCES (ANODE).—Lissen Ltd., Friars Lane, Richmond, Surrey. Varley Magnet Co., Woolwich, S.E.18.

RESISTANCES (FILAMENT).—Igranic Electric Co., Ltd., 149, Queen Victoria Street, E.C.

TANTALUM RECTIFIER.—Radio Accessories, Ltd., 9/13, Hythe Road, Willesden, N.W.10.

TERMINALS (SPECIAL TYPE).—Autoveyors, Ltd., 84, Victoria Street, S.W.1. Igranic Electric Co., Ltd., 149, Queen Victoria Street, E.C. M.A.P., Ltd., 246, Great Lister Street, Birmingham.

TRANSFORMERS.—Ferranti Ltd., Hollinwood, Lancs.

TRANSFORMERS (L.F.).—Igranic Electric Co., Ltd., 149, Queen Victoria Street, E.C. W. G. Pye & Co., "Granta Works," Montague Road, Cambridge.

VALVES.—Economic Electric Co., Ltd., 10, Fitzroy Square, W.1. The Fellows Magneto Co., Ltd., Park Royal, N.W.10. General Electric Co., Ltd., Kingsway, W.C. Lustrolux Ltd., West Bollington, near Macclesfield. Marconiphone Co., Ltd., 210, Tottenham Court Road, W.1. Metro-Vick Supplies, Ltd., 145/147, Charing Cross Road, W.C.1. The Mullard Wireless Service Co., Ltd., 45, Nightingale Lane, Balham, S.W.12.

VERNIER ATTACHMENTS.—Igranic Electric Co., Ltd., 149, Queen Victoria Street, E.C.

QSL CARDS.—E. H. Appleby, The Croft, Willesden, N.W.10. T. Warburton & Co., Ltd., 77, Sackville Street, Manchester.

WAVEMETERS.—Heath & Co., New Eltham, S.E.9.

The Diagram reproduced below should be inserted on page 415 of the issue of E.W. & W.E. for July in place of the diagram reproduced there in error.

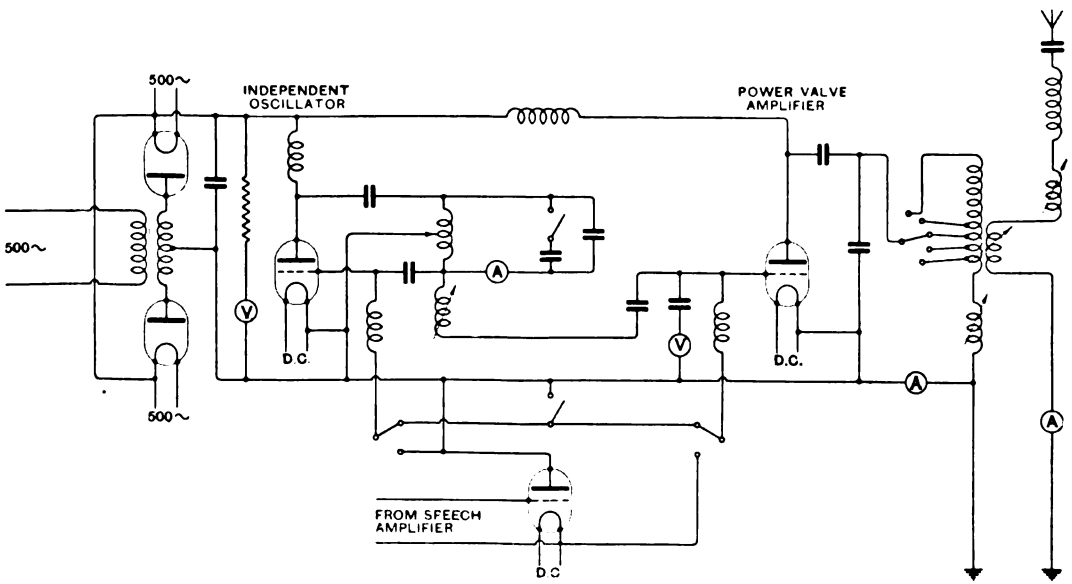

Fig. 10. *Simplified diagram of connections.*

Digitized by Google

EXPERIMENTAL WIRELESS
& The WIRELESS ENGINEER

VOL. III. SEPTEMBER, 1926. No. 36.

Editorials.

Who Invented the Neutrodyne?

PERHAPS it would be advisable if, before attempting to answer this question, we asked another, viz., what is a Neutrodyne? Both of these questions are prompted by the recent visit to this country of Professor Hazeltine of the United States of America, who was entertained to lunch at the Savoy Hotel by a wireless trade paper of which Mr. Scott-Taggart is Editor, and who in the course of a subsequent speech made some very complimentary remarks about his host, which remarks are set out with suitable headlines in a recent number of one of Mr. Scott-Taggart's publications. Not without reason, however, for Professor Hazeltine is stated to have said that "while we in America call the receiver the Hazeltine neutrodyne, we should in England call it the Scott-Taggart neutrodyne."

The financial importance of the neutrodyne patents may be judged from the astounding statement that Professor Hazeltine and his associates in the Hazeltine Corporation draw patent licence fees to the extent of £120,000 per annum.

We propose to sketch briefly the history of the subject.

British Patent No. 119365 of 1918 is in the name of the British Thomson-Houston Co., but was communicated to them by the General Electric Co. of America. The inventor was, we believe, Mr. Rice. It is entitled: "Improvements in and relating to Systems for Amplification of Small Currents," and the specification opens as follows: "Our present invention relates to the amplification of electric currents of small intensity and especially currents such as are produced in an antenna by received radio signals. More particularly it relates to the use of electron discharge relays, detectors or amplifiers of the type employing an incandescent cathode or anode and a grid enclosed in an evacuated envelope for receiving radio signals.

"It has been found that under certain conditions a device of the above type produces oscillatory currents in the circuits associated therewith, and in many cases the oscillatory currents so produced interfere with the efficient reception, amplification and detection of the signals to be received. The object of our invention is to avoid the undesired production of oscillatory currents when such a device is used either as an amplifier or detector, or to serve both functions.

"It has been ascertained that the production of oscillatory currents by such a device is due to the coupling which is always present between the grid and plate circuits. This coupling is of two kinds, electromagnetic and electrostatic. When the plate and grid circuits both contain air core inductances which are not magnetically shielded from each other there will be a large leakage flux between the two and electromagnetic transfer of energy from the plate circuit to

Digitized by Google

the grid circuit which may be sufficient to produce oscillations in the circuits even though the coils may be located at some distance from each other. There is in any case a certain electrostatic coupling between the two circuits by reason of the capacity between the electrodes and the capacity to ground of the circuits. This coupling alone may also be sufficient to produce oscillations. It has been proposed to neutralise the electromagnetic coupling by a second electromagnetic coupling in the opposite direction. This coupling may also be made great enough to compensate for the capacity coupling, but in case it is so arranged it will be correct only for one particular frequency and in case the tuning of either of the circuits is varied the degree of the coupling also will have to be varied.

" In carrying our invention into effect we overcome the electromagnetic coupling between the circuits which is present when air core inductances are used by enclosing the inductances in separate metal boxes. We also overcome the effect of the electrostatic coupling by impressing upon the circuits electromotive forces equal to and opposite in direction to those impressed thereon by reason of the natural capacity coupling and thereby neutralise the effect of this coupling. When this compensation is once adjusted it is effective for all frequencies to which the circuits may be tuned."

We need not continue this detailed quotation from the Patent Specification, but we may mention that the neutralisation of capacity coupling is shown both for a single valve receiver and for a three valve receiver with two stages of high frequency amplification. No claim is made for putting the coils in metal boxes, but it is stated that the coils " are so arranged as to avoid any magnetic coupling between the two circuits." We shall only reproduce the first claim which is as follows: " In a radio receiving system, an electron discharge amplifier having resonant grid and plate circuits and means for compensating for the capacity coupling between said circuits and thereby preventing the generation of oscillatory currents in said circuits which interfere with the reception of desired signals." It would take us too far in this Editorial note to discuss in detail the means described for attaining this object, but the principle will be seen from the statement in the specification that " in order to compensate for the coupling due to the natural capacity (12) between the grid and anode . . . we apply to the grid circuit through the condenser (13) an electromotive force equal and opposite to that impressed upon the grid from the anode across the capacity (12). In order to do this the cathode is connected to the central point of inductance (4), the grid is connected to one end of this inductance and condenser (13) is connected to the other." So that we have here in 1918 a fairly lucid statement of the problem and a method of solving it, using the now familiar neutralising condenser and central tapped inductance.

We do not pretend to give any opinion on the validity of this patent or of its individual claims, but we do wish to emphasise that this patent with its statement of the problem and its incentive to develop other methods of solving it, was applied for on 2nd January, 1918, and finally accepted on 3rd October, 1918, whereas Hazeltine's application was filed on 7th August, 1919, and not finally patented until 27th March, 1923. There are other Hazeltine patents, but we believe that we are right in saying that this is the first one referring to this subject; it is entitled " Method and Electric Circuit Arrangement for Neutralising Capacity Coupling." We need not describe Hazeltine's method as it is well known; like the original method of the B.T.-H. Co.'s patent it involves an arrangement of tapped inductance coils and neutralising condensers. The name " Neutrodyne " has been registered by Hazeltine and can strictly only be applied to his patented arrangement; other arrangements for attaining the same result should therefore be described as neutralised or capacity-balanced or some such term. Mr. Scott-Taggart's application for a patent was not made until 2nd January, 1923, exactly five years after the B.T.-H. Co.'s application, and three and a half years after Hazeltine's, but as the latter's patent was not published in this country until 5th April, 1923, Mr. Scott-Taggart's patent takes priority in so far as it may anticipate anything in the Hazeltine patent.

Now although the B.T.-H. Co.'s patent specification shows a three valve set it omits the neutralising condenser shown in the single valve set, on the plea that " we have found

Digitized by Google

that if coils having a large number of turns are employed, the capacity between the coils is so great in comparison with the capacity (12), that the effect of the latter may be neglected." Mr. Scott-Taggart's patent is therefore mainly confined to "a plurality of stages," and he had to insert a statement to the effect that he was aware of Specification No. 119365, and that he made no claim to anything described or claimed therein. The patent situation has been somewhat simplified by the sale of the Scott-Taggart patent to a person who turned out to be an agent of the Hazeltine Corporation.

With reference to Mr. Scott-Taggart's complaint that although "the Scott-Taggart patent had been published in June, 1923, in *Wireless Weekly*, and the British industry was fully aware of the inventor's claims, not a single firm approached the owner of the patent," it is interesting to note that the patent was not accepted until 2nd July, 1924, and that it was taken out in the joint names of Mr. John Scott-Taggart and Radio Communication Co., Ltd.

We do not intend to enter into any discussion as to the relative merits of the three patents,—such a discussion would be out of place,—but we think that we have given sufficient of the history of the subject to enable any reader to form his own opinion as to who it was, that in 1918 invented the neutralisation of the valve capacity, and who it was that in the following year first invented the special arrangement of neutralisation known by the name of neutrodyne.

Cathode Ray Tubes.

CONSIDERABLE attention has been devoted in recent times to the cathode ray tube, especially to its use as an oscillograph and general high frequency accessory. The well-known Western Electric tube has done much to lift this type of instrument from the grade of a laboratory experiment to an engineering device, and places an instrument of great potentialities in the hands of the wireless engineer. It must be said, however, that there is yet room for development, more especially of increased deflectional sensitivity, which is concomitant with lower anode voltages. Details are already to hand, from America, of a tube giving what is described as a bright beam at the modest potential of 50 volts. The whole subject is one worthy of more attention by makers in this country. Apart from its value as a purely measuring instrument and laboratory accessory, there are considerable possibilities in these tubes as regards their application to more ordinary wireless technique. The ideal to be aimed at is a tube of the dimensions of a large receiving power valve, perhaps even of a small transmitting valve, operating on voltages readily available at any wireless station. Perhaps the time will come when such tubes may be handled as casually as the average wireless man now handles his valves.

Power Losses in Insulating Materials.

IN *E.W. & W.E.* of May, 1925, Mr. Wilmotte, in a paper entitled "Parasitic Losses in Inductance Coils at Radio Frequencies," pointed out that phase angle in itself was not a sufficient criterion of the quality of a dielectric with respect to losses but that the true criterion was the product of the phase angle and the dielectric constant. Our attention has been drawn to the fact that this was emphasised by Mr. E. T. Hoch in a paper entitled "Power Losses in Insulating Materials," published in November, 1922, in Vol. 1, No. 2 of the *Bell System Technical Journal*. In this article Mr. Hoch says: "While no single factor of the expression can be used to represent the losses, the product of phase difference and dielectric constant can be used in this way. Furthermore, for most good insulators, this product remains fairly constant throughout a considerable range of voltage and frequency."

Digitized by Google

The Keying of Valve Transmitters.

By W. T. Ditcham, A.M.I.E.E. **[R385**

AT first sight the three-electrode valve appears so peculiarly adapted for easy signalling control that there would seem to be little to do to carry out a satisfactory method of keying.

As a matter of fact a completely satisfactory solution of the problem presents considerable difficulties, more particularly when signalling with large powers has to be accomplished, and although the transmitting amateur has not these particular high power difficulties to contend with, a description of various methods that have proved serviceable in commercial practice may be of interest to the experimenter.

In any keying method, whether the power is large or small, the ideal to be aimed at is that the signalling shall not appreciably affect the frequency of oscillation. If this condition is not fulfilled then it will be found that the dots are radiated on a different wavelength to the dashes, and probably that the dashes vary in wavelength throughout their length, giving a peculiar wailing note in the receiver. Constant frequency is essential in long range commercial work where sharply tuned note filters are necessary at the receiving end to reduce interference. In the case of commercial transmitters the keying system must usually be capable of operating at high speed, and when large powers are in question then it is vital that the keying does not cause dangerous voltage surges on the valves.

Valve transmitters can be classified into two main divisions :—

(*a*) Self-excited oscillators,
(*b*) Magnifiers excited by a master oscillator,

and these two groups can be further differentiated according to whether they operate on plain aerial or with coupled circuits, and whether the power supply is provided by direct current or rectified alternating current.

To each of these types different methods of keying are particularly applicable.

Considering the simplest type first, namely, the self oscillator with plain aerial, the most obvious method of keying is to open and close the grid resistance, and preferably simultaneously make and break the power supply. Numerous small power sets have been constructed with this signalling arrangement, but except for simplicity there is nothing in its favour, the note quality generally being very poor. A possible alternative is to use the key to vary the value of the grid resistance or grid-leak condenser, which operation causes a slight change in wavelength. In this arrangement the valve is not caused to stop oscillating, but marks are transmitted on one frequency and spaces on another. The method gives good quality and small key sparking, but is not likely to find favour nowadays when wavelengths are so precious.

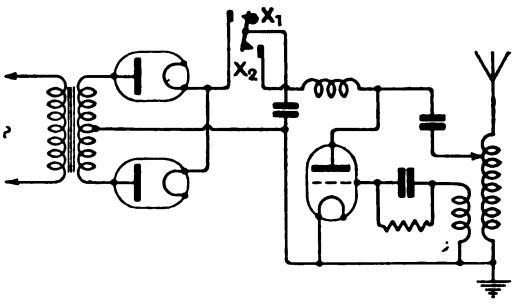

Fig. 1. *A plate keying circuit used on primitive transmitters.*

Better results are obtained with these simple transmitters by keying in the plate circuit, and this method has been much used. As the normal transmitter of power exceeding half a kilowatt or so almost always operates on a rectified alternating current supply with a smoothing circuit, although a few sets have been used employing polyphase currents fed directly to the oscillator anodes, and several high power stations work with high tension D.C., we will review a few plate circuit signalling methods suitable for this type of set. It may be noted in passing that keying cannot be carried out by simply breaking the primary of the power transformer of such a set, as the smoothing condenser will go on discharging and maintaining the valve in oscillation after the key

Digitized by Google

has opened, so that except at very low speeds the signals will be so blurred as to be useless for traffic.

A method which had considerable application in sets up to some five kilowatts power is shown in Fig. 1.

In this arrangement a double-break solenoid-operated key served to isolate the smoothing condenser from the supply, and also from the oscillating valve. The reasons for the necessity of the two breaks should be understood. Clearly if the circuit was broken only at the point X_1 in the diagram then the blurring effect mentioned above would take place, and if the key was arranged to break at the point X_2 only, then the condenser would remain connected to the rectified input with no means of discharging. This would result in the condenser becoming charged to a potential equal to the peak voltage of the transformer, a voltage that might be nearly twice the normal working value. On the key reclosing obviously this high voltage would be thrown on to the valves causing a transient frequency variation, and possible damage to the oscillator. This condenser voltage rise has always to be taken into account when rectified alternating current is employed, and the valve load is removed during signalling. Fig. 2 shows an improvement, inasmuch as the primary power is also interrupted, a double armed signalling switch being employed.

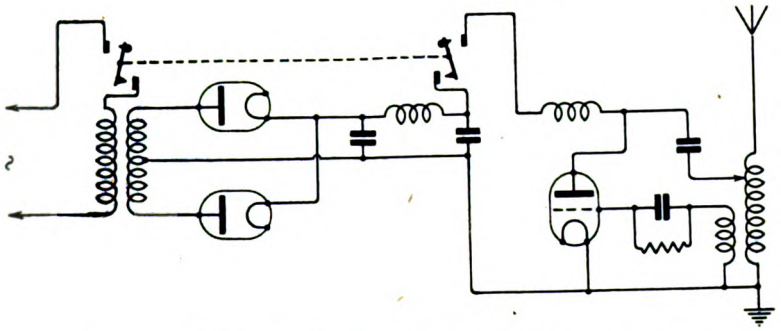

Fig. 2. *Simultaneous keying of primary and plate currents.*

It has been found that the quality of the keying note from a self-oscillating transmitter is improved if, instead of completely stopping the oscillations, the valve is allowed to continue oscillating weakly during the spacing intervals. A circuit which permits of this is shown in Fig. 3.

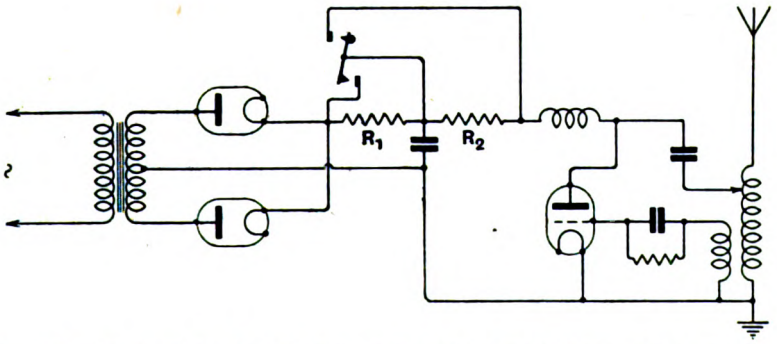

Fig. 3. *A keying circuit in which the valve can oscillate weakly during the spacing intervals.*

By suitably proportioning the two resistances R_1 and R_2 the voltage on the smoothing condenser can be maintained constant whether the key is open or closed. A variant of this method is represented in Fig. 4, where a double ended switch simultaneously

Digitized by Google

operates across a high resistance in the plate circuit and a variable choke in series with the transformer primary. As before, by adjustment of the resistance and choke the condenser voltage can be kept steady during keying. This method has been used successfully with powers up to about twenty kilowatts, and at speeds of sixty words per minute.

In this arrangement L_1 and L_2 are two coupling coils connected in such a manner as to induce an equal and opposite voltage in the aerial inductance, so that under these conditions the aerial current is practically zero. Across one of these coupling coils is connected a single contact key and when this is closed obviously the coupling balance is upset and the energy in the primary circuit

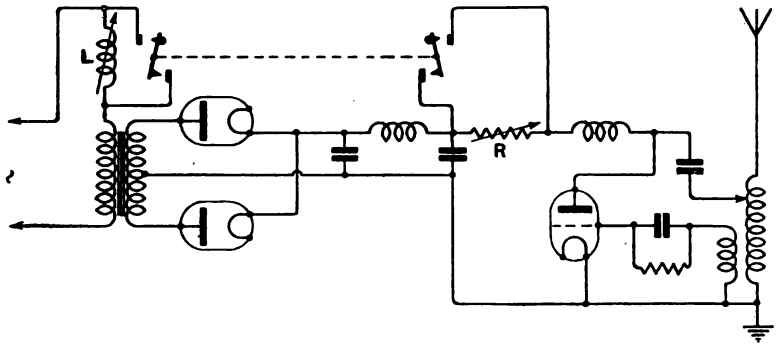

Fig. 4. *Another keying circuit which produces a spacing wave.*

All these high tension keys require an air blast across the breaks to blow out the arcs formed, and suffer from the disadvantage that contact adjustments cannot safely be made while the transmitter is in operation.

The plain aerial type of self oscillator has little application nowadays, as the wave-

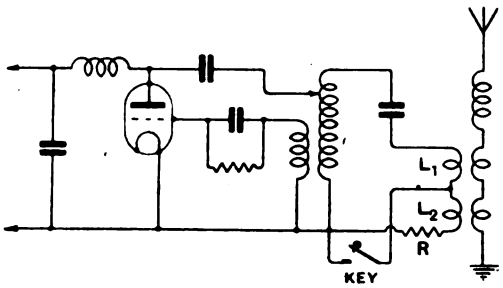

Fig. 5. *A keying method used in coupled circuit oscillators.*

length is too greatly affected by aerial movement, and the strength of the harmonics radiated is undesirable.

The coupled circuit transmitter permits of another method of signalling suitable for medium power, which has several advantages over those previously described. Fig. 5 will make this method clear.

is transferred to the aerial. In this method when the key opens the aerial load is removed from the primary circuit, and consequently the current in this circuit will increase considerably and in some cases may break down or flash across the primary condenser. To avoid this trouble a resistance marked R in the diagram is connected as shown, and adjusted in value so that the primary current remains unchanged. In this arrangement the voltage across the break is quite low, so that only a small contact movement is necessary, making for high speed, and adjustments can safely be made during operation. This method has been used commercially in transmitters up to about twenty kilowatts input, with air-engine driven keys capable of well over one hundred words per minute, and would probably have been widely employed but for the advent of the master oscillator or independent drive system which renders practicable simpler and cheaper keying apparatus.

Given a transmitter comprising a driving oscillator and a magnifier, the simplest signalling system is obtained by keying the grid resistance of the magnifier as indicated in Fig. 6.

When the resistance is open circuited the drive oscillations, due to the rectifying

Digitized by Google

action of the magnifier valve, build up a high negative voltage on the grid of this valve, effectually stopping plate current from flowing. With small power sets very good results are obtainable with this simple method.

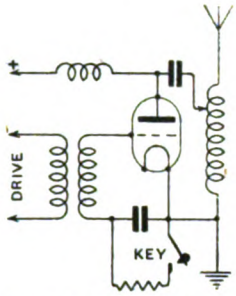

Fig. 6. *Method suitable for small power transmitters using an independent drive.*

Several of the Atlantic liners are fitted with transmitters keyed in this manner, and can despatch traffic at over one hundred words per minute.

A refinement on this method is to replace the grid resistance by the plate to filament resistance of a three-electrode valve, and signal by varying the potential on the grid of this valve; see Fig. 7.

The key for this circuit can be so light and the contact movement so small that extremely high signalling speeds are attainable.

For sets of higher power somewhat more complicated arrangements are necessary,

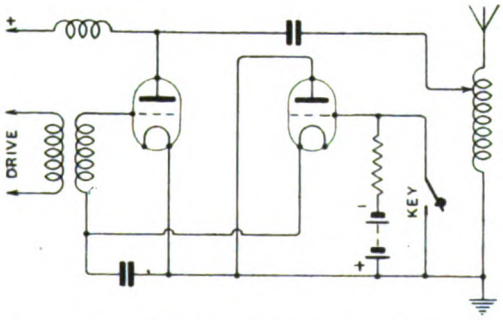

Fig. 7. *A method permitting very high signalling speeds.*

and one of the most practical is disclosed in Fig. 8.

This method is reminiscent of the Fig. 5 method inasmuch as the keying is done across one of two balanced and opposed coupling coils, but in this case the coils couple the drive oscillatory circuit to the grid of the magnifier V_1. A suitable negative bias is put on the magnifier grid, so when the key opens the contacts X_1, and the opposed coupling coils come into action the plate current is stopped, and, of course, the oscillations cease. To prevent the voltage rise when the oscillatory load is removed, an absorber valve V_2 and a resistance R_1 form part of the keying system. The absorber V_2 has a constant negative potential applied to its grid through a high resistance R_2, while a positive potential, usually generated by a small dynamo, can be applied through a second pair of contacts X_2 on the key. It will be observed that with X_1 closed and X_2 open the absorber has no effect on the

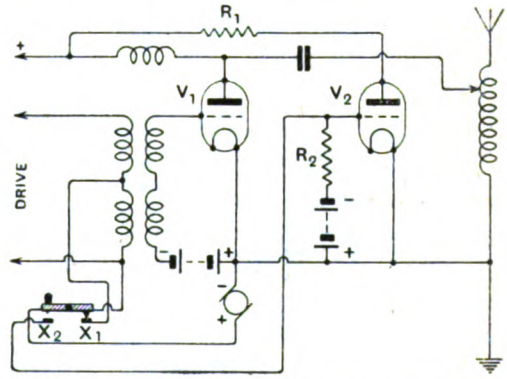

Fig. 8. *A modern method used in various commercial stations.*

circuit, but when the key opens X_1 and consequently closes X_2, the absorber grid becomes positive and plate current passes, its amount depending principally upon the value of the resistance R_1. The resistance of the valve V_2 can be made very low in this way, and therefore the actual loss in the valve is also small, the major portion of the energy absorbed being dissipated in the resistance R_1. With suitable adjustments there is no difficulty in keeping the smoothing condenser volts practically constant whether the key is on "mark" or "space." This method is used successfully at a number of long range high speed commercial stations, among them the Marconi Company's stations at Ongar, Essex.

As previously remarked, up to the present almost all medium power transmitters have relied upon rectified alternating current for

Digitized by Google

the requisite high tension plate voltage, due to the fact that high voltage direct current dynamos of these powers have not been developed to the same degree of reliability as the alternator and static transformer combination, but in the case of large machines this drawback does not apply, and certain high power transmitters, the Marconi station at Carnarvon and the new Post Office station at Rugby among them, employ directly generated high tension and thus save the cost of the large number of rectifier valves that would otherwise be necessary.

The keying of these high power sets is by no means an easy matter. Owing to the fact that the high voltage dynamos possess a large self inductance, and that the plate current of the transmitter is considerable—at Carnarvon, for instance, it may exceed twenty amperes—it will be appreciated that the sudden stoppage of this current will result in very high voltage transients which can easily damage the valves. For this reason grid keying methods are unsuitable as giving too sudden a reduction in the plate current. Keying by breaking the main plate current with an air blast on the key contacts is possible, as when the key opens a gradually increasing resistance, in the form of the arc between the contacts, is inserted into the plate circuit so that the current falls with a certain time lag, which can be conveniently adjusted by the strength of the air blast. Over two hundred kilowatts has been successfully keyed like this, but it is difficult to construct a key suitable for such work which can operate for long periods at more than about eighty words per minute, a speed considered rather low in modern commercial practice.

This branch of the subject is too complicated to be more than just touched upon in this article, but judging from the results of numerous experiments one is inclined to doubt whether transmitters of this type can be keyed satisfactorily except by maintaining a considerable portion of the load on the dynamo during the "space" periods, and thus nullifying the inductive voltage surges. This implies that instead of interrupting the current from the machine, means must be provided for diverting it from the valve anodes to some absorbing circuit without any break as regards the dynamo output.

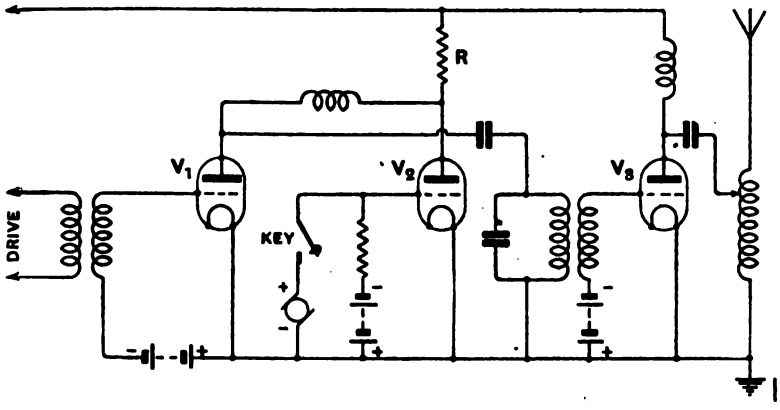

Fig. 9. *Keying method applicable to high power transmitters.* V_1 *is the intermediate magnifier,* V_3 *the main magnifier, and* V_2 *the absorbing valves.*

A method which satisfactorily incorporates this principle is set out in Fig. 9.

Here is shown a three-stage transmitter consisting of an independent drive, an intermediate magnifier, and the final or main magnifier, these two latter being supplied from a common source of high tension. The signalling apparatus comprises a bank of valves indicated as the absorber and a single contact key with associated sources of potential arranged so as to enable the absorber grids to be made positive or negative at will. A resistance *R* is seen to be common to the plate circuits of both the intermediate magnifier and the absorber, but not to the final magnifier plate.

Digitized by Google

This resistance is of such a value that the comparatively small plate current of the intermediate magnifier causes a voltage drop that does not prevent the required power being applied to this stage, so with the key open and the absorber grids consequently negative, the transmitter functions normally. When the absorber grids are rendered positive by closing the key, however, the intermediate magnifier is practically short circuited with the result that the plate current ceases immediately in the final magnifier, which it will be noted is provided with a fixed negative grid bias. By suitably proportioning the absorbing resistance and the absorbing valves any desired fraction of the main energy can thus be dissipated as a "spacing" load, with a consequent amount of relief to the dynamo windings from current fluctuations.

This article only deals with keying methods which have been used and are applicable to transmitters working on normal wavelengths, and at the present normal commercial speeds. The means and methods for obtaining the extraordinary high sending speeds possible with the modern short wave transmitters may form the subject of a future article when the experimental and patent work has been further developed.

Department of Scientific and Industrial Research. [R218

Transmissions of Wireless Waves of Standard Frequencies from the National Physical Laboratory (Station Call Sign 5HW).

DURING the last three years waves of accurately known frequency have been transmitted on the recommendation of the Radio Research Board of the Department, from the W reless Station at the National Physical Laboratory, to provide a means of checking the calibration of wave metres and other apparatus.

This transmission has consisted of eight waves covering a range of 360 to 60 kilocycles per second (833 to 5,000 metres wavelength). It is transmitted between the hours of 15.00 and 16.00 G.M.T. on alternate Tuesday afternoons.

In order to increase the usefulness of this service, arrangements have been completed, after consultation with the Post Office and others interested, for the present transmissions to be greatly extended. The new transmissions will include 16 waves. These will be transmitted in two sections, each section being transmiited once each calendar month. One part will be transmitted on the first Tuesday in the month between 15.00 and 16.00 G.M.T., while the other part will be transmited on the third Tuesday in the month between the same hours.

The system of the transmissions will be provisionally as follows :—

1. An announcement will be made in morse on plain C.W. on a wavelength of 1,500 metres that a transmission of standard waves is about to take place. This announcement will be made at 14.55 G.M.T.

2. Each standard wave will be transmitted as follows :—

(*a*) *Short Wave Programme on the first Tuesday in each month.*—The letter N followed by a number identifying the wave. This will be repeated three times and will then be followed by a dash lasting 40 seconds.

Four such dashes will be thus transmitted, each preceded by the identifying letter and number.

As far as possible the dash will begin at 20 seconds past the appropriate minute and will continue to the end of minute.

An interval of 4 minutes will elapse when the next wave of the series will be transmitted in exactly the same way.

(*b*) *Long Wave Programme on the third Tuesday in each month.*—This will be transmitted in exactly the same way as the Short Wave programme, but the identifying letter will be M. The actual programme is set out in Tables I. and II.

TABLE I.

SHORT WAVE PROGRAMME.

G.M.T.	Signal Transmitted.	Frequency, kC per sec.
14.55-15.00	Announcement in morse ...	200
15.00-15.04	N1, N1, N1,—40 sec. dash—transmitted 4 times ...	960
15.04-15.08	Silence	
15.08-15.12	N2, N2, N2,—40 sec. dash—transmitted 4 times ...	840
15.12-15.16	Silence...	
15.16-15.20	N3, etc., as above	700
15.24-15.28	N4, ,, ,, ...	580
15.32-15.36	N5, ,, ,, ...	500
15.40-15.44	N6, ,, ,, ...	360
15.48-15.52	N7, ,, ,, ...	300
15.56-16.00	N8, ,, ,, ...	260

Digitized by Google

During the pauses dashes may be heard whilst the settings and adjustments of the circuits to the next wave of the series are being made. These dashes must not be taken as part of the programme.

The announcement will consist of the general call-sign CQ de 5 HW repeated a few times and followed by the words "Short (or long) Standard wave frequency transmissions, stand by."

On one or two months in the year in which there are five Tuesdays an interval of three weeks will elapse between the transmission on the third Tuesday in that month and the next succeeding transmission.

TABLE II.

LONG WAVE PROGRAMME.

G.M.T.	Signal Transmitted.	Frequency, kC per sec.
14.55-15.00	Announcement	200
15.00-15.04	M1, M1, M1,—40 sec. dash—transmitted 4 times ...	200
15.04-15.08	Silence...	
15.08-15.12	M2, etc., as above	160
15.16-15.20	M3, ,, ,, ...	115
15.24-15.28	M4, ,, ,, ...	86
15.32-15.36	M5, ,, ,, ...	66
15.40-15.44	M6, ,, ,, ...	50
15.48-15.52	M7, ,, ,, ...	40
15.56-16.00	M8, ,, ,, ...	30

The frequencies transmitted will be highly accurate so that it will be unnecessary to transmit any corrections. The transmission of the actual frequency will therefore not take place, since the identifying letter and number serve this purpose.

The aerial current will be recorded but will not be transmitted. Information regarding the value of the current on any particular occasion will be given on request.

A few notes relative to the reception of these waves are appended.

Reception of Standard Waves.

It is presumed that the instrument under calibration by means of the waves is a self-generating valve oscillator of smoothly variable frequency. It is further essential that a tunable receiving set with detecting arrangements and headphones should be used in conjunction with the heterodyne source. The most accurate means of calibration is to set the heterodyne source until the beat tone heard between it and the incoming standard wave has a pitch equal to that of a small tuning-fork of known pitch. This will be unnecessary in the higher frequency waves but in the case of the longer waves the belt of frequency within which no beat tone is heard will represent more than one part in a thousand, whereas by using a definite beat tone of, say, 1,000 cycles per second the sensitivity of the receiving set will be high and the accuracy of setting will be much greater than can be read on the heterodyne unless it is of exceptional construction.

The frequency of the beat tone must, of course, be added to or subtracted from, that of the standard wave frequency according to which side the heterodyne source has been set. It is convenient to set the heterodyne first higher and then lower than the incoming wave using the tuning fork to obtain equality of pitch on the two sides. The frequency of the tuning fork need not then be known. The mean of the two readings on the heterodyne condenser corresponds exactly to the transmitted frequency.*

An examination of the frequencies included in the transmissions will reveal the fact that, except for a few frequencies far apart, they are not exact multiples of one another.

On this account it is possible to obtain calibrating frequencies intermediate between those actually transmitted. Thus on the long wave programme the heterodyne could be set at a frequency of 33kC. per sec. when the standard wave of 66kC. per second was under transmission. The second harmonic of the heterodyne at 66kC. per sec. will give a well defined beat with the standard wave of 66kC per sec.

The following intermediate frequencies can all be obtained in this manner without difficulty:—

Second Harmonics—33, 43, 57.5, 80, 100, 130, 150, 180, 250, 290, 350, 420, 480.

Third Harmonics—38⅓, 53⅓, 66⅔, 86⅔, 100, 120, 166⅔, 233⅓, 280, 320.

Further harmonics of the heterodyne source can be utilised, if desired, but the above series, together with the fundamental frequencies transmitted, enable nearly 50 calibration points to be obtained over the range of 10,000 to 320 metres covered by the transmissions.

Shorter wave heterodyne oscillators can, of course, be calibrated by the harmonics of an intermediate wave oscillator itself calibrated from the short standard waves. The length of the dashes and their number should enable the double adjustment to be made, first of the intermediate wave oscillator to the standard wave, and then of the short wave oscillator to the harmonic of the intermediate wave source. If this is done on one occasion no responsibility of constancy of frequency will rest upon the intermediate wave source.

The transmissions here announced will commence on 7th September with the short wave programme and will thereafter follow the sequence given.

17th August, 1926.

16, Old Queen Street,
Westminster, S.W.1.

* This assumes that over the range of condenser used there is a linear relation between capacity and frequency. If any other relation holds a small correction will be necessary to obtain the highest accuracy.

Digitized by Google

Radio-Wien.

The New High-power Vienna Broadcasting Station.*

By Prof. G. W. O. Howe, D.Sc. [R616·5

THE new broadcasting station at Vienna, which had been under construction for about a year, was formally opened on 30th January last. The importance attached to the occasion by the Telefunken Company, to whom the Austrian Company had awarded the contract for the complete station, is shown by the galaxy of well-known German radio engineers who were present at the function; these included Count Arco, Dr. Schapira, Dr. Rukop, Dr. Meissner, Dr. K. W. Wagner in addition to Dr. Bredow, who is the German Secretary of State, equivalent to our Postmaster-General.

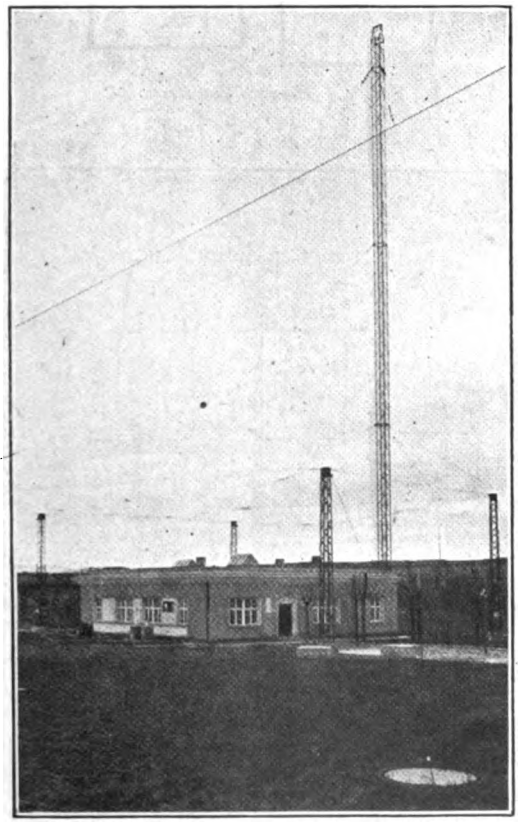

Fig. 1. *The station buildings.*

The station is erected over the old reservoirs on a hill (Rosenhügel) to the south of the city; the studio is in the city itself. The power is about ten times that of the old transmitter; for telegraphy the power supplied to the aerial on a long dash is 20kW, but for telephony this is reduced to about 7kW when not being modulated. The masts and buildings are actually erected over the arches and pillars of the reservoirs, as shown in Figs. 2 and 3. The site is considered to be a very favourable one. The three square

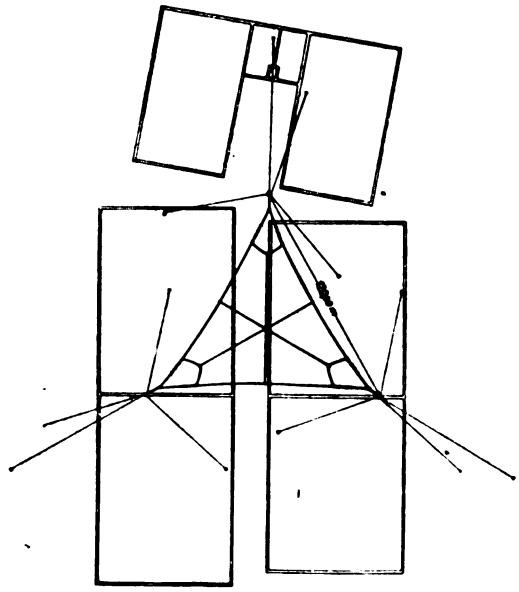

Fig. 2. *Plan of aerial.*

* From the information published in *Telefunken Zeitung*, Jan., 1926, and *Elektrotechnik & Maschinenbau*, 7th Feb., 1926, and from data kindly supplied by the Telefunken Co.

Digitized by Google

steel lattice masts ·85 metres high and of 4 ft. 7 in. side, are situated at the corners of an equilateral triangle of 120 metres side; each mast weighs 50 tons and is supported by three sets each of three stays; they are insulated from the earth by means of porcelain insulators.

The station building is of one storey, 18×18×4 metres, and is connected by a special cable with the studio in the city.

The flat triangular aerial (Fig. 2) of stranded phosphor bronze wire has a 6-wire sausage-type down lead to the buildings which are situated symmetrically below the aerial. The earth-screen or counterpoise (Fig. 3) consists of a large number of radial wires carried by 12 posts at a height of 8 metres. The aerial capacity is about 1,500 cms., and its natural wavelength about 500 metres. It is tuned to the desired working frequency by a set of shortening condensers operated by a multiple contact switch (10)* and more accurately by a variometer; the aerial also contains the secondary

* These numbers in brackets refer to the various items in Fig. 6.

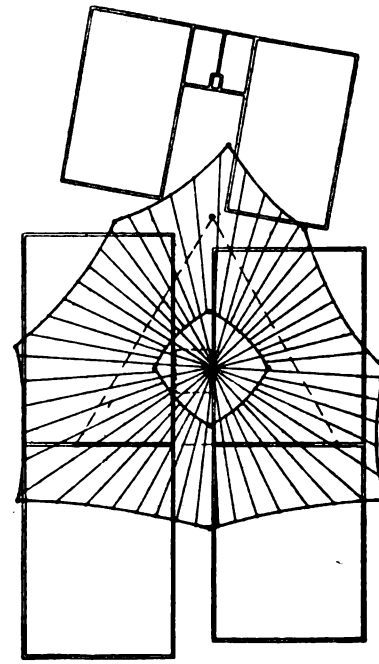

Fig. 3. *Plan of counterpoise.*

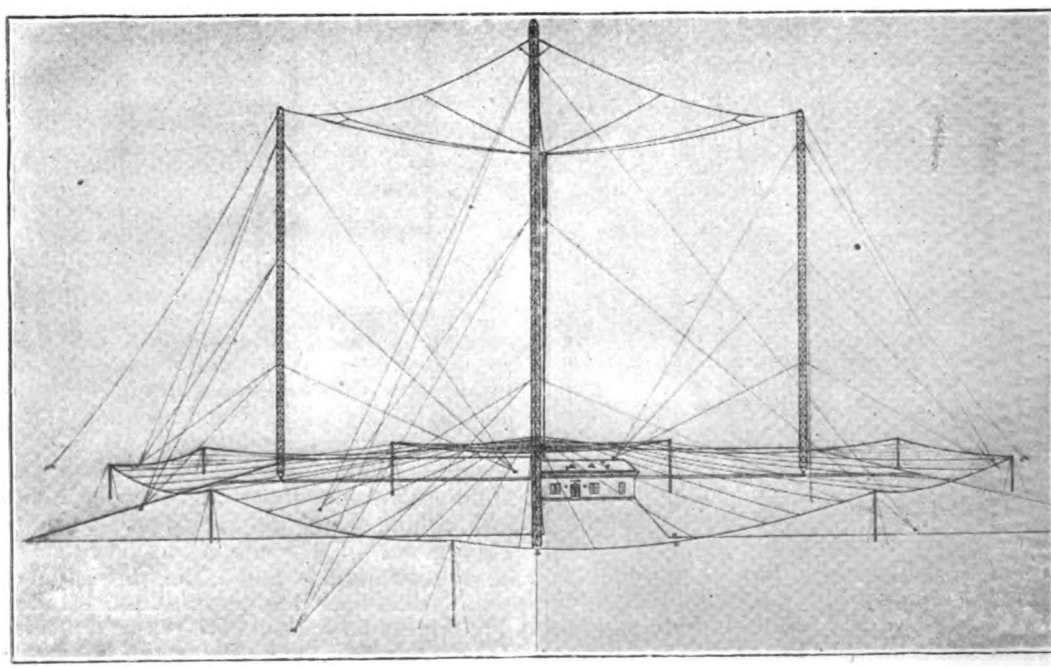

Fig. 4. *Schematic view of aerial and counterpoise.*

Digitized by Google

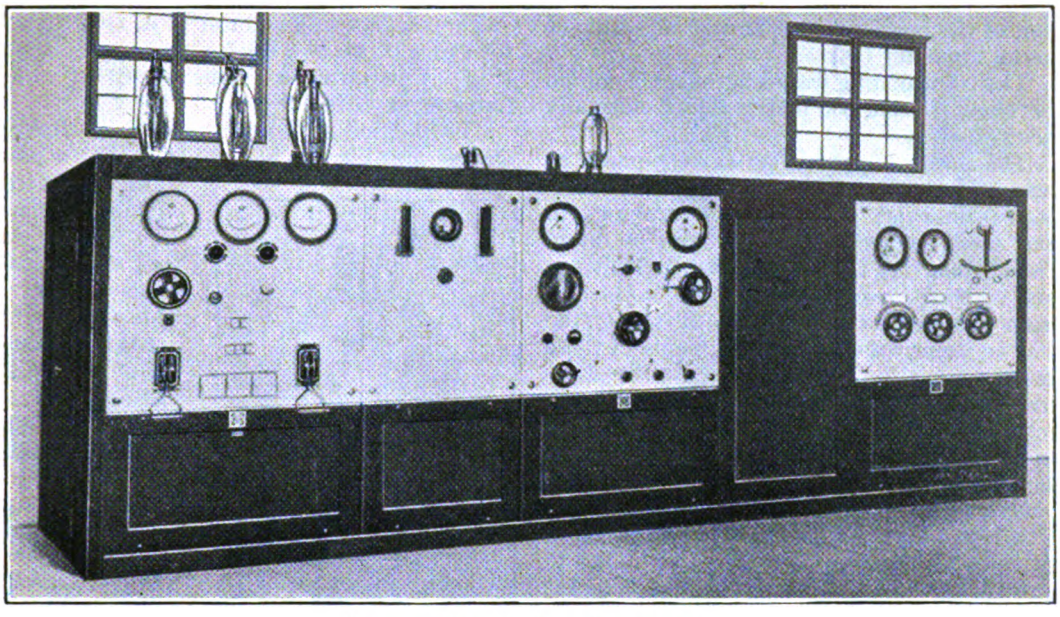

Fig. 5. *General view of transmitter.*

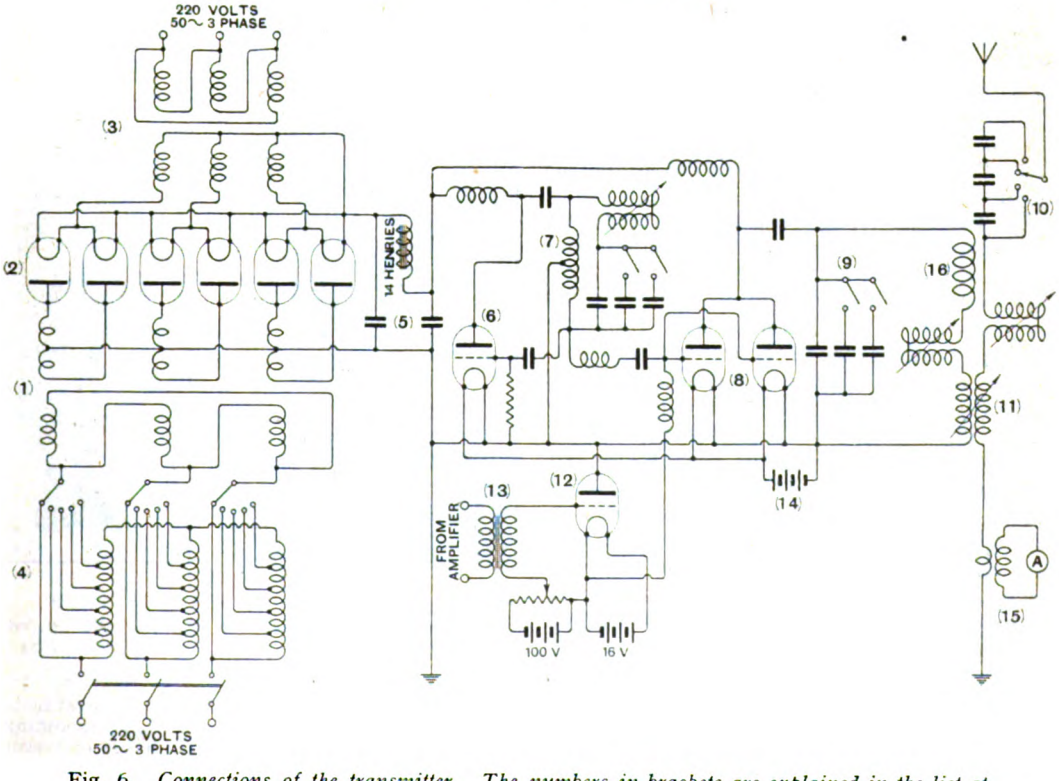

Fig. 6. *Connections of the transmitter. The numbers in brackets are explained in the list at the foot of the next page.*

Digitized by Google

coil of the coupling transformer (11) and the aerial ammeter (15).

The transmitting wavelength can be varied between 450 and 900 metres, but is normally 582.5 metres.

The power supply is 50 cycle 3-phase at 220 volts; it passes through an auto-transformer (4) with multiple tappings to the mesh-connected primary of the main transformer (1) the secondary of which has six windings, each giving 8,800 volts and each connected to the anode of one of the six rectifying valves. The filaments of these rectifying valves (2) are heated with alternating current from the step-down transformer (3), each filament taking 16 amperes at 32 volts and giving a total electron emission of about 3 amperes. The rectifying valves (Fig. 7) are the Telefunken Type RG61, suitable for continuous voltages up to 20,000, but in the present case the anode voltage is only 10,000. The total direct current power required is about 28 kilowatts, *i.e.*, 2.8 amperes at 10,000 volts, so that the average current per rectifier is only 0.47 ampere; the emission current of 3 amperes is necessarily much greater than this because each valve only passes current during a fraction of the cycle. By means of the tapped auto-transformer the voltage supplied to the main transformer can be reduced from 220 down to 90 volts.

The two smoothing condensers (5) are paper condensers of $4\mu F$ each and the smoothing choke coil of 14 henries has an open iron core to prevent the continuous current from magnetising it too strongly and thus reducing its inductance to the ripple frequency.

The oscillations are produced by the valve (6) and the circuit (7), the main power valves (8) acting as amplifiers with a tuned anode circuit (9) to which the aerial is coupled by the transformer (11). The amplified speech current received from the studio acts through the transformer (13) on the modulating valve (12) which varies the potential of the grids of the main power valves, and thus modifies their power to amplify the output of the oscillating valve (6).

The oscillation generator is a 1kW valve for 10,000 volts, Telefunken type RS47 (Fig. 8) requiring a filament current of 8 amperes at 16 volts.

The method of back coupling is clearly shown in Fig. 6. To vary the wavelength the condenser can be varied in six steps, and the inductance can be varied continuously by means of a variometer with a range from 15,000 to 80,000 cms., the fixed inductance being 160,000 cms. (1 microhenry = 1,000 cms.).

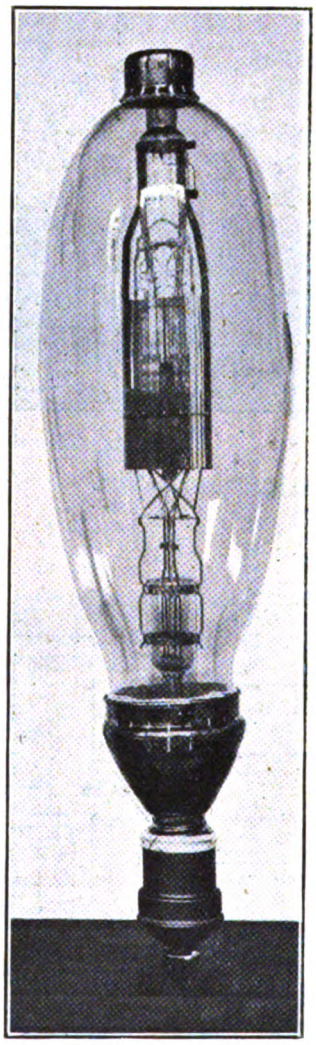

Fig. 7.
The rectifying valve RG61.

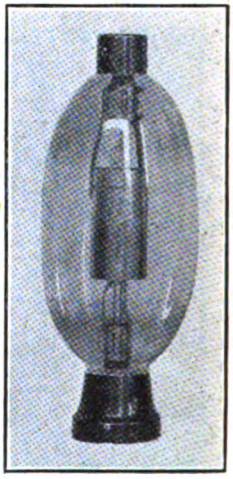

Fig. 8.
The oscillation generator valve RS47.

Explanatory details to transmitter connections given in Fig. 6: (1) Main transformer, (2) Rectifiers, (3) Filament heating transformers, (4) Tapped auto-transformer for varying the power, (5) Smoothing condensers, (6) Oscillator valve, (7) Oscillator valve circuit, (8) Main power valves, (9) Circuit of power valves (intermediate circuit), (10), Antenna shortening condenser, (11) Antenna coupling transformer, (12) Modulating valve, (13) Modulating transformer, (14) Valve filament heating battery, (15) Aerial ammeter, (16) Toroidal inductance.

Digitized by Google

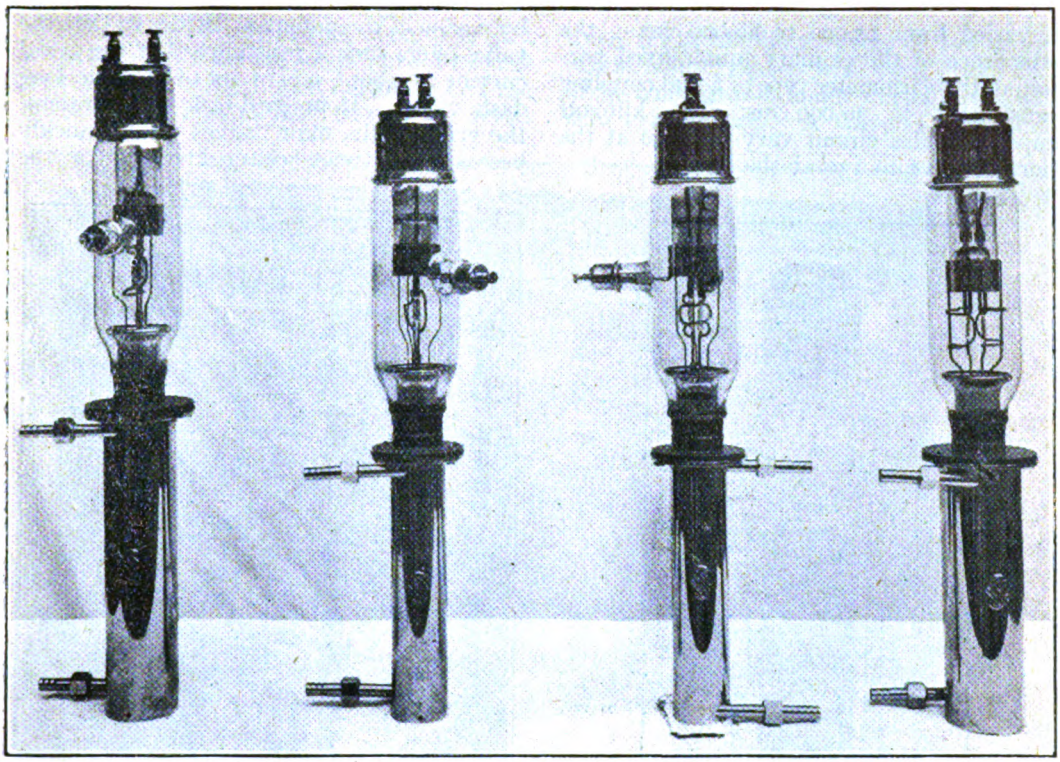

Fig. 9. *Water-cooled power valve RS204.*

The power valves are the Telefunken Type RS204, with water-cooled copper anodes (Fig. 9); the grid connection being brought out through the side of the glass cap of the valve. Each valve takes a filament current of 2.5 amperes at 35 volts and gives an emission of about 6 amperes. When giving an output of 10kW the valve has an efficiency of about 75 per cent., excluding the filament power. Two valves operate normally in parallel. It is to be noted that the power required for heating the filaments of the oscillation generating and main power valves, is obtained from accumulators, two 40 volt batteries of 1,000 ampere hours capacity being provided for the purpose, one being in use while the other is being charged; either is sufficient for 15 hours service, whereas the charging dynamo can recharge it in five hours.

The capacity of the anode circuit consists of a number of Dubilier mica condensers which can be switched in and out to vary the wavelength, the intermediate adjustment being made by means of a variometer. The main inductance takes the form of a toroidal coil (16) with an outer diameter of 40 cms., an inner diameter of 20 cms., and a length of

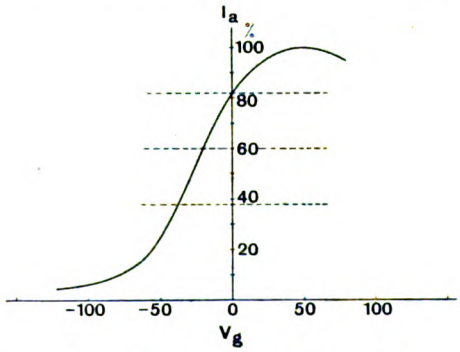

Fig. 10. *Curve showing the relation between the aerial current and the grid voltage of the modulating valve.*

14 cms., wound with multiple stranded wire (Litzendraht) and having an inductance of 70,000 cms. The variometer inductance can

Digitized by Google

be varied from 15,000 to 80,000 cms.; the inductance of the primary (outer fixed portion) of the variometer type of aerial coupling transformer is 30,000 cms. The kilovolt amperes of this circuit vary from 90 at the shortest wave to 130 at the longest.

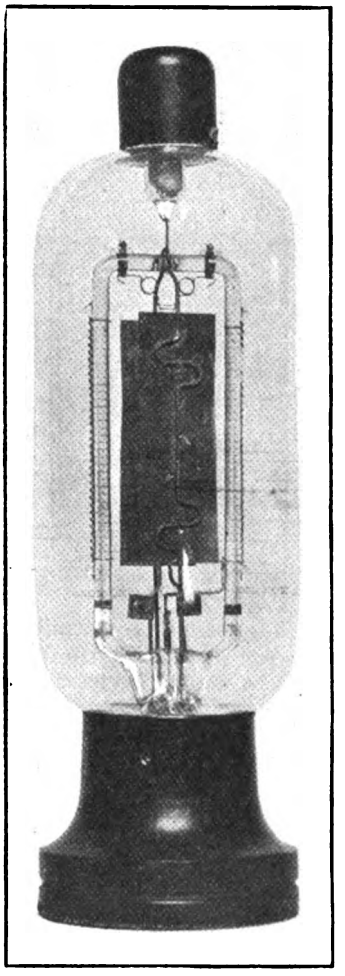

Fig. 11. *Modulating valve RV24.*

As we have already pointed out, the oscillation generator is unaffected by the modulation and delivers an effective high frequency P.D. of 600 volts to the grids of the power valves through a b'ocking condenser. The modulation valve (12) acts as a variable leak to these grids. In the absence of speech the grid of the valve (12) is adjusted by means of the potential divider so that the valve offers such a resistance that the aerial current is about 0.6 of its telegraphic long dash value. If no grid-leak were present, the grids of the main valves would quickly become negatively charged owing to the

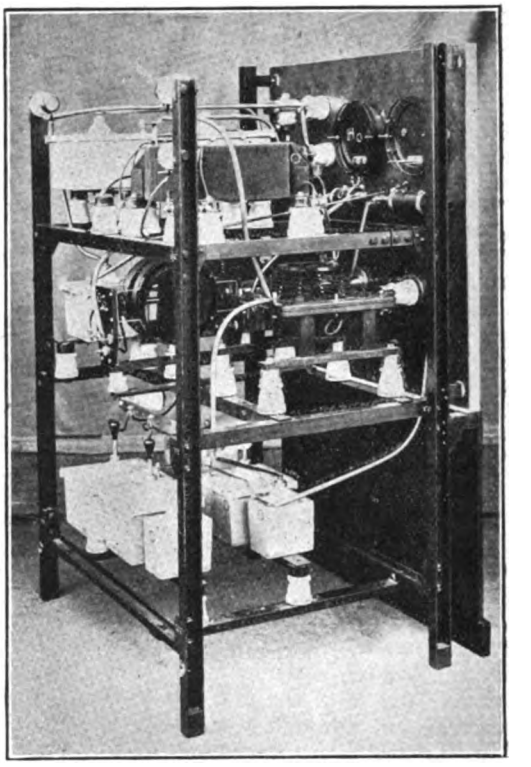

Fig. 12. *Back view of panel for control of main anode and aerial currents.*

electrons attracted to them whenever they were positive, and this negative charge would reduce the aerial current to about 1.5 per cent. of its normal value. This is an extreme case but any increase in the resistance of the modulating valve acts in this direction and reduces the aerial current. On the other hand, any decrease in the resistance makes the grids less negative and increases the aerial current. The relation between the aerial current and the grid voltage of the modulating valve is shown in Fig. 10; if the speech current momentarily lowers the grid potential to —100 volts, the resistance of the modulating valve becomes so high that the aerial current falls to a very low value,

Digitized by Google

whereas if the speech current makes the grid potential +50 volts the aerial current reaches its maximum value. As a matter of fact the modulation is only allowed to vary the aerial current between about 0.4 and 0.8 of its maximum possible value, corresponding to a variation of ±35 per cent. from its mean value, as any greater modulation causes defective quality. The modulation range is indicated by the dotted lines in Fig. 10.

Two valves in parallel are actually employed for modulation; they are Telefunken Type RV24 amplifier valves of low amplification factor, that is with open grids, which allow considerable anode current to pass at zero grid voltage. A valve of this type is shown in Fig. 11; the filaments are heated from one of two special 16-volt batteries. Fig. 5 shows the control switchboard. The left hand panel controls the rectifiers, transformers, etc.; the six rectifier valves can be seen above the panel which carries a supply voltmeter, an H.T. anode voltmeter, the anode ammeter, a hand-wheel controlling the

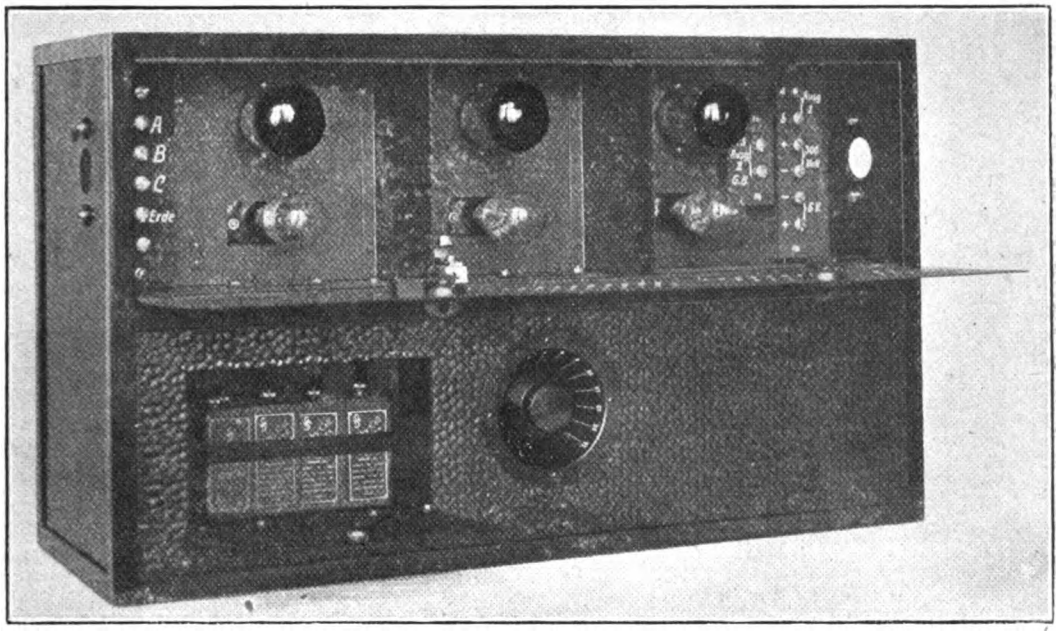

Fig. 13. *Three-stage microphone amplifier.*

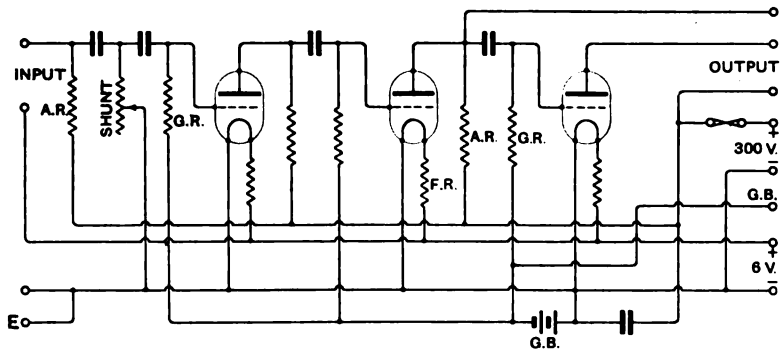

Fig. 14. *Connections of the 3-stage microphone amplifier.*

Digitized by Google

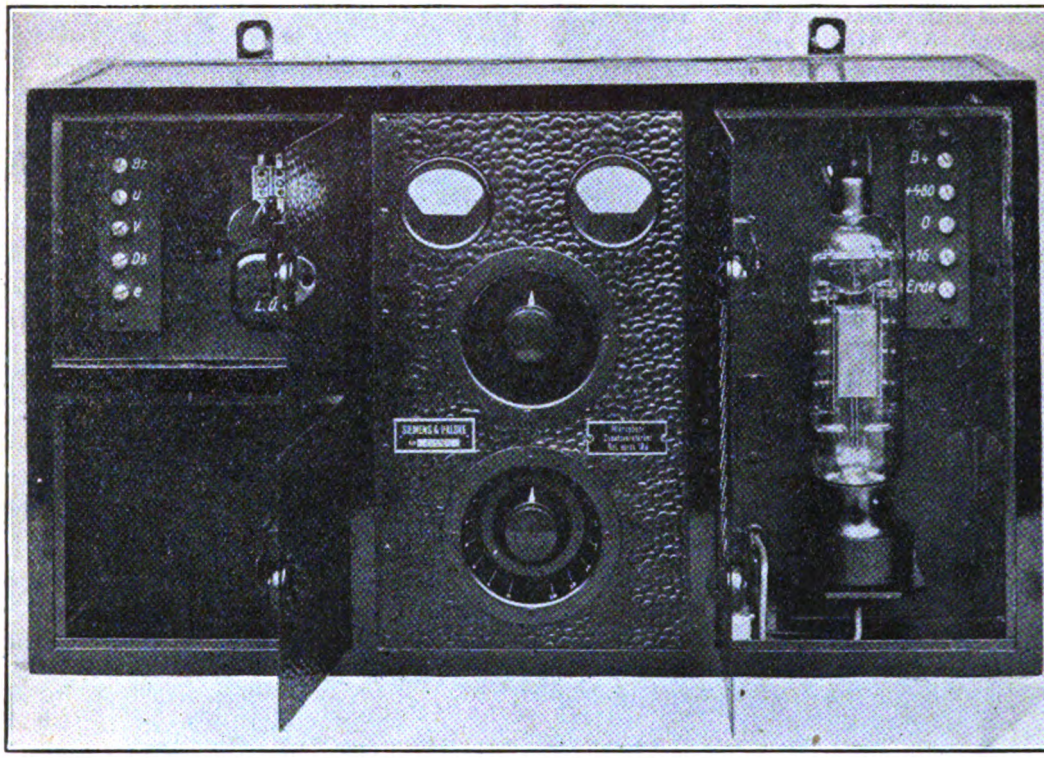

Fig. 15. *Additional 4th stage amplifier.*

tapping switch from the auto-transformer and the supply switches which are automatically opened on opening the doors behind the

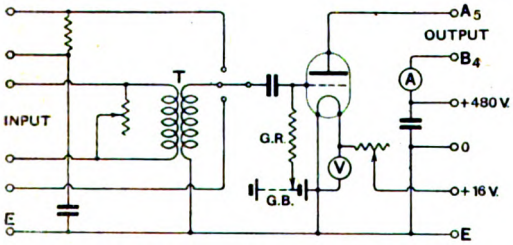

Fig. 16. *Connections of the additional 4th stage amplifier.*

switchboard. The second panel is for the control of the cooling water, the third for the oscillation generator and main power valves, and that on the right for the intermediate or main valve anode circuit and the aerial control. Fig. 12 shows a back view of the latter panel.

Adjoining the studio in Vienna are the necessary rooms for the amplifiers, batteries, and auxiliary machines for battery charging. The apparatus comprises :—

1. The microphone.
2. (*a*) Three-stage amplifier.
   (*b*) Single-stage additional amplifier, both being resistance coupled.
3. Amplifier modulation meter
4. Transmitter modulation meter.

The three-stage amplifier has BO valves, it is shown in Fig. 13 and the connections can be seen from Fig. 14. The single-stage additional amplifier which follows the former has an RV24 valve, it is shown in Fig. 15 and its connections in Fig. 16.

The modulation meter shown in Figs. 17 and 18 enables the adjustment of the amplifier to be controlled so that the correct strength of speech current is sent through the cable to the transmitting station. It is really a

Digitized by Google

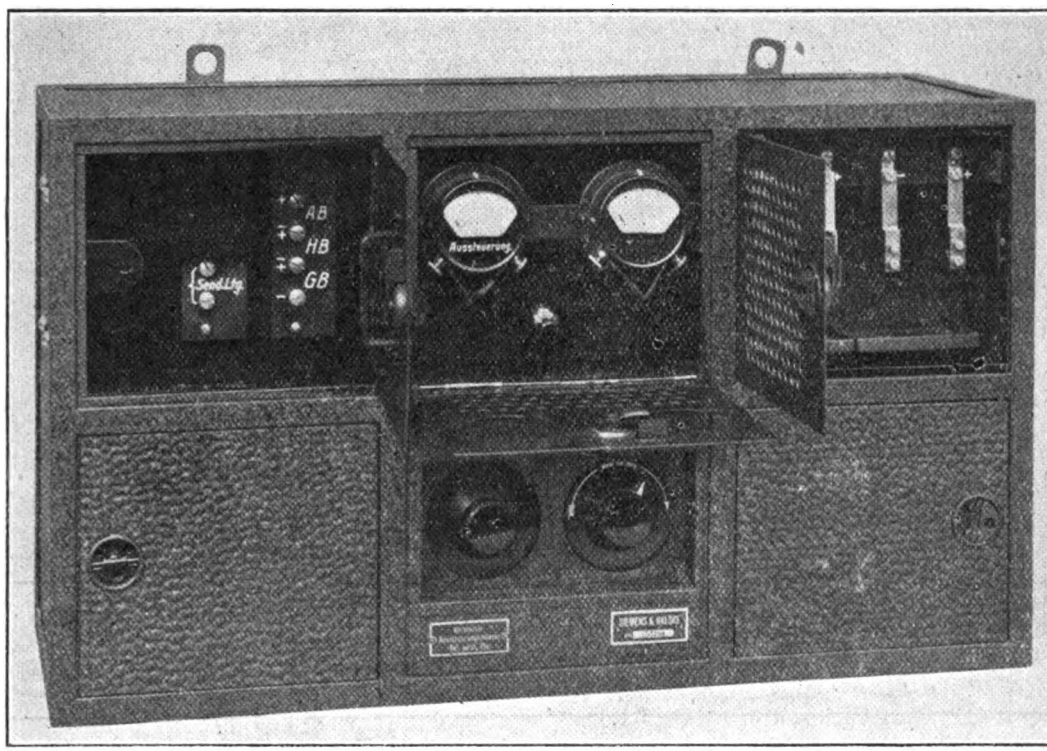

Fig. 17. *Amplifier modulation meter.*

kind of valve voltmeter. The other modulation meter shown in Figs. 19 and 21 is also in the amplifier room at the studio, but is

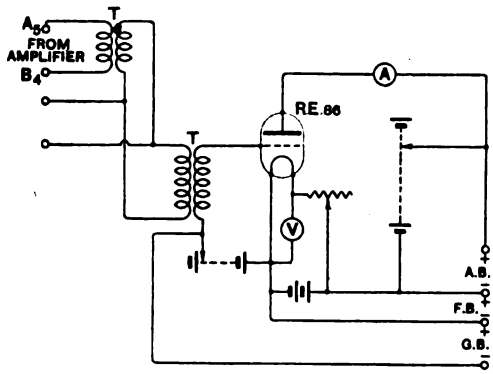

Fig. 18. *Connections of the amplifier modulation meter.*

operated by currents transmitted through the cable from the transmitting station. It enables a watch to be kept on the modulation of the aerial current. The current, induced from the aerial circuit in a suitably placed coupling coil, is rectified in the full wave rectifier shown in Figs. 20 and 22 which is at the transmitting station; the rectified currents are then taken through the cable to the modulation meter in the studio.

Special care has been devoted to the cable which connects the transmitter with the studio in Vienna. The length of this cable is about six miles, but further connections with the opera house and concert halls are to be installed. The cable has 12 conductors of 0.8 mm. diameter and 8 conductors of 1.03 mm. diameter. The former constitute six metallic signal circuits arranged as three groups each of 4 conductors; the latter constitute four metallic speech circuits. They are all paper insulated air space cores and the separate speech circuits are wound with aluminium foil with bare copper wire wound over. The complete cable core has a diameter of 18 mm., the overall diameter of the hoop-iron armoured and asphalted cable is 32 mm. The speech circuits have a resistance of 40 ohms per kilometre and a

Digitized by Google

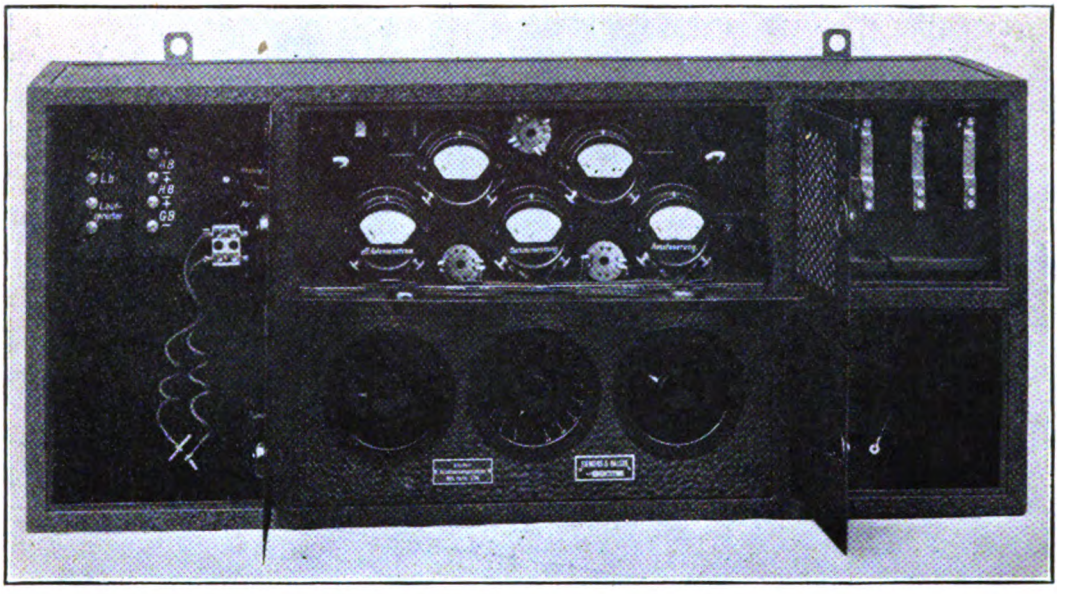

Fig. 19. *Transmission-modulation meter.*

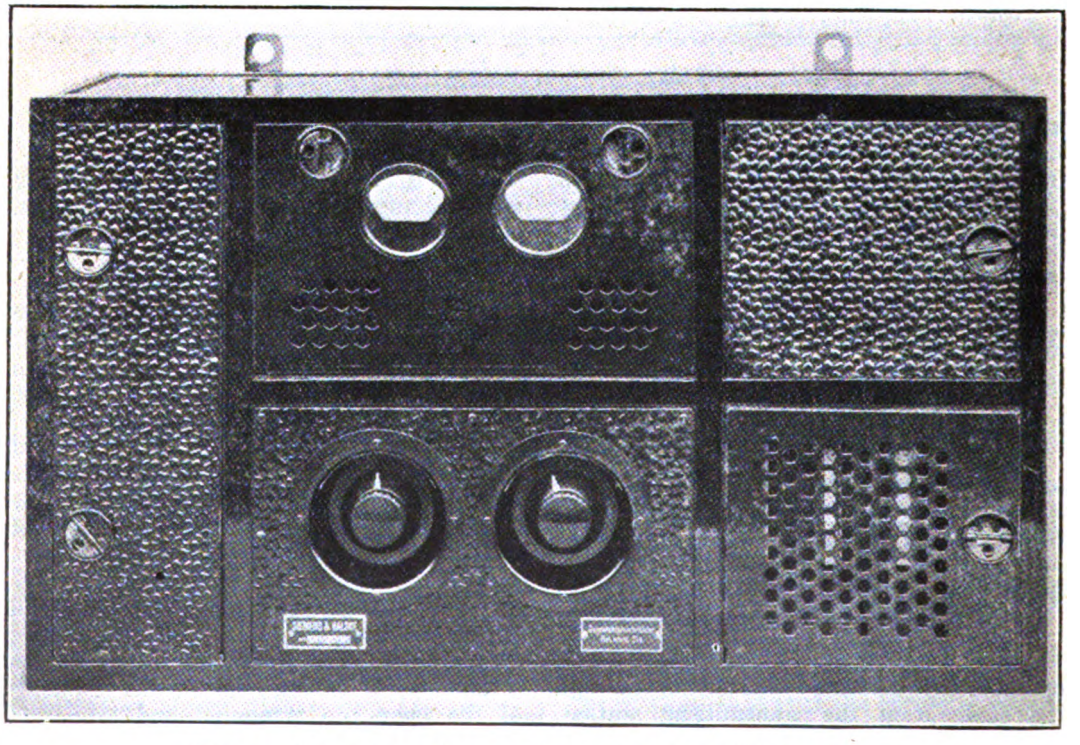

Fig. 20. *Full wave rectifier operating transmission-modulation meter.*

Digitized by Google

capacity of 0.034μF per kilometre; they are slightly loaded by means of Pupin coils and the capacities have been carefully balanced to a high degree of accuracy. This has given an improved quality of transmission. There are five loading points in the length of 9.8 kilometres and the inductance of the coils is 0.016 henry. As the result of this loading the damping constant βl increases almost linearly from 0.3 for $\omega = 3{,}000$ to 0.4 for $\omega = 25{,}000$. Beyond $\omega = 62{,}000$ the damping increases very rapidly. The characteristic impedance of the cable is practically constant at 570 ohms between $\omega = 5{,}000$ and $\omega = 25{,}000$. The amplifiers give a slightly higher amplification on the higher frequencies, thus counteracting the slight increase of damping in the cable. The cable is protected from external inductive influence by the metallic wrappings around the circuits and by the six bare copper wires which are in parallel with the lead covering. The cable was designed and supplied by Messrs. Siemens & Halske and the Austrian Siemens-Schuckert Co.

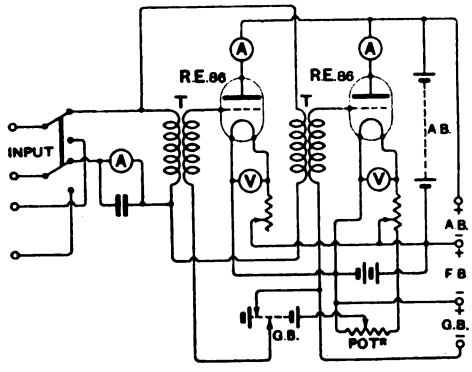

Fig. 21. *Connections of the transmission-modulation meter.*

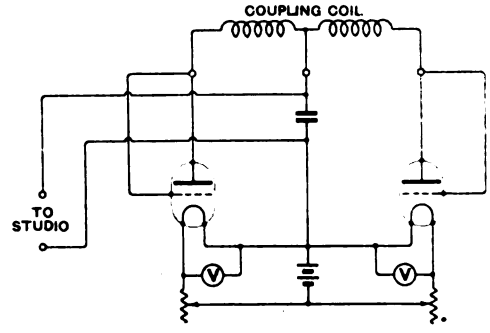

Fig. 22. *Connections of the full wave rectifier.*

The Rugby Radio Station.

THE lecture given by Mr. E. H. Shaughnessy, M.I.E.E., on the Rugby Radio Station before the Radio Society of Great Britain on 23rd June, 1926, is not reported in *E.W. & W.E.*, by arrangement with the author and the Radio Society of Great Britain.

The lecture was, as the author announced at its commencement, a *résumé* of his paper read before the Institution of Electrical Engineers. The Institution Paper was abstracted fully in the issue of *E.W. & W.E.* for May, 1926, whilst the illustrations reproduced there are substantially the same as the pictures exhibited by Mr. Shaughnessy by means of lantern slides before the Radio Society.

Digitized by Google

An Ammeter Panel.

Using an Ammeter for Several Purposes.

By E. C. Atkinson. **[R251**

This note describes a panel for ammeter arranged for full-scale readings of 3, 0.6 and 0.024 amperes as well as of 3 and 12 volts. The charging current for the accumulator is shown on one scale, whilst filament current up to 0.6A is shown on another *without change of connections.*

METHODS for using a single instrument for more than one purpose have recently been described in this journal. The writer needed an ammeter for measuring filament currents up to 0.56A and a charging current of 2A. A moving-coil instrument with full-scale reading of 24mA was selected together with suitable shunts.

Negative leads to filaments and charger are connected direct to the battery, and positive terminals are joined to ammeter and shunts as shown in Fig. 1 (a).

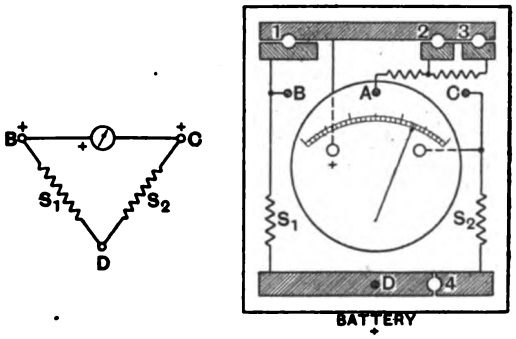

Fig. 1.

When charging, the accumulator S_2 is in series with the ammeter whilst S_1 is shunted across them. When the battery is being discharged through the filaments S_2 becomes the shunt across ammeter and S_1 in series.

With suitable resistances for S_1 and S_2 it is thus possible to charge and discharge without alteration of circuits and to secure, for full-scale reading on the instrument, 3A in the first case and 0.6 in the second.

The resistances consist of the shunts supplied by the makers for use in the ordinary way, increased in each case by 0.0011 ohm.

The ammeter is mounted on a panel as shown in Fig. 1 (b), connections to outside circuits being made by plugging into holes *A B C* and *D*. When the gaps 1 and 4 are bridged by plugs, such as are used in resistance boxes, it will be seen that the connections are as in Fig. 1 (a).

A is connected to different terminals of the accumulator by a wander plug. When the plug in gap 1 is moved to 2 the instrument records voltage with full-scale reading of 3V. Using gap 3 the corresponding value is 12V. Meanwhile the filament current is passed by S_2.

Further, if battery and filament plugs are removed from the panel and connected together, the instrument is available for measuring currents in other circuits. When the plug is removed from gap 4, full-scale reading represents 24mA and anode currents can be observed.

It will be seen that the instrument is not sufficiently sensitive for accurate measurements of these currents in an ordinary receiving valve, but the saturation current can satisfactorily be measured and assistance is afforded for setting on a suitable point of the characteristic by adjusting H.T. voltage.

On the other hand, the saturation current of a power valve may exceed 24mA, and the instrument is suitable for reading the anode currents passed by such a valve in use. Observations of the movements of the needle during loud-speaker reception afford a useful means of adjusting grid and anode voltages so as to secure the best results.

The various ranges and the corresponding arrangements of terminals and plugs are shown in the following table.

Use.	Range.	Terminals.	Plugs.
Ammeter	24mA	*B—C*	1
,,	0.6A	*C—D*	1—4
,,	3A	*B—D*	1—4
Voltmeter	3V	*A—D*	2—4
,,	12V	*A—D*	3—4

Digitized by Google

The Amplification and Selectivity of a Neutralised Tuned Anode Circuit.

By N. W. McLachlan, D.Sc., M.I.E.E. **[R161 & R162**

Preliminary.

IN view of the favour which the neutrodyne principle has found in the design of modern receivers, it may be of interest to consider some of the features associated with the magnification and selectivity of the arrangement. The simplest way is to deal with a tuned anode. The treatment also covers the case of 1 to 1 transformer coupling with tuned grid, provided the leakage between primary and secondary is small. It often happens that the ratio exceeds unity and in some instances the H.T. is fed to the coil at a tapping point between the extremities. For a given magnification the selectivity

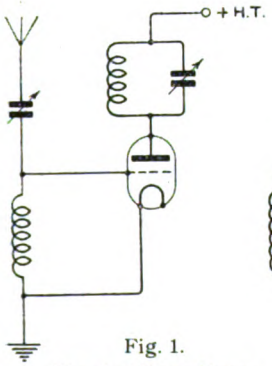

Fig. 1.
Showing the ordinary un-neutralised tuned anode.

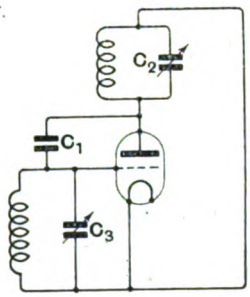

Fig. 2.
Showing the circuit equivalent to Fig. 1.

can be enhanced in this way. These cases require modified treatment and are not included here.

Let us glance at the circuit illustrated in Fig. 1. It is so familiar and is likely to be a bit of past history soon. The arrangement in question is the "tuned anode." There is no attempt at neutralisation of the valve capacity. This capacitative attribute is used to attain enhanced sensitivity and selectivity at the expense of stability. Now the sensitivity arises from an inherent tendency to oscillation possessed by the system. It increases with augmented aerial and anode inductances and with reduced resistances of same. Assuming the resistance of the grid-leak to the succeeding valve to be large in comparison with the impedances of the other components, its effect as a damper across the valve can be neglected. Moreover, the circuit may be redrawn, as shown in Fig. 2, where the condenser C_3 between the grid and the filament negative is assumed to represent the equivalent aerial capacity and the small condenser C_1 is the valve capacity. The H.T. and L.T. batteries have been omitted.

It is quite easy to see that any potential variations between the grid and filament are transmitted to the anode by C_1. Furthermore, if the tuning adjustments are correct, thereby giving the proper phasing, and the inductances are ample, the system will be regenerative and oscillation will ensue. There is clearly an art in the design of a circuit of this nature to get smooth operation, so that tuning is not beset by a series of "flops" into oscillation as the condensers are rotated. This tendency is curbed by the aerial damping, but for the set to run serenely into oscillation requires certain modification if a band of wavelengths is to be covered.

Perhaps it may be of interest if this circuit is compared with one well known for short-wave oscillation. As a matter of fact, quite satisfactory oscillation can be got with a circuit of this nature at long wavelengths. This is well known when a cascaded amplifier oscillates. The oscillations are then certainly "unsatisfactory." The circuit in question is indicated in Fig. 3 where C_1 represents valve capacity plus

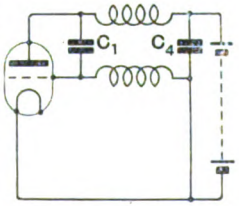

Fig. 3. *A well-known short wave circuit for generating oscillations. The circuit is identical with Fig. 2 if C_4 is large and if C_2 and C_3 are omitted from the latter figure.*

Digitized by Google

added capacity to vary the wavelength. In Fig. 4 is shown two arrangements of the same circuit. Diagram (a) shows C_4 short-circuited, *i.e.*, C_4 is infinity. This arrangement would work if the H.T. battery did not polarise the grid and render the valve *hors de combat*. The condenser C_4 of Fig. 3 serves the purpose, therefore, of preventing the H.T. getting on the grid and causing saturation of the valve. When C_4 is large enough, it acts as a by-pass condenser on the H.T. battery. It can, of course, be made variable to obtain accurate tuning when C_1 is small in comparison. So far as preserving the grid from polarisation is concerned, it is possible to insert a condenser, as shown in (b). This, however, completely isolates the grid and is useless. We are therefore brought back on the arrangement of Fig. 3.

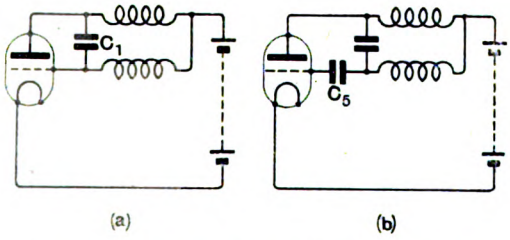

Fig. 4. *Showing (a) Fig. 3 with* C_4 *infinite and (b) a condenser* C_5 *to prevent polarisation of the grid by the H.T. battery.*

Reverting to our original tuned anode circuit, if we incorporate the H.T. battery with a shunting condenser, the result is depicted in Fig. 5 (a). Then by adding condensers across the coils of Fig. 3 we get Fig. 5 (b) which is identical with Fig. 5 (a). Put in another way, if we imagine the condensers C_2 C_3 of Fig. 5 (a) gradually to decrease to zero the circuit ultimately resolves itself into Fig. 3.

Magnification with Neutralised Tuned Anode.

The next aspect of our subject is related to the magnification obtainable from a tuned anode. Where neutralisation of the valve capacity is not effected, the magnification depends upon so many conditions which vary from receiver to receiver that a computation would be unsatisfactory. On the other hand if we assume complete neutralisation of the valve capacity and that there are no extraneous influences, *e.g.*, direct pick up on the anode coil, interaction between the coil and the remainder of the circuit, stray capacities, etc., the problem resolves itself into one capable of computation. In Fig. 6(b), we have the usual tuned anode followed by some form of coupling to the next valve

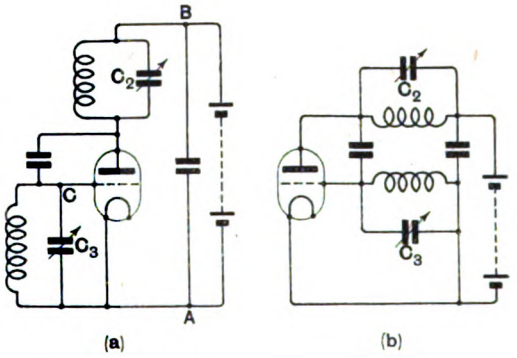

Fig. 5. *Illustrating the similarity of circuits of Figs. 2 and 3.*

which may or may not be a detector. If the resistance of the grid-leak be large enough compared with the valve resistance, it can be neglected. The simplified equivalent circuit is shown in Fig. 6 (c). Here A represents an alternator whose voltage is equal to the E.M.F. between grid and filament multiplied by the magnification factor of the valve. The tuned anode is connected in series with the alternator and with a resistance ρ equal to the internal resistance of the valve. Obviously the voltage across C cannot exceed that of the alternator (e). Actually it is always less than e due to the ohmic drop down ρ, *i.e.*, due to the internal resistance of the valve. The voltage across C (Fig. 6 (c)) is applied to the grid and filament of the next valve without reduction provided the coupling condenser C_1 of Fig. 6 (b) is free from loss and its impedance is small compared with the grid-leak r_1. Assuming this to hold good, as it ought in a properly designed set, the voltage across C is given by the quantity $e \times$ vector sum of impedance of ρ and of $L\ C\ R$. Taking the tuned circuit first, there are two branches in parallel and if we get the admittance of each and add, the reciprocal of the sum will be the combined impedance.

Digitized by Google

Admittance of inductive branch is $1/R+j\omega L$ where $j=\sqrt{-1}$ and $\omega=2\pi f$. Admittance of condenser branch is $j\omega C$. Adding these two quantities we get

$$\text{Admittance} = (1/R+j\omega L) + j\omega C \quad .. \quad (1)$$

$$= \frac{1+j\omega CR-\omega^2 LC}{R+j\omega L}$$

$$= \frac{A+j\omega CR}{R+j\omega L} \quad .. \quad .. \quad (2)$$

where $A = 1-\omega^2 LC$.

This formula shows that the tuned circuit at resonance is equivalent to a condenser of capacity C in series with a resistance L/CR as depicted in Fig. 7 (a). In Fig 7 (b) is shown the vector diagram for the circuit of Fig. 7 (a). At the radio frequencies which obtain in Broadcasting, $1/\omega C$ is usually small compared with L/CR, so that for all practical purposes, unless a really bad coil is used, the impedance of the tuned circuit at resonance can be regarded as that of an inductionless resistance of value L/CR. The condition

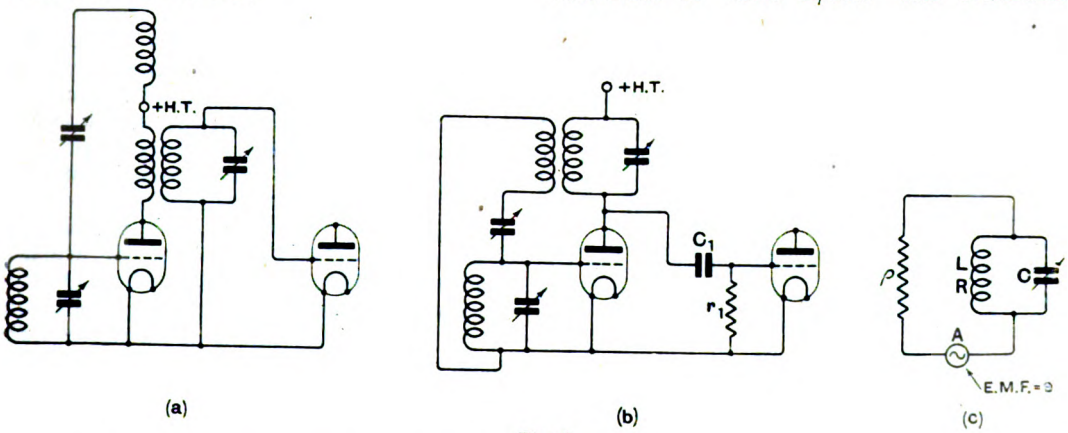

Fig. 6.

(a) *Showing transformer coupling with neutralising condenser.*
(b) *Neutralised tuned anode with condenser resistance coupling to next valve.*
(c) *Circuit equivalent to anode circuit of first valve in (a) or (b) where ρ represents the internal resistance of the valve.*

Hence Impedance $= 1/\text{Admittance}$

$$= \frac{R+j\omega L}{A+j\omega CR} \quad .. \quad .. \quad (3)$$

Now at resonance $\omega^2 LC = 1$ or $\omega^2 LC - 1 = 0$; hence $A=0$.

Thus at resonance the impedance is given by

$$\frac{R+j\omega L}{j\omega CR} = 1/j\omega C + \frac{L}{CR} \quad .. \quad (4)$$

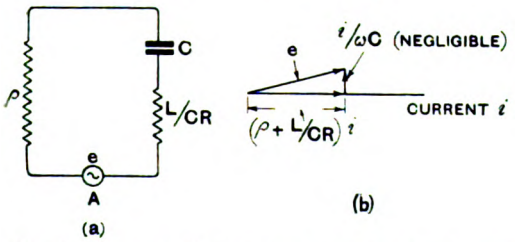

Fig. 7. *Showing that at resonance the tuned anode combination is equivalent to a condenser* C *in series with an inductionless resistance* L/CR, *the whole being in series with* E.M.F., e *and valve resistance* ρ.

$\omega^2 LC = 1$ signifies resonance of the tuned circuit, but as we have seen, the equivalent circuit is a condenser of capacity C in series with a resistance L/CR. Now it is possible to adjust the value of the condenser so that the circuit acts purely as a non-inductive resistance. To obtain this condition it is necessary to equate the reactance to zero. By rationalising the denominator of equation (3) we get

$$Z = \frac{R+j\omega(AL-CR^2)}{A^2+\omega^2 C^2 R^2} \quad .. \quad (5)$$

so that for zero reactance (unity power factor)

$$AL - CR^2 = 0$$

$$\therefore \quad (1-\omega^2 LC)L = CR^2$$

$$\text{or} \quad \omega^2 LC = 1 - \frac{CR^2}{L} \quad .. \quad (6)$$

At resonance $\omega^2 LC = 1$, so that for zero reactance the value of $\omega^2 LC$ is decreased by

Digitized by Google

CR^2/L. Taking $C = 150\mu\mu F$, $R = 7$ ohms, $L = 250\mu H$, we get

$$CR^2/L = \frac{150 \times 10^{-12} \times 49}{250 \quad 10^{-6}} \doteqdot 3 \times 10^{-5}$$

Thus the variation is only three parts in one hundred thousand and can therefore be neglected. So far as varying the condenser C is concerned, to come into tune with an incoming signal of definite wavelength (ω fixed) we have at resonance

$$\omega^2 LC = 1 \text{ or } C = 1/\omega^2 L,$$

and for zero reactance

$$C = \frac{1}{\omega^2 L + R^2/L}$$

Since R^2/L is small compared with $\omega^2 L$ it can be neglected, so that $C \doteqdot 1/\omega^2 L$ and the variation in C at resonance and at zero reactance is beyond the limit of practical consideration at wavelengths of 300 to 500 metres.

Applying our previous formula to find the voltage across the tuned circuit at resonance (L/CR = a res.) we have

$$e_2 = e\frac{L}{CR} \cdot \frac{1}{\frac{L}{CR} + \rho}$$

$$= e\left[\frac{1}{1 + \frac{CR\rho}{L}}\right]$$

or effective magnification per stage

$$= \frac{m e_2}{e} = \frac{m}{1 + \frac{CR\rho}{L}} \quad .. \quad (7)$$

where m is the magnification factor of the valve.

Having obtained this simple formula (7), the next step is to discover how the effective magnification per stage with a given coil varies with the wavelength of the tuned circuit. Assume that over a band of wavelengths from 300 to 500 metres the ratio L/R is sensibly constant and that $R = 7$ ohms, $L =$ 250 microhenries, $m = 7$, $\rho = 22{,}000$ (D.E.3 valve). The only variable is the capacity C which includes the self-capacity of the coil. By giving C different values the results in Table I. were computed using (7).

The results are shown pictorially in Fig. 8 from which it is clear that the amplification decreases with increase in capacity provided R/L remains constant. At the lower wavelengths R will increase so that the actual curve will tend to follow the dotted line. In an H.F. neutrodyne amplifier, employing tuned anodes, the magnification would be expected to fall off with increase in wavelength and this actually occurs in practice.

TABLE I.

Showing valve magnification with tuned anode and complete valve capacity neutralisation at various wavelengths using a D.E.3.

λ metres.	C $\mu\mu$F.	Effective valve mag.	% valve mag.
300	100	6.56	0.94
367	150	6.41	0.91
424	200	6.23	0.89
475	250	6.09	0.87
520	300	5.95	0.85

The next point to which attention may be directed is the influence of the size of the condenser at some specified wavelength. Suppose we choose 367 metres, which is somewhere in the vicinity of 2LO, and assume the ratio R/L for the various coils is constant for various inductances, the magnification formula (5) is

$$\frac{m}{1 + \frac{CR\rho}{L}} = \frac{7}{1 + 6 \times 10^{-4} C}$$

since ρ and R/L are unaltered. Giving C the same values as before and altering the inductance to preserve a wavelength of

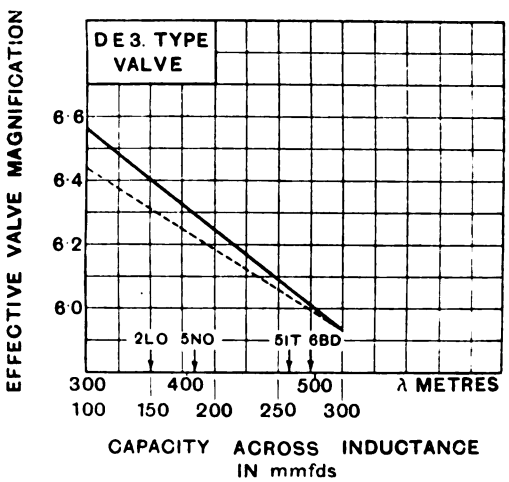

Fig. 8. *Showing decrease in magnification with increase in wavelength (due to increase in capacity of anode tuning condenser). Calculated for D.E.3 valve for which* m = 7 *and* $\rho = 22{,}000$ *ohms.*

Digitized by Google

367 metres we get a curve identical with that of Fig. 8. To avoid confusion this has been redrawn in Fig. 9 and extra points added to include larger capacities. It will be obvious that with a given valve when the wavelength is fixed and the ratio R/L constant, the magnification decreases with increase in the capacity across the coil. Thus for sensitivity a small condenser and a large inductance is required, especially if there are several valves in cascade. Taking a condenser of $700\mu\mu$F, *i.e.*, 0.0007μF, the percentage of the possible magnification is about 70. With three of these in cascade it would be $100 \times (0.7)^3 = 100 \times 0.34 = 34$ per cent. Hence the voltage to the grid of the power valve would be reduced to 1/3, and the intensity from a loud speaker to 1/9. Put in another way, if the signals in a pair of phones were inaudible they might become audible when increased nine times by using anode tuning condensers of smaller capacity.

We come now to the influence of the resistance of the coil or more generally to the effect of varying the ratio R/L. The curves

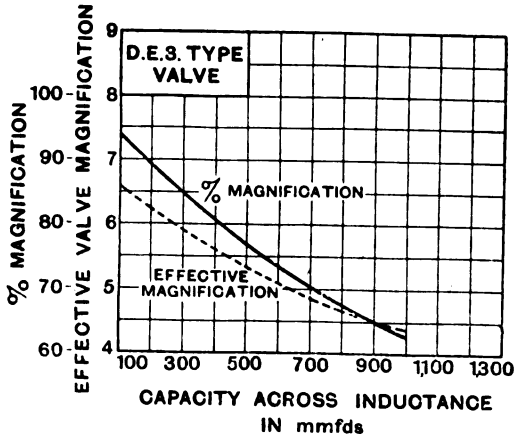

Fig. 9. *Showing decrease in magnification with increase in capacity at a given wavelength, the inductance being gradually reduced as the condenser is increased (D.E.3 valve).*

of Fig. 8 were based on a resistance of 7 ohms with an inductance of 250 microhenries. Now let us take a wavelength of 367 metres and vary the resistance of the coil whilst preserving a constant inductance. The percentage magnification is given by

$$100/\left(1+\frac{150\times 10^{-12}\times 22{,}000R}{250\times 10^{-6}}\right)$$
$$=100/(1+1.32\times 10^{-2}R)$$

The various values associated with the problem are given in Table II.

There is no need to plot these figures. They show clearly that to get as large a percentage of the "m" value out of the valve, the resistance should be as small as possible. So long, however, as the resistance is not too

TABLE II.

$\lambda = 367$ metres, $L = 250$ microhenries, $C = 150\mu\mu$F.

R ohms.	% magnification.	Effective valve magnification.
3	0.96	6.7
5	0.94	6.6
7	0.92	6.4
9	0.89	6.2
11	0.87	6.1
15	0.84	5.9
19	0.8	5.6

large the magnification does not fall off very much, except of course in a cascade system, where the resistance should be kept down.

Lastly there is the valve resistance ρ. This would be a very simple issue provided the "m" value were constant for different resistances. But as is well known, when "m" increases ρ usually increases too. There are, however, a number of valves of different classes in which the variation in "m" is relatively small compared with that of ρ. For instance, for a D.E.3, $m = 7$ and $\rho = 22{,}000$, whilst for a D.E.8 L.F. $m = 7$, whilst $\rho = 8{,}000$.* If in the preceding examples a D.E.8 had been used instead of a D.E.3 the lower resistance would have enabled the same magnification to be obtained with larger condensers and larger coil resistances. But as there is no particular point in using large condensers and resistances, and since the magnification is tolerably good already, there would not be much gained in using D.E.8 valves of 8,000 ohms internal resistance. In fact there would be a loss of 0.06 amp filament current per valve and an extra 2 volts needed.

Going to the other side of the question, suppose the D.E.3 is replaced by a D.E.3B, m is now 17 and $\rho = 50{,}000$. Taking our original coil at 367 metres, we find that the

* This ρ value is specified by the makers, but they are on the low side. The actual value is more nearly 14,000. (See *Wireless World*, 6th January, 1926.)

Digitized by Google

percentage magnification is 83 and the valve magnification 14. These compare very favourably with the corresponding values 91 per cent. and 6.4 for a D.E.3. In fact the magnification is doubled, provided of course the D.E.3B is not defective and an adequate H.T. is used. This raises the question of using D.E.3B valves. There is no reason why they should not be incorporated in an H.F. amplifier, but the H.T. will have to be greater than that for a D.E.3, and to avoid damping, it is advisable to put a little bias on the grid. The bias should be sufficient to avoid grid current when strong jamming is prevalent. With a high resistance valve the influence of a large condenser or a large coil resistance is quite marked. Using a D.E.3, a coil resistance of 15 ohms gives a percentage magnification of 84, whilst with a D.E.3B the value is 69 per cent., but the actual magnification is 12. Moreover for efficient amplification with a high resistance valve particular care must be exercised to keep C and R as small as practicable.

We have examined the influence of capacity, inductance, coil resistance and valve resistance on the amplification of a neutralised tuned anode circuit. It now remains to be seen what effect these variable components have upon the *selectivity* of the arrangement.

Selectivity of the Neutralised Tuned Anode.

To arrive at a solution of this problem we must invoke the aid of a little more mathematical analysis. The impedance of the tuned circuit *at any frequency* is given by equation (3) which reads

$$Z = \frac{R + j\omega L}{A + j\omega CR}.$$

When the denominator of this expression is rationalised to eliminate j, $(\sqrt{-1})$, we get as a first step

$$Z = \frac{R + j\omega L}{A + j\omega CR} \cdot \frac{(A - j\omega CR)}{(A - j\omega CR)}$$

$$= \frac{R + j\omega(AL - CR^2)}{A^2 + \omega^2 C^2 R^2}$$

$$= R_0 + j\omega P \quad .. \quad .. \quad .. \quad (8)$$

where

$$R_0 = \frac{R}{A^2 + \omega^2 C^2 R^2} \text{ and } P = \frac{AL - CR^2}{A^2 + \omega^2 C^2 R^2}$$

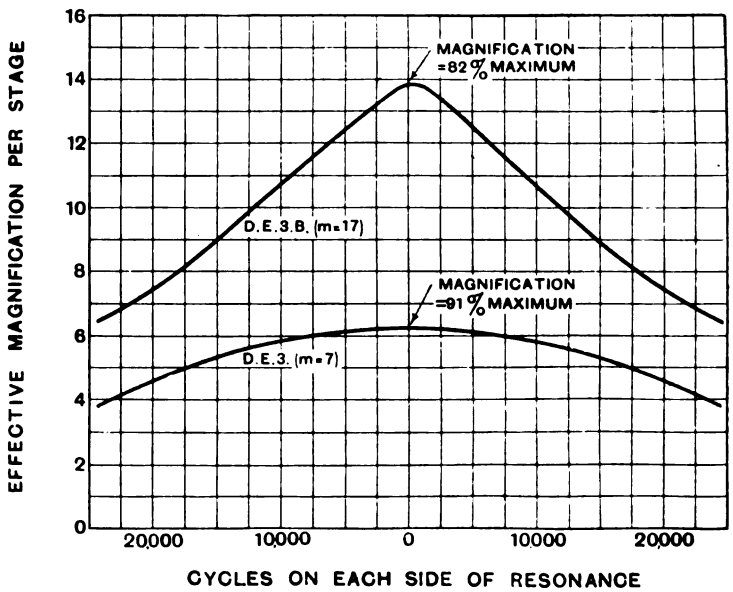

Fig. 10a. *Showing magnification curves for tuned anode with D.E.3 and D.E.3B valves.*

= an inductionless resistance R_0 + a reactance of value ωP.

For purposes of computation, the numerical value of Z is found from the expression $[R_0^2 + \omega^2 P^2]^{\frac{1}{2}} = Z_0$. To determine the selectivity curve showing the relation between effective valve magnification and frequency when the condenser is set on a given station, it is necessary to obtain the ratio

$$\frac{\text{impedance of tuned circuit}}{\text{imped. of valve} + \text{imped. of tuned circuit}}$$

for a band of frequencies $\pm$ 3 per cent. of the central setting of the condenser.

Digitized by Google

This ratio is equal to the expression

$$\frac{(R_0^2+\omega^2P^2)^{\frac{1}{2}}}{[(R_0+\rho)^2+\omega^2P^2]^{\frac{1}{2}}} \quad \cdots \quad (9)$$

The effective valve magnification m_e = m × expression (9).

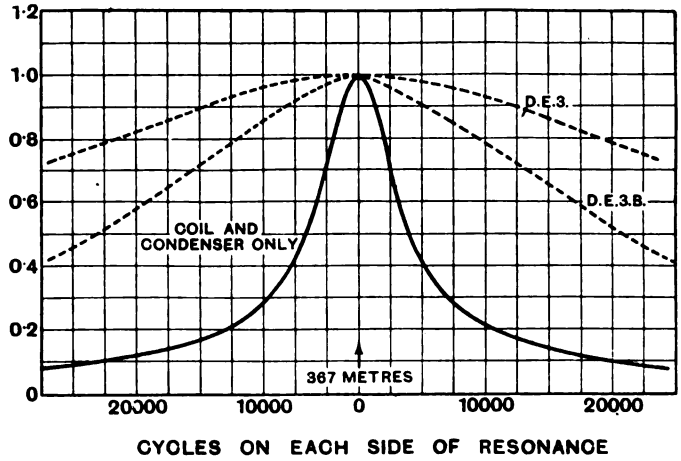

Fig. 10b. *Showing relative selectivity curves of tuned anode with and without valve damping.*

This can be written

$$m_e=\frac{[R^2+\omega^2K^2]^{\frac{1}{2}}}{[\{R+\rho(A^2+\omega^2C^2R^2)\}^2+\omega^2K^2]^{\frac{1}{2}}} \cdots (10)$$

where $K=AL-CR^2$, and $A=1-\omega^2LC$.

Taking our previous coil and using a D.E.3 valve with ρ = 22,000 ohms, we can at a wavelength of, say, 367 metres obtain from (10) the magnification for frequencies on both sides of this tune point, since all the quantities excepting ω are constant. The result of this calculation is illustrated in Fig. 10 (a) (b). Curves for a D.E.3B valve and for the coil and condenser devoid of valve damping have been added. Compared with the circuit alone, *i.e.*; devoid of valve damping, the other curves show an absence of selectivity and if the data under the curves is consulted the reason will be obvious. The resistances equivalent to the valve damping to be added to the coil resistance are so large, that the selectivity is reduced considerably, although the maximum magnification is altered but little. Take, for example, a frequency 15,000 cycles from the tune point, we find the selectivity of the circuit* alone is 4.6 that with the D.E.3B, and 6.1 times that with the D.E.3.

An inspection of the curves will reveal the fact that the D.E.3B valve gives greater selectivity and greater magnification than the D.E.3.

The explanation of this is as follows :—

(1) The selectivity is enhanced owing to the impedance of the tuned circuit when off the tune point being a smaller proportion of the total impedance (with a high impedance valve) ;

(2) The magnification is augmented due to the greater "m" value of the D.E.3B valve.

We have already seen that the magnification with any given valve falls away with increase in the capacity of the condenser whether the wavelength is constant or

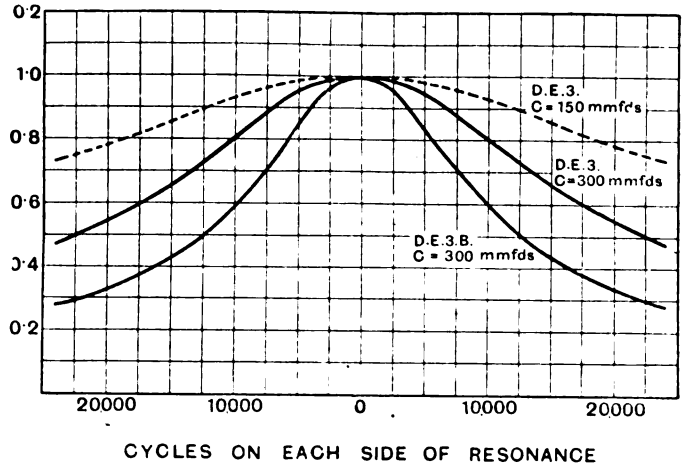

Fig. 11. *Curves showing gain in selectivity with a large condenser across tuning coil.*

* Ratio of ordinates—a purely arbitrary mode of measurement for purposes of illustration.

Digitized by Google

variable. Thus the magnification of a multi-stage tuned anode amplifier will be greater at 250 metres than at 500 metres, provided the conditions assumed herein are not violated.

The last topic which we have to consider is the influence of the condenser on the selectivity. Taking equation (10) and using a wavelength of 367 metres, as in the preceding example, the condenser will be fixed as 300$\mu\mu$F (0.0003μF) or about twice its former value. The values of L and R will be halved, and L/R remains constant. The resulting curves are plotted in Fig. 11, whilst the curve for a capacity of 150$\mu\mu$F is also given in order that the influence of the augmented capacity can be recognised at a glance.

Summary of Results for Neutralised Tuned Anode at any given Wavelength.

(1) The magnification per stage can never exceed the "m" value of the valve (excluding anode taps and ratio transformers greater than unity).

(2) The magnification increases with increase in inductance. There is a limit to L owing to the self-capacity of the coil. In this case the value of L/C_sR should be as small as possible, *i.e.*, the self-capacity should be kept down.

(3) The magnification decreases with increase in capacity.

(4) The magnification decreases with increase in valve resistance (ρ) provided "m" is constant.

(5) The magnification increases with "m" provided ρ is constant, so that (4) and (5) means a sort of compromise. In general, unless the set is badly designed, the magnification will increase with "m" provided ρ/m does not increase too much.

(6) The effect of the preceding factors on "selectivity" is exactly the opposite of that on magnification, *i.e.*, a large condenser or a large ρ gives selectivity. Thus with adequate H.T. a D.E.3B is a better valve than a D.E.3, because it gives more magnification and better selectivity, provided, of course, trouble is not experienced due to stray capacities and coil interaction introduced by the larger A.C. in the coils in virtue of the increased step up per stage. For a given magnification the number of stages would be less for D.E.3B's than for D.E.3's, but care would have to be exercised regarding the stability. Assuming an average of five per stage with a D.E.3 and 10 with a D.E.3B, four stages of D.E.3 yield 625, whilst three stages of D.E.3B yield 1,000 and perhaps a little oscillation!

(7) The magnification increases with decrease in coil resistance, but unless the resistance is really large, *i.e.*, L/R is poor, its effect is not very marked. So far as selectivity is concerned the coil resistance is often swamped by valve damping so that it does not play a very important factor with a low ρ value.

(8) Where a band of wavelengths, say 250 to 550 metres, are covered by a fixed coil and a variable condenser, the magnification decreases at the longer wavelengths, but the selectivity increases, *i.e.*, one is secured at the expense of the other.

It may be advisable to mention that throughout the article we have tacitly assumed the valves to be operated with grid bias and that the excursions of grid potential are small, the H.T. voltage being adequate for operation on a linear part of the characteristic thus avoiding rectification. The "m" and ρ values actually depend upon the H.T. volts, the grid bias and the class of valve used. It should be noted that practical results may not always tally with the calculations given here owing to variations in "m" and ρ. There is in general a tendency for ρ values to be high, especially with small H.T., so that one has to be on the look out for reduced magnification. For example, an average of 4 per stage is nearer the mark for a D.E.3 than 5 quoted above. Personally I always endeavour to cut the filament current down to a minimum. One can obtain a good deal greater magnification with four dull emitters of the D.E.3 class than with one of the D.E.5 class—even though it is a D.E.5B—with a smaller watt loss on the filaments. For those to whom filament current is a minor consideration this argument is obviously inapplicable.

Digitized by Google

A Direct Current Test Set.

By T. S. Skeet. **[R384**

THE writer realised at an early date, along, no doubt, with many other experimenters, that serious electrical experimental work of any description is impossible without suitable measuring instruments. This article describes a test set arranged to cover the many requirements of

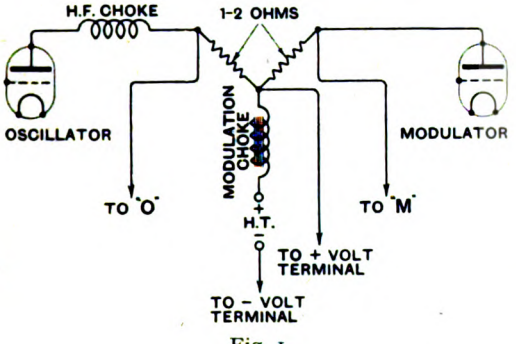

Fig. 1.

the experimenter, whose hobby is either transmission or reception. By means of the switch which can be seen in the photographs, the meter is arranged to give full scale readings of 1,000V, 100V, 10V, 5V, 0.5V, and 0.1V. The use of the terminals on the top of the instrument, combined with the use of the switch, enables full scale current readings of 10A, 5A, 2½A, 500 mA, and 50 mA to be obtained. At the switch setting of 0.1V the resistance of the instrument is only 20 ohms, and this scale can be used for 5 mA full scale reading.

The set was designed to form one unit of a transmitting set, which has not yet materialised, and the two terminals, marked *O* and *M*, with their corresponding switch studs, were intended for reading by means of external shunts, the current fed to the oscillator and modulator valves respectively, of a choke coupled 10-watt transmitter. The 1,000V scale, whose switch stud is adjacent to the (*M*) stud, being intended to read the voltage of the supply.

The arrangement of the connections to the transmitter to enable this to be done without additional switching is shown in Fig. 1.

It will be seen that when the supply voltage is being measured the modulation choke is in series with the meter, but as the resistance of the meter at the 1,000V setting is 200,000 ohms and the choke approximately 4,000 ohms the error introduced into the reading is not more than 2 per cent.

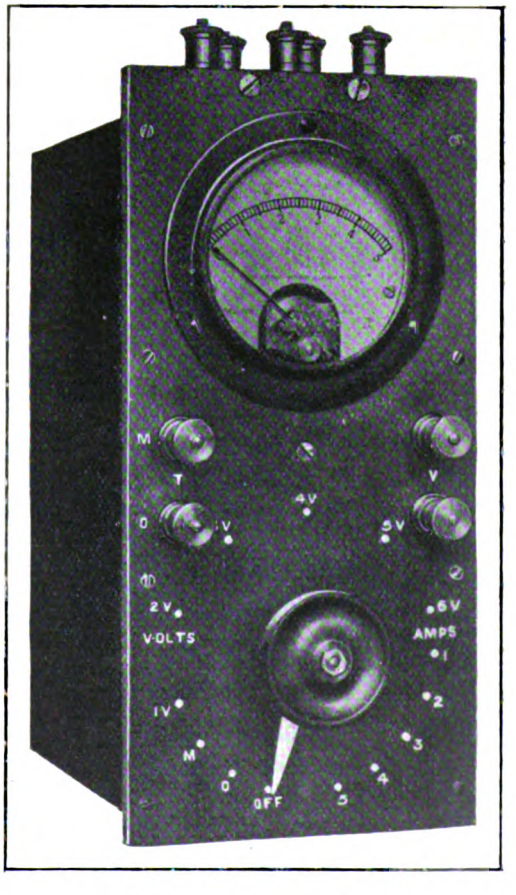

Front view of set, showing meter.

Digitized by Google

As the set was not required for immediate use in the transmitter, the general utility has been increased by the addition, inside the case, of a 4.5V pocket lamp battery.

This battery is connected between the negative volt terminal and the terminal marked *M*, the original wire being taken off.

The positive volt terminal and the one marked *M* can now be used with the switch set to 5V for tracing wiring and general testing purposes.

The constructional details are as follows :—

The meter is a Western model 301 milliammeter with full scale reading 5 mA, and its resistance is approximately 11 ohms. This small full-scale current is a great advantage, when the instrument is used for measuring the supply on a low power transmitter ; owing to the fact that the current may be fed through high resistance rectifiers and smoothing filters. If a meter is used which takes, say, 15 mA, the meter load is comparable to the transmitter load, and the voltage indicated by the meter will be very

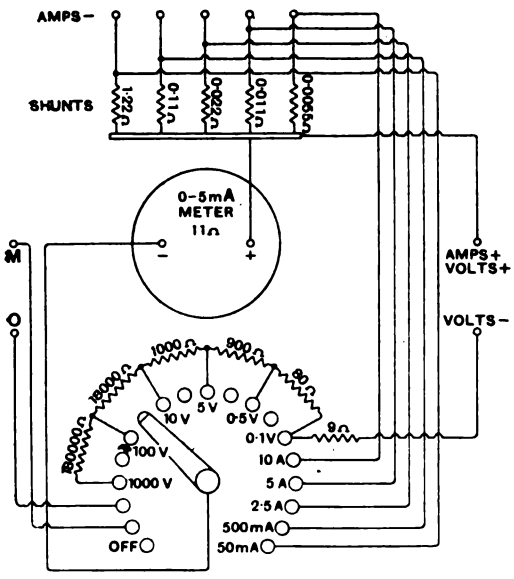

Fig. 2.

The internal connections of the test set.

much lower than that normally supplied to the valves with the meter out of circuit.

Cheaper meters may be obtained, but the writer recommends the type mentioned above.

The resistances required in the voltmeter circuit are as shown in Fig 2. The high resistances were wound with 47 gauge Eureka

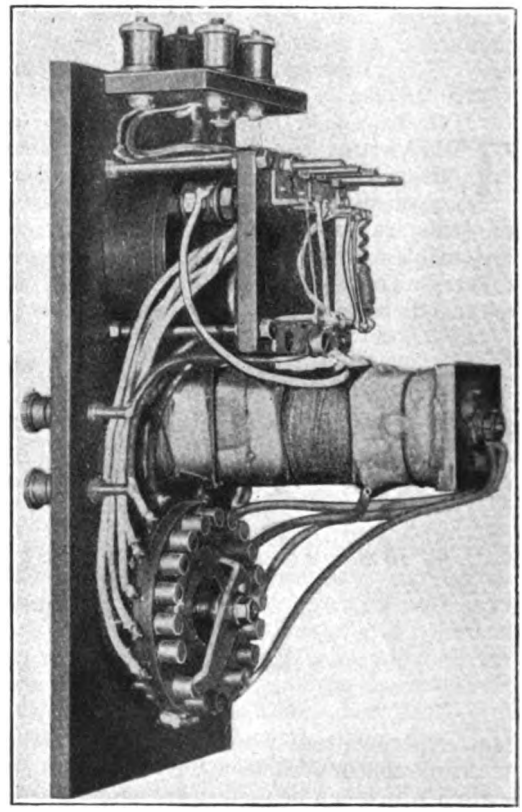

Side view showing resistance bobbin.

double-covered silk wire, one ounce of which cost 7s. 6d., and sufficed for all the coils. The resistance of the ounce of wire was approximately 280,000 ohms.

The projecting object perpendicular to the face of the instrument, which can be seen in the photographs, is the former on which the higher resistances are wound.

Owing to the fact that the winding must stand a potential difference between its ends of 1,000V, and that 47 gauge Eureka gets warm with 5 mA flowing continuously, a straight winding on a bobbin was not considered safe.

The former was made to the shape of a four-cornered cage. Stiff wire was threaded through holes in the ends and division pieces and through pieces of large sized Sistoflex,

Digitized by Google

the end pieces being held at the correct distance apart by means of nuts on a 2 B.A. threaded rod through the centre.

After the winding was completed the coil was immersed in molten paraffin to preserve the insulation. The four resistances of lower value are wound with somewhat larger wire, on a spool carried on the underside of the shunt panel. The shunts, which are carried on an auxiliary panel mounted on screwed legs behind the meter, have resistances of approximately the values given in Fig 1. It is not suggested, however, that the shunts be made by calculation and measurement; in the case of the instrument in question, the shunts were made of various sizes of high resistance wire, and were adjusted by scraping in the larger sizes, and by trial and error in the small sizes, whilst the instrument was carrying current in series with a standard meter. The check readings should be taken when the shunt lugs are cold, as the heat due to the soldering will cause quite a large deflection on such an instrument, due to the thermo-electric E.M.F. which is set up.

The switch may be made from the type of parts sold for wireless purposes, but something more workmanlike was preferred, and the under panel switch was constructed with properly faced contacts and a rotary lever ground into position on contacts and centre disc. The lever is insulated from the shaft by means of ebonite bushes.

It will be noticed from the diagram that there is a dead stud between each pair of live volt-studs, which is used to prevent accidental contact with a lower resistance than it is intended to use. This precaution is not necessary in the case of the current studs, as only one stud will be "alive" at any one time.

Particular attention should be paid to the soldering of the shunt, as a breakage of a shunt connection whilst the meter is in use for measuring current would result in a burnt-out moving coil, the cost of repair to which, as the writer knows to his regret, is almost 50 per cent. of the original cost of the instrument.

The 0.5V and 0.1V scales are used for measuring voltage drops in leads, switch contacts, etc., and for measuring thermo-electric E.M.Fs. Whilst general tests which may be made with such an instrument are too obvious to need description, a use for which the meter has proved invaluable might with advantage be described, viz., the testing of an amplifier valve, whether power type or otherwise, for correct grid bias.

The 5 mA or 50 mA circuit of the meter is included in the anode circuit of the valve to be tested, and the indications noted when strong telephony is being received. If the needle gives decided kicks to the right (increase of current) the negative grid potential is too great, whilst if the needle kicks to the left the reverse is the case.

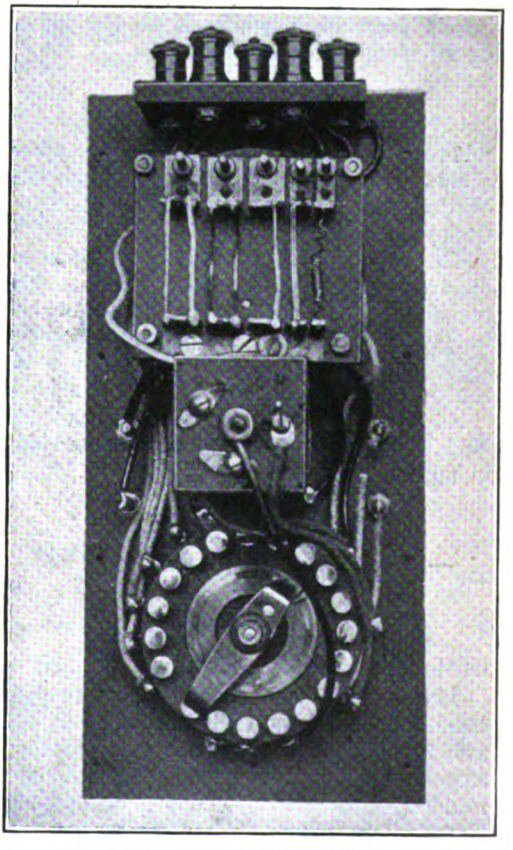

Back view, showing shunts.

In conclusion, the writer would like to add that, although good results are sometimes obtained by the trial and error method, such a method is painfully slow, and if knowledge is to be gained as a result of the experiments, systematic measurement is essential.

Digitized by Google

Common Errors in Condenser Calculations.

Making Condensers to Accurate Values.

By E. H. W. Banner, M.Sc., A.Inst.P. **[R127.2**

FOR the manufacture of small condensers for radio sets formulæ are usually given without any qualification, with the result that a condenser apparently exactly similar to the calculated dimensions when tested is far from its expected value. The formula given in most elementary text-books and radio periodicals for the capacity of an elementary condenser is

$$C = \frac{A}{4\pi d}$$

where A is the area of one of the two opposing plates and d is the distance between them. Without a statement of the units this is useless.

The capacity C, calculated as above, is in electrostatic units, or centimetres. The reason why the unit is the centimetre will be given later. For practical purposes the capacity is required in farads (or a sub-multiple, microfarads).

As there are 9×10^{11} electrostatic units (E.S.U.) of capacity in one farad the capacity in farads becomes

$$\frac{A}{4\pi d \times 9 \times 10^{11}}$$

and in microfarads

$$\frac{A}{4\pi d \times 9 \times 10^{5}}$$

as there are 10^6 microfarads in a farad.

The formula now applies to a two-plate condenser with air dielectric. When there are more than two plates, the factor N appears in the numerator, where N is the number of dielectrics, which is one less than the total number of plates or electrodes in the condenser. When the dielectric used is not air the capacity is increased by the dielectric constant of the material used. The dielectric constant of a substance is denoted by ϵ (in old books by K or *S.I.C.*).

The formula is now

$$\frac{NA\epsilon}{4\pi d \times 9 \times 10^{5}}\ \mu\text{F} = \frac{.0884}{10^6}\ \frac{NA\epsilon}{d}\ \mu\text{F}$$

when A is the area of each plate in square centimetres, and d the thickness of the dielectric in centimetres. The formula as given, however, is approximate only, the approximation depending on the ratio of the dimensions of the plates to their distance apart, which is the thickness of the dielectric.

The reason for this approximation is quite obvious from a study of a diagram showing the lines of electric stress between the plates of a condenser (see Fig. 1). At the centre of the plates the lines of force are straight, and take the shortest path across the gap. Towards the ends the lines bulge outwards, and outside the limits of the plates curves are obtained which extend right around to the backs of the plates. It is this bulging that causes the formula to be incorrect.

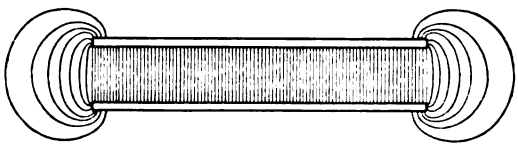

Fig. 1. *Showing the distribution of the lines of force between the charged plates of a condenser.*

Within the limits of the straight-line area of the plates the formula holds good, but as the edge-effects, as they are termed, are manifest in any size of condenser, it follows that to reduce the edge effects the area should be large or the distance apart small. This is better expressed by saying that the ratio of area (or dimensions) of the plates to the distance apart should be as great as possible. If the area is several square centimetres and the dielectric only a few thousands of an inch thick, the approximation is sufficiently near to be used.

When the ratio is not large, and a nearer value is required the formula below, which takes into account the fringing at the ends, should be used.

Consider two opposing surfaces as in Fig. 2, and neglect for the present the further

Digitized by Google

edges, and the edges in a plane perpendicular to that of the paper. Fringing or spreading of the lines takes place at the edges and as a close approximation the length a may be considered to be increased by an amount $d/2\pi$ with no fringing or edge effect.

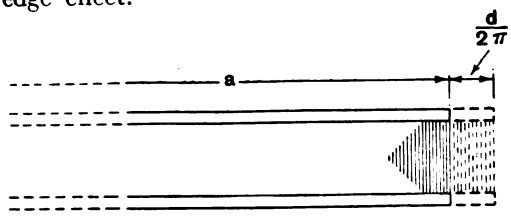

Fig. 2. *Showing how the edge effect may be allowed for in calculations by assuming an increase $d/2\pi$ in the length of the condenser plate.*

d, as before, is the distance between the plates in the same units as the length a, and in the numerical formulæ given, in centimetres.

For this approximation to hold, d must be less than the dimensions of the plates, which is nearly always the case in practice.

It is also incorrect if the thickness of the plate, measured in the direction of d, is great, but in condensers the plates are always thin, and so the approximation is sufficiently close to be of use.

Applying this correction to a practical case, circular plates will first be considered, the two plates being presupposed coaxial, parallel and of equal area.

The imaginary strip of plate $d/2\pi$ to account for the fringing obviously extends all round the edges and so the effective radius of one plate is

$$r + \frac{d}{2\pi}$$

where r is the measured radius.

The effective area is $\left(r + \frac{d}{2\pi}\right)^2$

For a pair of rectangular plates the strip of width $d/2\pi$ has to be added at each edge as before, and so if the physical dimensions are a, b, the effective dimensions are

$$a + \frac{d}{\pi} \text{ and } b + \frac{d}{\pi}$$

as the fringing is manifest at both extremities of the plates, in each plane, as in Fig. 3.

The area being two-dimensioned, the strip d has to be added to the dimension b, in the plane of a.

Fig. 3 shows the rectangular plate a b with the imaginary strips added, and it will be seen that the strips do not account for the whole area, as the corners have no addition for fringing.

This correction is small, but it may be allowed for by adding to the effective area as already defined the area of a circle radius $d/2\pi$, as the four corners require quadrants of a circle to complete them.

The complete expression for the effective area of a rectangular plate system is thus expressed as

$$\left(a + \frac{d}{\pi}\right)\left(b + \frac{d}{\pi}\right) + \pi\left(\frac{d}{2\pi}\right)^2$$

Neglecting edge effects, the capacity between two opposing electrodes is independent of their shape, for a given area, and other conditions being constant. When the edge effect is considered it will be seen that the capacity is not independent of the components of the area, as the length of the additional strip of width $d/2\pi$ depends on the circumference of the electrodes and not on their area.

For example, consider a system of two equal rectangular plates of sides 4 cm. × 2 cm. and suppose that $d/2\pi = \frac{1}{2}$, for simplicity, although the ratio is large for a practical case.

The actual area is 8 cm.² but the effective area is

$$(4+1)(2+1) + \pi(\tfrac{1}{2})^2 = 15.78 \text{ cm.}^2$$

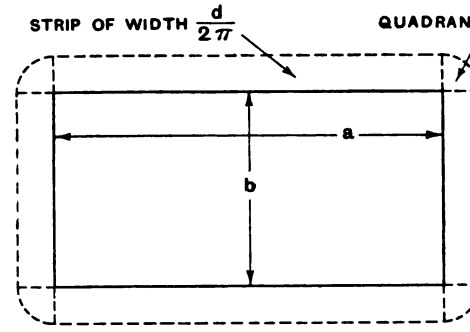

Fig. 3. *Showing the effective size of a rectangular condenser plate.*

For circular plates of area = 8 cm.², the radius is (nearly) 1.6 cm. The effective area is

$$\pi\left(r + \frac{d^2}{2\pi}\right) = 13.9 \text{cm.}^2, \text{ which is about}$$

Digitized by Google

12 per cent. less than that of the rectangular plates.

In practice $d/2\pi$ will be considerably less than .5, except for the case of small condensers for high voltages, when the dimension d is determined by the voltage to be used.

It is to condensers of this nature that the corrections for edge effects are most necessary.

In the formulæ given at the commencement of the paper the effective area, as determined from the foregoing, should be used as A.

When the exact result is required, the following formula by Kirchhoff must be used. This applies to circular plates; for rectangular plates the formula is much more complicated.

$$C=\frac{\pi r^2}{4\pi d}+\frac{r}{4\pi d}\times\left\{d\log_\epsilon\frac{16\pi r(d+t)}{ed^2}+t\log_\epsilon\frac{d+t}{t}\right\}+c'$$

where C' is any part of the capacity which does not change with d.

r is the radius of the discs.
d ,, distance between plates } cm.
t ,, thickness of plates.
ϵ ,, base of the Naperian logarithms.

This is in E.S.U. and for air dielectrics.

The two difficulties in making a condenser to a given specification are in measuring the true thickness of the dielectric and in knowing the actual dielectric constant of the material used. For any condensers other than those with an air dielectric these two difficulties are far greater than is generally realised. If the dielectric is measured with a micrometer to be one thousandth of an inch, an error in the spacing of one thousandth of an inch, which is quite small and easily obtained, means that the actual capacity is altered by a factor of two. If mica is used, it may be found that the mean thickness is one thousandth, to considerable accuracy, if a good micrometer is used, but the source of error is then in the air film which is usually present. A film of air of one thousandth of an inch would make an appreciable difference to the resultant capacity, and is difficult to eliminate. In general, it can be minimised by having thick dielectrics, great pressure as soon as assembled, or impregnation with varnish and drying under pressure.

The other source of error is in the dielectric constant of the material. If the figure is looked up in different books very different values will result. For example, mica is given as about 2.5 in some books and 7 in others. Here is a source of error having a maximum of 7/2.5, which upsets any calculation. Possibly the best way of overcoming this difficulty is to make up a condenser of dimensions known to a good degree of accuracy, especially as to thickness of the mica. Then the condenser can be tested by a standardising laboratory, and from the formula the value of ϵ can be worked out. This value can then be inserted in the calculations for the required condenser. This assumes that the two samples of mica will have the same values, which is likely if they are split from the same slab.

As a rule, the capacity of a small condenser made up to calculations cannot be relied on to more than about $\pm$ 25 per cent. accuracy. That is, if the condenser is nominally .01μF (microfarad) it may be anything from .0075 to .0125μF, unless great precautions were taken in measuring the dielectric accurately and in the total exclusion of air, also in knowing the correct value of the dielectric constant.

The capacity of a sphere in free space, of radius r cm., charged with Q units of electricity has a potential at any point d from the centre of the sphere of $v=Q/d$ (E.S.U.). The potential of the sphere is Qr and from this $r=Qv$. Now, by definition $C=Q/v$, therefore $C=r$ or the capacity in E.S.U. is numerically equal to the radius of the sphere. A sphere of radius 1 cm. therefore has a capacity, in free space, of 1 cm. or 1 electrostatic unit. This explains why the unit of capacity is the cm.

Digitized by Google

Mathematics for Wireless Amateurs.

By F. M. Colebrook, B.Sc., A.C.G.I., D.I.C. **[510**

(*Continued from page 498 of August issue.*)

(4) Indices. (A) Definition of an Index.

THE first four instalments of this series have been devoted to a very thorough discussion of the four fundamental operations of Algebra. The present section will deal with a very important set of ideas derived directly from the ideas of multiplication and division.

Consider the product

$$a \times b \times c \times d \ . \ . \ . \ n \text{ factors in all,}$$

where n is of necessity a positive integer, and the other letters have the full significance of algebraic letter symbols. Now suppose that the factors are all equal to each other. Then the product takes the form

$$a \times a \times a \times a \ . \ . \ . \ n \text{ factors.}$$

Now just as the sum of n a's was abbreviated into $a \times n$, so the product of n a's similarly lends itself to abbreviation, and the accepted form of abbreviation is

$$a \times a \times a \times a \ . \ . \ . \ n \text{ factors} = (i.e. \text{ is written})\ a^n.$$

The double symbol on the right is spoken of as "a to the nth" or "the nth power of a." It follows from this definition that n must be a positive integer.

(B) The Index Law.

From the definition of an index,

$$\begin{aligned} a^m \times a^n &= (a \times a \times a \times a \ . \ . \ . \ m \text{ factors}) \\ &\quad \times (a \times a \times a \times a \ . \ . \ . \ n \text{ factors}) \\ &= (a \times a \times a \times a \times a \times a \ . \ . \ . \ m+n \\ &\quad \text{factors}) \\ &= a^{(m+n)} \end{aligned}$$

i.e., $$a^m \times a^n = a^{(m+n)}$$

The general result symbolised in this formula will be referred to hereafter as the Index Law.

(B1) The Negative "Index."

The word "index" is put in inverted commas to emphasise the fact that this is only "a manner o' speaking." An index is a positive integer, but it is very convenient to allow a negative number to masquerade as an index for the following reason.

Consider the fraction a^m/a^n. If $m > n$, a^m can be written $a^m = a^{m-n+n} = a^{m-n} \times a^n$ by the Index Law, so that

$$a^m/a^n = (a^{m-n} \times a^n)/a^n = a^{m-n}$$

(see para. (E2) of Section 3). On the other hand, if $m < n$ it can obviously be shown in exactly the same manner that

$$a^m/a^n = 1/a^{n-m}.$$

Now this double result, depending on whether $m > n$ or $m < n$ involves a deal of tiresome conversation and would be a great nuisance in practice. The nuisance can be avoided in this way. Let us write $1/a^n$ in the form a^{-n}. The symbol a^{-n} is in itself quite meaningless, so we are quite at liberty to attach the above meaning to it if we so desire, and if any useful purpose will be served by doing so. Notice carefully, however, that the $-n$ in a^{-n} is not strictly speaking an index, and a^{-n} is nothing more than *a way of writing* $1/a^n$. On this understanding,

$$a^m/a^n = a^m \times a^{-n}$$

Now if $m > n$, $a^m/a^n = a^{m-n}$ as shown above

i.e. $$\begin{aligned} a^m \times a^{-n} &= a^{m-n} \\ &= a^{m+(-n)} \end{aligned}$$

which shows that the $-n$ can be treated as if it were a genuine index, obeying the Index Law. Moreover, both cases are now included in the one formula, for if $m < n$, then, as shown above

$$a^m/a^n = 1/a^{n-m}$$

and $1/a^{n-m}$, in virtue of the meaning that we have attached to a negative number written as an index, can be put in the form

$$\begin{aligned} 1/a^{n-m} &= 1/a^{-(m-n)} \\ &= a^{m-n} \end{aligned}$$

Thus the meaning that we have arbitrarily assigned to a negative number written as an index has the advantage that such negative numbers can be treated as if they were genuine indices obeying the Index Law, and an index can if necessary be allowed to assume a negative value without causing us to re-write the resulting expressions in some other form.

Digitized by Google

(B2) **The Zero "Index."**

Again, there is strictly speaking no such thing as the zero index. However, consider a^m/a^n when n becomes equal to m. In accordance with the ideas explained in the preceding paragraph

$$a^m/a^m = a^{(m-m)} = a^0$$

and since a^m/a^m is unity, it follows that a^0 is unity for all finite values of a. (Notice that if $a=0$, a^0 becomes the germ of insanity described in para. (E4) of Section 3, so don't let $a=0$ in a^0). Thus a^0, an idea which is incomprehensible in itself, is really nothing more than a convenient way of writing a^m/a^m,* and its value is unity for all finite values of a except $a=0$.

(B3) **Repeated Products of Powers.**

Since $a^m \times a^n = a^{m+n}$ for positive or negative values of m or n, it follows from the Law of Association that

$$a^m \times a^n \times a^p \times a^q \ldots r \text{ factors} = a^{m+n+p+q+\ldots r \text{ terms}}$$

and if $m=n=p=\text{etc.}$

this becomes

$$a^m \times a^m \times a^m \times a^m \ldots r \text{ factors} = a^{m+m+m+\ldots r \text{ terms}}$$

i.e. $$(a^m)^r = a^{m \times r} = a^{mr}$$

As an exercise the reader is recommended to show from first principles that this is true for negative values of m and r, *e.g.*, $-p$ and $-q$, where p and q are positive. This amounts to showing that

$$1/(1/a^p)^q = a^{pq} \quad \left(i.e., \frac{1}{\left(\frac{1}{a^p}\right)^q} = a^{pq}\right)$$

(B4) **Powers of Products and Quotients.**

By writing out in full it will be found quite easy to show that for positive or negative values of n

$$(a \times b)^n = a^n \times b^n$$

and $$(a/b)^n = a^n/b^n$$

As a particular case of the latter, when $a=1$

$$(1/b)^n = 1^n/b^n = 1/b^n.$$

By writing $1/b$ as b^{-1} this is seen to be a special case of the result proved in para. (B3). Notice further that

$$(1/b)^{-n} = b^n.$$

(C) **Roots.**

Consider the statement

$$a \times a \times a \times a \ldots n \text{ factors} = a^n = b.$$

Here the number b is described as being made up of n factors each equal to a. Similarly a could be described in terms of b and n as that number, n factors each equal to which would give the number b. There is in fact a recognised way of writing this, *i.e.*

$$a = \sqrt[n]{b}$$

a is described as the nth root of b. Thus since

$$2 \times 2 \times 2 \times 2 = 2^4 = 16, \quad 2 = \sqrt[4]{16}$$

and 2 is described as the fourth root of 16. The definition of the nth root of b is clearly

$$(\sqrt[n]{b})^n = b.$$

There is no special magic about this way of writing the nth root of b, and if we wished to emphasise the analogy with the index form it could equally well be written

$$b^{n'}$$

the dash serving to distinguish it from b^n. Using this way of writing, the definition of $a^{n'}$ would be

$$(a^{n'})^n = a$$

Comparison of this definition with the result obtained above, *i.e.*

$$(a^n)^m = a^{mn}$$

suggests an even better way of writing the nth root of a. Suppose we write it as $a^{\frac{1}{n}}$. Then the definition of $a^{\frac{1}{n}}$ is

$$(a^{\frac{1}{n}})^n = a$$

which is in agreement with the formula $(a^m)^n = a^{mn}$, for it can be put

$$(a^{\frac{1}{n}})^n = a^{\frac{1}{n} \times n} = a' = a.$$

Notice carefully that $a^{\frac{1}{n}}$ is only *a convenient way of writing* $\sqrt[n]{a}$. The $1/n$ is not really

* Some more advanced students will possibly object that a^0 must be something more than the convenient mathematical fiction that it is here stated to be, since it is a form which frequently occurs in practical physics. For instance, take some quantity which changes with time according to the formula $x = x_0\, a^{bt}$ where x_0, a, and b are constant numbers. When $t=0$ the value of x is $x_0\, a^{b0}$, *i.e.*, x_0. It must be remembered, however, that t really represents an *interval* of time and should ideally be written in the form $t_2 - t_1$. The condition $t=0$ is thus really the condition $t_2 = t_1$, which is in agreement with the above discussion of a^0,

Digitized by Google

an index and the application of the above formula in the manner shown does not follow from the Index Law but from the definition of $a^{\frac{1}{n}}$.

It will be convenient to carry this notation one stage further, for, as the definition of the qth root of a^p we have

$$(\sqrt[q]{a^p})^q = a^p$$

and if $(\sqrt[q]{a^p})$ is written in the form $a^{\frac{p}{q}}$ this becomes

$$(a^{\frac{p}{q}})^q = a^p$$

which again is in agreement with the formula

$$(a^n)^m = a^{nm}$$

This suggests that $a^{\frac{p}{q}}$ will prove to be a convenient way of writing the qth root of a^p, so that we have as the definition of $a^{\frac{p}{q}}$ the statement

$$(a^{\frac{p}{q}})^q = a^p$$

We must now see to what extent the p/q in $a^{\frac{p}{q}}$ can be treated as if it really were an index.

(C1) **Product of Roots.**

Since $$(a^{\frac{p}{q}})^q = a^p$$

$$\{(a^{\frac{p}{q}})^q\}^s = a^{ps}$$

i.e., $$(a^{\frac{p}{q}})^{qs} = a^{ps} \quad \text{by para. (B3).}$$

Similarly $$(a^{\frac{r}{s}})^{qs} = a^{rq}$$

Therefore $$(a^{\frac{p}{q}})^{qs} \times (a^{\frac{r}{s}})^{qs} = a^{ps} \times a^{rq}$$

i.e., $$(a^{\frac{p}{q}} \times a^{\frac{r}{s}})^{qs} = a^{(ps+rq)}$$

This shows that $(a^{\frac{p}{q}} \times a^{\frac{r}{s}})$ is the qsth root of $a^{(ps+rq)}$, which we have agreed to write in the form $a^{\frac{ps+rq}{qs}}$, so that

$$(a^{\frac{p}{q}} \times a^{\frac{r}{s}}) = a^{\frac{ps+rq}{qs}} = a^{\left(\frac{p}{q}+\frac{r}{s}\right)}$$

The suggested form of notation therefore has the great advantage that the formula

$$a^m \times a^n = a^{m+n}$$

can be applied when m and n are fractions. A simple extension of the above proof will show that it will still apply even when m and n are negative fractions or when either is negative.

(C2) **Full Generalisation of the Index Formulæ.**

Assuming only that $a^{\frac{p}{q}}$ is a convenient way of writing the qth root of a^p, *i.e.*, on the basis of the definition

$$(a^{\frac{p}{q}})^q = a^p$$

it will be quite easy to show that the formulæ given in paras. (B), (B1), (B3) and (B4) can all be applied when the indices are fractional in form. For instance, to prove that

$$(a^m)^n = a^{mn}$$

where $m = p/q$ and $n = r/s$, p, q, r, and s being integers, we have, by definition

$$\{(a^{\frac{p}{q}})^{\frac{r}{s}}\}^s = (a^{\frac{p}{q}})^r$$

and $$\{(a^{\frac{p}{q}})^{\frac{r}{s}}\}^{qs} = \{(a^{\frac{p}{q}})^r\}^q$$

$$= \{(a^{\frac{p}{q}})^q\}^r$$

$$= (a^p)^r$$

$$= a^{pr}$$

so that by definition

$$\{(a^{\frac{p}{q}})^{\frac{r}{s}}\} = a^{\frac{pr}{qs}}$$

The proofs for the remaining formulæ will be omitted to save space. They will follow exactly similar lines to that given as an example. To resume, it may now be stated that for positive or negative integral or fractional values of m and n

$$a^m \times a^n = a^{(m+n)}$$

$$(a^m)^n = a^{mn}$$

$$(ab)^n = a^n b^n$$

$$(a/b)^n = a^n/b^n.$$

The reader should notice very carefully the logical sequence of the above demonstration of the generalisation of the index formulæ. This demonstration is put forward with all due deference as an alternative to the usual text-book treatment, in order to show that the full generalisation required can be

Digitized by Google

obtained without bringing in any incomprehensible ideas or any purely formal symbolism.*

(D) **An Example of the Index Notation.**

The products considered in para. (D2) of Section 3 can now be written

$$(x-a)\ (x-b) = x^2 - (a+b)\ x + ab$$

and $(x-a)\ (x-a) = (x-a)^2 = x^2 - 2ax + a^2$

Further, $(x-a)\ (x+a) = x^2 - a^2$

These three formulæ, which are three special cases of the multiplication of number groups, will prove to be of great use in practical mathematics.

(E) **Is $a^{\frac{1}{n}}$ always a Number?**

The definition of $a^{\frac{1}{n}}$ is

$$(a^{\frac{1}{n}})^n = a.$$

We have so far taken it for granted that if a and n are numbers, there is some other number, written $a^{\frac{1}{n}}$, which fulfils the above definition; and so there is in most cases, but not in every case. Suppose a is 64 and n is 3. Then, by definition,

$$(64^{\frac{1}{3}})^3 = 64$$

and since $4^3 = 64$

we may say that $64^{\frac{1}{3}} = 4$

Again, since $5^3 = 125$, $125^{\frac{1}{3}}$ is the number 5. Moreover, since 100 lies between 64 and 125, 100 will presumably be some number greater than 4 and less than 5, what Barrie would call "four and a bittock," *i.e.*, four and a fraction. Actually there is no number between four and five the cube of which is *exactly* equal to 100, and 100 is for this reason called an "irrational" quantity. (This, by the way, does not mean "unreasonable" or in any other way feminine. It simply means a number which cannot be exactly expressed as the ratio of two whole numbers.) However, by methods to be described later, a number can be found which satisfies the condition to a very high degree of accuracy.

Thus $(4.6)^3 = 97.34$

$(4.64)^3 = 99.9$

$(4.642)^3 = 100.03$

and so on. Since in real life there is always a limit to the accuracy with which measurements of quantity can be carried out, the distinction between an irrational quantity and a rational quantity is, as far as the physicist or experimenter is concerned, purely academic. Thus for any work of an accuracy of a tenth of 1 per cent., $100^{\frac{1}{3}}$ *is* 4.64.

Consider now another case. What is $25^{\frac{1}{2}}$? By definition,

$(25^{\frac{1}{2}})^2 = 25$

Now $(+5)^2 = 25$

and also $(-5)^2 = 25$ (see para (D1) of Sec. 3)

so that $25^{\frac{1}{2}} = +5$

and $25^{\frac{1}{2}} = -5$

In other words, $25^{\frac{1}{2}}$ not only exists—it leads a double life—a sort of Dr. Jekyll and Mr. Hyde. This duality can be expressed

$$25^{\frac{1}{2}} = \pm 5 \text{ (plus or minus 5)}$$

Notice further that any even root can be expressed as a square root, for

$$a^{\frac{1}{2p}} = \left(a^{\frac{1}{p}}\right)^{\frac{1}{2}} \text{ (see para. (B3) above)}$$

so that the $2p$th root of a is the square root of the pth root of a. It is clear, therefore, that any even root, if it exists at all, will have at least two real values, differing only in sign. In practice this implicit ambiguity would be an inconvenience, since mathematics is, or should be, plain dealing *par excellence*, so it is generally agreed that $a^{\frac{1}{2}}$ shall mean the real positive number which satisfies the definition. The ambiguity can now be made explicit.

For instance, if $x^2 = b$

then $x = \pm b^{\frac{1}{2}}$ or $\pm\sqrt{b}$

Notice that this ambiguity will not occur in the case of odd roots.

Thus $-3 \times -3 \times -3 = -27$

and $3 \times 3 \times 3 = 27$

so that $(27)^{\frac{1}{3}} = 3$

* It is seriously stated in some text-books that the generalisation of the index formulæ depends on the Principle of the Permanence of Equivalent Forms, *i.e.*, "A law of algebra which admits of proof subject to certain limitations is true generally provided the removal of the limitations is not *incompatible* with the truth of the law." This principle appears to the writer to be modelled on the tactics of that sort of cuttle-fish which, when in difficulties, squirts out a cloud of sepia and escapes in the confusion.

Digitized by Google

and $(-27)^{\frac{1}{3}} = -3$

Similarly $32^{\frac{1}{5}} = 2$

and $(-32)^{\frac{1}{5}} = -2$

In words, the odd root of a negative number is a negative number or fraction, and the odd root of a positive number is a positive number or fraction.

One other important case remains. What is the square root of a negative number, $(-9)^{\frac{1}{2}}$ for instance? First let us simplify the matter a little. Since

$$-9 = -1 \times 9$$

$$(-9)^{\frac{1}{2}} = (-1)^{\frac{1}{2}} \times (9)^{\frac{1}{2}} \text{ (see para. (B 4) above)}$$

$$= (-1)^{\frac{1}{2}} \times 3 \text{ or } \sqrt{-1} \times 3$$

In a similar manner the square root of any negative number or fraction can be reduced to the form $\sqrt{-1} \times a$, and the feature common to all such cases is $\sqrt{-1}$. Also any even root of a negative number will depend on this same thing, for the $2p$th root of -1 is the pth root of the square root of -1. Now there is no number which, multiplied by itself, will give -1, so the symbol $\sqrt{-1}$ or $-1^{\frac{1}{2}}$ is, as far as pure number is concerned, meaningless. Later on an interpretation will be found for it in relation to quite a different set of ideas, and the symbol will prove to be of great service in connection with alternating current theory. For the present, however, it will be sufficient to say that the square root of a negative number is non-existent as a number, or, as the mathematicians have not very happily designated it, is an imaginary quantity.

Examples. Indices.

1. Show that $(x^{\frac{1}{2}} + a^{\frac{1}{2}})^2 = x + 2a^{\frac{1}{2}}x^{\frac{1}{2}} + a$

and $(x^{\frac{1}{2}} - a^{\frac{1}{2}})(x^{\frac{1}{2}} + a^{\frac{1}{2}}) = (x - a)$

2. Simplify $\dfrac{a^{\frac{2}{3}}\, b^{\frac{11}{6}}\, c^{\frac{2}{3}}}{b^{\frac{2}{3}}\, c^{\frac{2}{3}}} - \dfrac{a^{\frac{1}{2}}\, b^{\frac{2}{3}}\, c}{a^{\frac{1}{2}}\, b^{\frac{1}{2}}}$

Show that it is equal to

$$abc(a^{\frac{2}{3}}\, b^{-\frac{11}{6}} c^{\frac{1}{3}} - a^{-\frac{1}{2}})$$

3. If $a^x = \alpha$

$a^y = \beta$

$a^z = \gamma$

and $\alpha\beta = \gamma$

what is the relation between x, y, and z? Further, if $\gamma = \alpha/\beta$ what is the relation between x, y, and z?

4. Show that $(a+b)^3 = a^3 + 3a^2b + 3ab^2 + b^3$

$(a-b)^3 = a^3 - 3a^2b + 3ab^2 - b^3$

$(a^3 - b^3) = (a-b)(a^2 + ab + b^2)$

$(a^3 + b^3) = (a+b)(a^2 - ab + b^2)$

5. What are the factors of $(a^4 - b^4)$ and of $(a^6 - b^6)$ and $(a^6 + b^6)$?

6. Show that

$$\left(\frac{x^a}{x^b}\right)^{(a+b)} \times \left(\frac{x^b}{x^c}\right)^{(b+c)} \times \left(\frac{x^c}{x^a}\right)^{(c+a)} = 1.$$

(To be continued).

Amateur Long-Distance Work.

By Hugh N. Ryan (5BV). **[R545.009.2**

FOR some time now, it seems, very little amateur long-distance work of great interest has been done. This is due, no doubt, to the fact that the summer weather has tempted most of the experimenters to other pursuits (though we do not think that this fact can legitimately be added to data collected on the "effect of weather upon wireless signals.")

Although there is so little activity to be noted, yet a short review of the present state of long distance work may be given.

The most noticeable feature of recent work is the greatly increased number of stations regularly using low power. Only a short time ago, useful low-power work, though quite often accomplished, was always regarded as something of a "stunt," and with a few exceptions the stations using it usually went back to fairly high power for ordinary serious work. Recently, however, not only have the stations habitually using low power increased their useful range very greatly, but many (if not most) have

Digitized by Google

reduced power. It has been evident for a long time that this must happen, as the power used in many cases was certainly excessive in present-day circumstances. It is satisfactory to note that this reduction of power seems in all cases to have improved rather than prejudiced long-distance results. One imagines (with some relief) the number of valves which are no longer overloaded and the number of condensers which are now called upon to stand a voltage less in excess of that for which they were designed, and one wonders the less at the improvement in results, not to mention the improvement in note quality in some cases.

It is also to be noticed that more work is being done on Sunday mornings and afternoons, and less at night, than hitherto. Daylight work is gradually becoming more important than night work, with its accompanying disadvantages, now that daylight does not present so great a barrier. One of the greatest factors in the opening up of daylight work, and hence of growing importance nowadays, is the use of the waves of about 20 metres. It will be remembered that when these wavelengths were first explored, chiefly by 5LF on this side of the Atlantic, they were fairly widely used for a time, but results were found to be too uncertain for the patience of most amateurs, and they subsequently became almost neglected by the majority of stations.

There are signs now, however, of a reviving interest in these waves, with perhaps the promise of more patience in their investigation. Such signs take the form of good results by a very few stations rather than the presence of a lot of stations on this wave, but it is at any rate a good beginning, and it is hoped that more stations will soon be heard there. It should be emphasised that, whatever may be the disadvantages of 20 metres for ordinary winter night-time work, it is certainly a most useful wave for daylight DX in the summer, and perhaps the experience gained in this connection will help to overcome the difficulties of using it in the winter.

Judging by casual listening, the station now doing the most useful work on 20 metres is 2LZ, while a number of Northerners are also heard there, and 2SZ is between the two usual bands, on 32 metres, with crystal control. The chief difficulty at present on 20 metres is undoubtedly the lack of stations with which to work.

Some details of amateur long-distance work in Austria have been received, which will doubtless be of interest to the many amateurs who have heard or worked Austrian stations, now often heard in this country. They all use call-signs consisting of the letter Ö followed by two more letters. They appear to work on a variety of wavelengths, but most useful work is done on 45 metres or thereabouts. Very good results are obtained by these stations, especially on low power. The two best known stations are ÖAA and ÖAB, the former on 46 metres with 10 to 20 watts, and the latter on 58 metres with considerably less power.

Reports from this country for Austrian stations may be sent to ÖAA (Th. Mossig, Wien 1, Am Hof 13, Austria).

In the same way that interest among DX receivers centred, some years ago, round the "record" number of American stations received by any British amateur, a similar interest is now aroused by reception of Australian and New Zealand signals. While there is no scientific merit in "mass reception" there is undoubtedly a certain competitive interest attaching to it, and many have tentatively claimed the record. The best we have yet heard of is the record of a Birmingham receiver (Mr. T. S. Calder) who had, up to the beginning of June, heard 66 Australasians.

[Reports on interesting work carried out should be sent promptly to Mr. H. N. Ryan, c/o The Editor.]

Digitized by Google

D.C. Instruments in Wireless Receivers.

By J. F. Herd, A.M.I.E.E., M.I.R.E. **[R251**

THE need for an accurate knowledge of his D.C. values and adjustments (filament, anode, etc.), is one which frequently impresses itself on the wireless experimenter, and causes him to regret the insufficient use of D.C. measuring instruments in most wireless receivers. There is no doubt that for serious quantitative work such instruments are essential, and even for less accurate work they are very desirable in the interests of approximate constancy of performance. Expense is the only serious argument against them.

While it is readily possible to arrange by switching for one D.C. instrument to be transferred from one anode circuit to another, the arrangement is often somewhat complicated. If the instrument is desired also to be used for other circuits, *e.g.*, grid or filament, considerations of capacity may make such switching undesirable.

The use of ordinary pattern telephone jacks on the set, with the D.C. instrument joined to the corresponding two-point plug, provides perhaps the most complete solution for the application of one measuring instrument to different parts and circuits of the set.

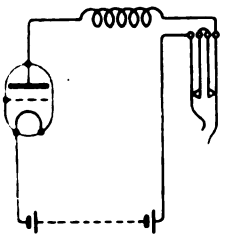

Fig. 1*a*.

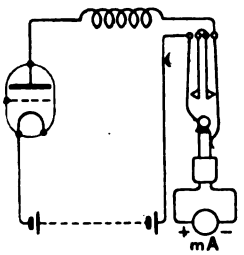

Fig. 1*b*.

Fig. 1*a* shows an arrangement which has been found convenient for providing access to anode circuits. The inner springs of the jack being shorted together, the connections of the anode circuit, when no plug is inserted, are completed through the outer springs and are perfectly normal. Insertion of the plug joins the milliammeter directly into the anode circuit for measurement of the steady current, as shown in Fig. 1*b*. A jack so wired into each anode circuit of any number of stages thus permits one instrument to be transferred quickly from one circuit to another, or to be left semi-permanently in one position for any particular purpose. If so left, especially in a H.F. circuit, the milliammeter should be by-passed by a condenser, which can, of course, be connected externally to the milliammeter itself.

The use of a suitable series resistance in conjunction with another jack readily enables

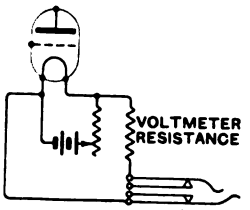

Fig. 2.

the same milliameter to be used as a voltmeter. For example, a milliammeter reading a scale maximum of 5mA can be used as a voltmeter, reading up to 5 volts, if used in series with a resistance making up a total resistance of 1 000 ohms.

Fig. 2 shows how this can be used for checking filament voltage. In this case the inner springs of the jack are *not* connected together, so that the jack circuit is open until the milliameter is plugged in. So used, the accuracy of the instrument becomes a function of the accuracy of the series resistance required to give the necessary conversion to volts. If, however, the measurement of absolute voltage is less important than the maintenance of an optimum working point or constant adjustment—as is often the case—some latitude becomes possible.

A similar arrangement can also be applied for use as a voltmeter on a potentiometer or other voltage measurement. In the case of a centre-tapped potentiometer two jacks, mutually reversed with respect to

Digitized by Google

each other, can be used in conjunction with one series resistance to give the effect of a centre-reading voltmeter.

Such an arrangement is shown in Fig. 3. With a suitable series resistance for the scale of voltage required, the milliammeter in one jack can be used to read grid 0 to — max., and the other grid 0 to + max.

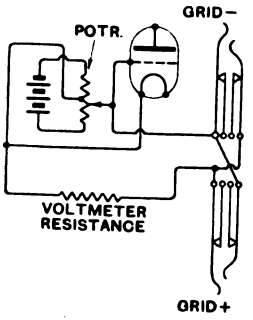

Fig. 3.

From the foregoing, the use of a jack with a suitable resistance also permits the instrument to be used as a voltmeter on the H.T. battery, a check of its voltage being frequently very desirable. Indeed, the extended use of the one instrument to many voltmeter applications is simply a matter of making and measuring with sufficient accuracy, the requisite series resistances for the scales of voltage desired.

The milliammeter can also be used as an ammeter measuring heavier currents, *e.g.*, that of the filament, a measurement which is sometines desirable with certain valves. This can be done by permanently shunting the *outer* springs of jack with a shunt such as will reduce the reading to amperes.

This arrangement is shown in Fig. 4, where *S* is the shunt, which permanently completes the circuit even when the plug is not inserted.

The adjustment of this shunt is a matter of experiment and must be done with some care. To convert the usual pattern of milliammeter to an ammeter reading up to a maximum of 2 or 3 amperes, a very short length of, say, No. 16 or 18 Eureka will usually be found suitable. The adjustment is best done by over shunting, subsequently increasing the resistance of the shunt by gradual filing. Final adjustment or re-check should be done after wiring the jack into the set, as there is often a tendency for the shunt to be moved by the softening of the solder in wiring into the apparatus. It should also be noted that the same shunt may not give consistently similar results if used with different instruments, each of the same nominal pattern.

One good instrument can thus be utilised to measure all the D.C. constants in which one is ever interested in a wireless receiver, and a system of telephone jacks—especially if purchased from ex-Government stock—is very much cheaper than a number of high-grade ammeters or voltmeters.

The instrument need not even be built into the set, but can be left on the bench with its plug attached, remaining available for other purposes.

The use of jacks also permits the ready introduction of, say, a more sensitive type of galvanometer if required for any particular measurement, while the jacks can also

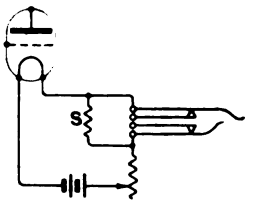

Fig. 4.

be used for the insertion of telephones into any anode of the L.F. system—a matter of considerable advantage in many experiments. It is, indeed, frequently desirable to be able to gain quick access to an anode circuit, and other uses may readily suggest themselves to the experimenter.

It is, of course, necessary to maintain some convention of wiring, so that the same instrument may be used throughout—*e.g.*, it can be arranged that the tip of the plug shall be joined to the + terminal of the instrument, and the jacks wired accordingly (as in the diagrams).

Digitized by Google

Abstracts and References.

Compiled by the Radio Research Board and reproduced by arrangement with the Department of Scientific and Industrial Research.

R000.—WIRELESS IN GENERAL.

R084.—MAPS AND WIRELESS WAVES.—R. Keen. (*Wireless World*, 21st July, 1926, pp. 73-76.)

An account of methods of indicating the track of wireless waves over the earth's surface.

R100.—GENERAL PRINCIPLES AND THEORY.

R112.—DAS GESETZ DES TIEFEMPFANGS IN DER DRÄHTLOSEN TECHNIK.—W. Schottky. (*Zeitschrift für Hochfrequenz*, 27, 5, pp. 131-141.)

Applying the classical reciprocal relation of oscillation theory to acoustics, Rayleigh (*Theory of Sound*, Vol. I., § 109) has formulated the "Law of low reception," which states that when receiving quasi-spherical waves, the ratio of the energy picked up from the sound field to that sent out increases with the square of the wavelength, and therefore efficiency reception becomes greater the lower the frequency. The author has attempted to formulate a corresponding law for electrodynamic radiators and in this article gives the results of his deliberations in so far as they bear on radio technique.

It is explained at the outset that in dealing with problems of wireless reception we have a choice of two methods: a direct and an indirect one. The direct method, by which most of the facts already known have been obtained, takes the field of the wave being received as given, and from it calculates the effective alternating E.M.F. in the antenna and the currents and tensions in the circuits connected to it. The other method does not study the receiving properties of the receiving antenna under investigation, but its transmitting properties instead, and the effect that its radiation would have on the transmitter that is being received. This indirect method is said to be of advantage when the receiving characteristics of the transmitter and the transmitting characteristics of the receiver can be more easily calculated than the receiving characteristics of the receiver under investigation. The conditions for which this method of reciprocal relation is applicable as well as some fundamental theorems for dipole antennæ that follow from it have already been given in this *Zeitschrift* (A. Sommerfeld, 26, 4, pp. 93-98.)

R113.—NOTES ON WIRELESS MATTERS.—L. B. Turner. (*Electrician*, 9th July, 1926, pp. 42.-43.)

Discussion of wave propagation, comparing the propagation that would occur in four ideal simple limiting cases:—

(*a*) With a flat perfectly conducting ground bounded by a perfect vacuum.

(*b*) The case (*a*) modified by the addition of a perfectly conducting upper layer parallel to the ground.

(*c*) The case (*b*) modified by making the ground spherical instead of flat.

(*d*) With the earth spherical and without an atmosphere.

R113 & 114.—MESURES DU CHAMP DES PRINCIPALES STATIONS EN AMÉRIQUE DU SUD.—P. Borias. (*L'Onde Electrique*, June, 1926, pp. 284-295.)

These observations were carried out during 1923 and 1924 for the Compagnie Générale de T.S.F., at the Transradio International receiving centre at Villa Elisa, near Buenos Ayres. They were made on the signals of the long-wave stations most easily received in the Argentine Republic, namely: New York, Sainte-Assise, Bordeaux and Honolulu. The method is described in detail. Though thought out independently, it is similar to that employed by Pickard and Englund, utilising ohmic coupling between a constant local transmitter and the aerial receiver. The results for the months of October, 1923, and February, 1924, are tabulated. It was found generally that waves from the north and north-east gave a figure pretty near that furnished by Austin's formula, sometimes less, with a characteristic absorption at seven o'clock local time, whatever the season. Waves coming from the west over the Pacific, on the other hand, were always much stronger than would be expected from the formula.

As concerns atmospherics in the Argentine, these came generally from a north-north-easterly direction, their nucleus appearing to be very distant. On to this background of directional disturbances, others more violent are sometimes superposed, due to local storms and atmospheric conflict.

R113.5.—RADIO WEATHER—"GOOD" AND "BAD."—E. van Cleef. (*Radio News*, August, 1926, pp. 113-184.)

In the absence of precise investigations of the subject, the following preliminary qualitative results are given by the author: Reception is clearest and strongest when the path of the waves is at right angles to the isobars. Reception is weaker when waves pass from one pressure area across another than when they are confined to a single area. Static is most frequent when the isobars are far apart, that is, when the waves travel across areas of little difference in air pressure.

As concerns the actual state of the weather, as good results may be obtained when it is very windy and raining or snowing as when the skies are clear: all that is necessary is the right distribution of pressure.

Another observation of interest is that when the waves travel in a path parallel to the isobars fading occurs.

Digitized by Google

R113.5.—WEATHER AND RADIO. (*Scientific American*, July, 1926, p. 70.)

Investigations of radio wave propagation by engineers at WGY show that signal strength falls off rapidly during the first 300 miles but becomes stronger at 600 miles and then gradually weakens. A study of the zones in which fading occurs shows that it is worst between 200 and 500 miles from the transmitting station. Therefore broadcast service is more reliable at 600 miles than at 300 miles because fading is less and the volume is somewhat increased. Reception reports indicate that the rate of fading increases steadily as the wavelength grows shorter. Temperature seems to have no effect upon the signals, although static increases as the temperature rises, especially in summer. The barometric pressure seems to make little difference in signal strength when both transmitter and receiver are at the same pressure. When transmission is from a high to a low pressure area, transmission is best at short and at long distances, but at a medium distance of 600 miles it is best from an area of low to an area of high pressure.

R113.6—DISCUSSION ON "POLARIZATION OF RADIO WAVES."—G. Pickard. (*Proc. Inst. Radio Engineers*, June, 1926, pp. 391—393.)

Mr. Pickard's article appeared in *Proc. I.R.E.* for April (these abstracts, *E.W. & W.E.*, June, 1926, p. 381).

Systematic measurements on long-wave stations show great irregularities in direction-finder bearings during the hours of darkness, and it has always been assumed that these irregularities mean actual change in the direction of propagation.

Dr. Alexanderson states here that a number of facts have recently been brought out through work on polarisation of short waves which lead one to think that the evidence collected in the past may be given a different interpretation. We find now in dealing with short waves that such apparent changes in direction of wave propagation can be reproduced regardless of daylight by controlling the plane of polarisation of the radiated wave, and evidence is given here from which it can be inferred that the apparent changes in direction of long waves are also due to the presence of horizontally polarised wave components.

R113.6.—POLARISED TRANSMISSION.—R. Kruse. (*Q.S.T.*, June, 1926, pp. 9-16.)

A semi-popular discussion of the subject including Dr. Alexanderson's polarised wave model.

Direction tests carried out at different heights from the ground indicate the presence of a horizontal and a vertical wave component with different velocity of propagation and suggest that directional errors do not mean that the wave actually comes from unexpected directions, but characterise waves partially polarised in a horizontal plane.

R113.6.—REFRACTION OF SHORT RADIO WAVES IN THE UPPER ATMOSPHERE (Abridged).—W. G. Baker and C. W. Rice. (*Journ. Amer. Inst. Elect. Engineers*, June, 1926, pp. 535-539.)

The following synopsis is given :—

The paper shows that the striking phenomena of short-wave radio transmission (*i.e.*, below 60 m.) can be quantitatively accounted for on a simple electron refraction theory in which the effect of the earth's magnetic field and electron collisions may be neglected as a first approximation. The distribution and number of electrons per unit volume in the upper atmosphere required on this theory to account for the meagre experimental data, appear to be in general accord with the values required in the explanation of the diurnal variations of the earth's magnetic field, auroral and long-wave radio transmission.

The paths taken by the waves from an antenna to distant points on the surface of the earth are calculated. The path calculations give a definite picture of the now familiar skip distance effects. Ideal signal intensity curves (*i.e.*, neglecting absorption and scattering) are given, which show how the energy sent out by a transmitter is distributed over the surface of the earth. A focusing of energy just beyond the skip distance, and again just inside the point where the ray tangent to the ground at the transmitter comes back to earth, is clearly shown. The reflection of waves at the surface of the earth is also considered.

The results of these calculations make it possible to estimate the most suitable wavelengths for night and day communication between any two points on the earth's surface. It is also pointed out that there will be a minimum wavelength, in the vicinity of 10 metres, below which long distance communication becomes impossible. It is shown that from the point of view of long distance communication low angle radiation is most effective. The ray paths and energy flux density in the wave front of the sky waves are independent of the plane of polarisation of the transmitter. The effects of polarisation on the reception problem are not discussed.

The discussion after the reading of the paper is given on p. 571.

R113.7.—THE ATTENUATION OF WIRELESS WAVES DUE TO THE RESISTANCE OF THE EARTH.—Dr. Smith-Rose and R. H. Barfield. (*Journ. Inst. Elect. Engineers*, July, 1926, pp. 766-770.)

The following summary is given :—

The paper calls attention to the present condition of knowledge on the subject of the attenuation of wireless waves travelling over the earth's surface, due to energy absorption by the earth itself. The theories put forward on this problem by Sommerfeld and Zenneck are briefly outlined, and it is shown that the latter has taken account only of a special case of the more general theory of Sommerfeld. The results deduced from this theory have been worked out for some typical practical cases of both short- and long-wave transmissions, but, owing to the complete lack of experimental evidence, no practical test of the theory has yet been made. In view of the importance of a knowledge of ground absorption in connection with the complete study of the propagation of wireless waves of all lengths over the earth's surface, it is highly desirable that a systematic experimental investigation should be carried out in the near future.

Digitized by Google

R113.8.—VERSUCHE ÜBER DIE RICHTUNG DER HÖHENSTRAHLUNG IM MEERESNIVEAU.—L. Myssowsky and L. Tuwim. (*Zeitschrift für Physik*, 36, 8, pp. 615-622.)

From observations made at Leningrad on the intensity of the penetrating cosmic radiation in different directions, it was concluded that the intensity is uniform and independent of the azimuth, the rays all coming to the earth straight from above.

R113.8.—LES GRANDES PERTURBATIONS ELECTROMAGNÉTIQUES DES QUATRE PREMIERS MOIS DE 1926, D'APRÈS LES ENREGISTREMENTS DE L'OBSERVATOIRE DE L'EBRE, TORTOSA (ESPAGNE).—I. Puig. (*Comptes Rendus*, 14th June, 1926, pp. 1482-1483.)

R113.9.—POLARISATION OF RADIO WAVES.—Dr. Alexanderson. (*Jour. Amer. Inst. Elect. Engineers*, July, 1926, pp. 636-640.)

A paper presented at a regional meeting of the A.I.E.E., Niagara Falls, May, 1926. Evidence is given leading the author to believe that horizontal polarisation is not confined to short waves. Direct observations of horizontal polarisation with long waves could be made only at great heights, but indirect observation through the effect of ground currents can be made by ordinary direction finders on any wavelength. If the theory is correct it means that the irregularities of direction-finder indications recorded on long waves can be explained by the presence of horizontally-polarised wave components and are not due to the wave actually coming from unexpected directions.

R114.—ON THE NATURE OF ATMOSPHERICS, II.—Dr. Appleton, R. A. Watson Watt, and J. F. Herd. (*Roy. Soc. Proc., A.*, July, 1926, pp. 615-653.)

1. The paper describes the development of work, reported in an earlier communication (April, 1923), on the oscillographic examination of the characteristics of atmospheric electric disturbances of short duration. The method now involves the use of a cathode-ray oscillograph with a time-base which is both uniform in scale and unambiguous as to time-sense. The apparatus and methods described include a series of station tests for checking the performance of the assembly. The basis of the methods used is re-discussed.

2. Statistical analyses of approximately 8,000 individual drawings of atmospheric wave forms are tabulated and summarised. A more detailed sub-classification is based on the improved discrimination afforded by the unambiguous time-base. Sensibly aperiodic discharges were three times as numerous as were quasi-periodics; predominantly positive discharges were one and a-half times as numerous as were negatives. The mean quasi-periodic had a peak field strength of 0.156 v/m., the aperiodic 0.075 v/m. The negative discharges of both types were stronger by 20 per cent. to 30 per cent. than the positives. The mean quasi-periodic had a duration 3.125μs, 30 per cent. greater than that of the mean aperiodic.

The most frequently occurring form of atmospheric was a symmetrical rounded positive aperiodic, forming 14 per cent. of the whole distribution. The most frequent quasi-periodic, forming 7½ per cent. of the distribution, had a peaked positive half-cycle followed by a single rounded negative half-cycle.

3. Examination of the fine structure of atmospherics shows a frequent "ripple period" of the order of 100μs. Typical oscillograms of fine structure as observed in dark hours in the Tropics are reproduced.

R114.—ON THE NATURE OF ATMOSPHERICS, III.—Dr. Appleton, R. A. Watson Watt, and J. F. Herd. (*Roy. Soc. Proc., A*, July, 1926, pp. 654-677.)

A paper, continuing the account of the investigation of atmospherics, summarised as follows:—

1. The experiments on atmospheric wave-forms recorded in preceding papers have been supplemented by observations in the nett changes of the earth's electric field, resulting from lightning discharges. These observations have been made at Aldershot, Cambridge, Helwan and Khartoum, and show that, at distances greater than 50km from the discharge channel, negative changes of field are at least 1.7 times as frequent as are positive changes. Since the field-changes at such distances may be taken as indicative of the sign of the thundercloud moment destroyed by the flash, it is concluded that lightning flashes resulting in the destruction of positive electric moments are at least 1.7 times as frequent as are those of opposite character.

2. A satisfactory reconciliation with Prof. Wilson's determination of the electric field changes produced by lightning discharges within 25km, in which an opposite preponderance of sign was obtained, is possible if thunderclouds are assumed to be bi-polar. Other evidence of such bi-polarity is cited.

3. It is shown that a frequently occurring type of thunderstorm mechanism is one which elevates the positive charge above the negative. This type of thundercloud polarity is that required by Prof. Wilson's theory of the maintenance of the earth's negative charge.

4. Lightning discharges are shown to be capable of producing radiation fields similar in wave-form and magnitude to those of atmospherics of distant origin.

5. An Appendix deals with the theory of the linear time-base used in the observations on wave-forms.

R114.—A STATIC RECORDER.—H. T. Friis. (*The Bell System Technical Journal*, April, 1926, pp. 282-291.)

The following synopsis is given:—

This paper discusses different types of apparatus for recording static and also describes a new instrument in which the output of the set is kept constant by automatic control of the amplification, this amplification then being recorded as the relative measure of static. The set makes use of a flux-meter with zero restoring torque by means of which the rectified output current arising

Digitized by Google

from static interference is integrated over a period of ten seconds. The following five seconds are required to adjust the gain of the amplifier and record the charge in gains from an arbitrary level. The gain is recorded in steps of 4 T.U. which correspond to a power amplification change by approximately a factor of 2.5. A record is shown during which the intensity of static changed by a factor of more than 10,000.

R114.—Sur des Enregistrements du Champ Electrique de l'Atmosphère jusqu'à 20,000 m. d'Altitude.—P. Idrac. (*Comptes Rendus*, 28th June, 1926, pp. 1634-1635.)

A brief account of measurements pointing to the conclusion that the electric field of the atmosphere can attain high values (exceeding 40 volts per metre) at about 10-12km, in the neighbourhood of the isothermal layer.

R114.—Direction Determinations of Atmospheric Disturbances on the Isthmus of Panama.—Dr. Austin. (*Proc. Inst. Radio Engineers*, June, 1926, pp. 373—376.)

It has long been known that atmospheric disturbances in general originate over land rather than over the ocean and that the sources of tropical disturbances seem to follow the sun in its changing path between the northern and southern hemispheres.

Like this in Panama (10° north), the atmospheric disturbances would be expected to come chiefly from the mainland of South America in winter, and from the direction of Central America and Mexico in summer. During the rainy season, however, a considerable amount of local disturbance

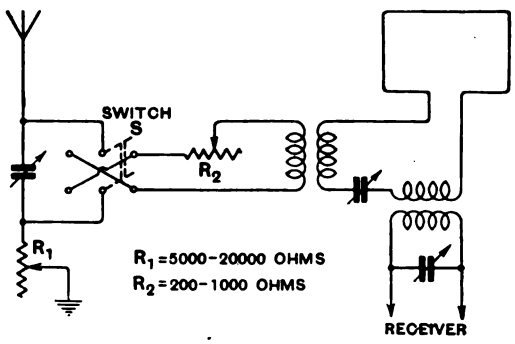

could also be expected, generated in the low mountain chain which forms the backbone of the isthmus. The purpose of this investigation was to determine to what extent these local disturbances outweigh those coming from the larger land masses.

Directional observations were made on the atmospheric disturbances at the U.S. naval stations at Balboa and Colon at the two ends of the Panama Canal.

The apparatus used is shown diagrammatically above.

It consisted of an 8 ft. coil antenna with 48 turns and a small single-wire antenna forming a unidirectional receiving combination. It is explained how good readings can be obtained by this method when no direction at all can be observed on the coil antenna alone.

The results of the observations from February to November, 1925, are tabulated—the wavelengths employed were 14,000 and 20,000m.

From the data the following conclusions are drawn :—

1. During the dry season, from about January 15th to April 1st, the atmospheric disturbances both at Balboa and Colon come almost entirely from the South American continent, from the direction of the high Andes in Northern Colombia.

2. When the dry season comes to an end and local storms begin to appear, the local disturbances from the low mountains of the isthmus begin to be prominent. This displaces the prevailing direction at Balboa from the south-east to the north, at times, but has little effect on the direction at Colon since the mountains containing the local centres of disturbance here lie to the south and east, or roughly in the direction of the disturbance sources in Colombia.

3. In mid-summer, while there is probably much disturbance from Central America and Mexico, the local disturbances from the isthmus mask this to such an extent that the prevailing direction at Colon continues roughly south-east, while at Balboa the distant and local disturbances unite to give a northerly or north-westerly direction.

4. That from northern transmitting stations, Balboa and Colon should give nearly equally good unidirectional reception in the dry season, but during the rest of the year, when the disturbance conditions are more troublesome, Colon should have considerable advantage over Balboa.

R125.—Richtcharakteristiken von Antennenkombinationen.—Directional Characteristics of Combined Antennæ.—A. Esau. (*Zeitschrift für Hochfrequenz*, 27, 5, pp. 142-150.)

In this article a general formula is drawn up for the directional characteristic of the combination of two antennas, of which both can be either directional or undirectional or one only directional. Since errors have been observed in directional determinations which might in many cases be due to the waves arriving in a slanting direction, the equation for the characteristic has been developed for a ray incident at any angle, and not confined to the horizontal plane. The equation also takes into account the alteration of the plane of polarisation, which has been found to occur particularly with short waves, and its effect on the form of the characteristic.

Let the two antennæ A_1 and A_2 be a distance d apart, and their different characteristics, represented in polar co-ordinates, be

$$r_1=f(\alpha, \beta, \gamma) \quad \text{and} \quad r_2=g(\alpha, \beta, \gamma),$$

where α is the angle that the incident wave makes with the line joining the feet of the antennæ in the horizontal plane, β is the angle of inclination to this plane, and γ the angle through which the plane of polarisation has been turned from its normal position.

Denoting the wavelength by λ corresponding to a circular frequency ω and the phase difference by

Digitized by Google

ϕ, we obtain for the characteristic of the combination of the two :—

$$r = r_1 + r_2 = f(\alpha, \beta, \gamma) \sin \omega t + g(\alpha, \beta, \gamma), \sin(\omega t + \phi)$$

or on simplifying

$$r = \sqrt{(f-g)^2 + 4fg \cos^2 \phi/2}$$

where $f(\alpha, \beta, \gamma)$ and $g(\alpha, \beta, \gamma)$ are abbreviated to f and g.

The two special cases are discussed of the combination of

(1) Two undirectional antennæ, and
(2) Two directional (frame) antennæ.

Undirectional antennæ can be combined either so that the principal direction of incidence coincides with the line joining the feet of the antennæ (series arrangement) or is perpendicular thereto (parallel arrangement). The sharpness of the characteristic for waves incident horizontally is considerably greater with the parallel arrangement than the series. For inclined waves ($\beta \gtrless 0$), on the other hand, the directivity of the characteristic is in general sharper for the series arrangement than for the parallel.

Two frames can also be combined either in series or in parallel. The characteristic is sharper with the combination than with a single frame and also with the parallel arrangement than the series. For waves incident at an angle, the sharpness of the characteristic decreases with increasing angle of inclination.

R132.—Small-Shot Effect and Flicker Effect. —W. Schottky. (*Physical Review*, July, 1926, pp. 74-103.)

J. B. Johnson observed, under certain conditions (oxide coated and tungsten filaments, low frequencies, electron currents high but not high enough for space charge effects), voltage fluctuations across connected resonant circuits which were much larger than the theory of the small-shot effect would lead one to expect. Analysing Johnson's curves, it is found that this effect increases as the square of the electron current instead of as the first power as in the case of the small-shot effect. This fact supports Johnson's hypothesis that the effect is independent of the shot effect and that it should be attributed to fluctuations in the properties of the surface (flickering) resulting in fluctuations in the electron current. The trend with the natural frequency of the connected circuit is likewise different from that observed in the shot effect. The elementary atomic process underlying the flicker effect is the appearance of an individual foreign atom or molecule in the surface of the cathode, changing the ability of the surface to emit electrons so long as the foreign atom remains. The influence exerted upon the current by foreign atoms in the surface may be calculated with sufficient approximation from the electrical image theory and Langmuir's doublet theory. A value is given for the mean square voltage fluctuation produced by the effect in terms of the impedance of the connected circuit, and formulæ are given for circuits of various kinds. Measurements with two circuits, one being resonant and the other a pure resistance, should provide a definite check of the calculated length of stay of the foreign atoms.

R132.—Uber die Kompensation der Anode-rückwirkung (On compensating back coupling in a valve).—L. Müller. *Archiv. für Elektrotechnik*, June 14th, 1926, pp. 251—260.

Certain theoretical deductions are made which agree qualitatively with the results of experimental tests.

R132.—Beiträge zur Untersuchung der Verstäkertransformatoren. (Contributions to the Investigations of Amplifier Transformers.—L. Müller (*Archiv. für Elektrotechnik*, June 14th, 1926, pp. 219—250.

Detailed theoretical and experimental consideration of the grid transformer.

R134.—Les différentes Détections par Lampe et l'amelioration de la Détection.—Stéphane Lwoff. (*Radio Revue*, July, 1926, pp. 91-98.)

An instructional article on valve rectification. After first considering energy in an alternating or oscillating circuit, and the general action of rectification, the author deals with the theory of rectification and considerations of power and maximum efficiency. Various methods of valve detection are then discussed, *e.g.*, with two-electrode valves, with three-electrode valves using grid or anode rectification, autodyne, etc.

R138.—Austrittsarbeit bei Oxydkathoden.—H. Rothe. (*Zeitschrift für Physik*, 36, 9/10, pp. 737-758.)

The electron emission energy was determined for several valves with oxide cathodes and found to be extremely small, both when using Richardson's equation and the cooling effect produced by the emission. It was observed that when the emission current was below the saturation value the cooling effect was considerably greater than that corresponding to the energy of emission. With regard to the relation between the emission from these cathodes and the amount of gas removed from them, it appears that it is not possible entirely to free them from gas, owing to the emission current passing radially through the oxide layer decomposing the oxide and thus constantly producing new gas. It is thought that the high emission of these cathodes is due to the metal particles produced by this decomposition which remain embedded in the oxide. Study was made of a fatigue effect which was observed in nearly all the valves, producing a rapid falling off of the emission current with the time.

R138.—Maintaining a Constant Reading on an Ammeter in the Filament Battery Circuit of a Thermionic Triode.—E. Banner. (*Proc. Inst. Radio Engineers*, June, 1926, pp. 325—331.)

The trouble experienced in determining what is a constant filament current is stated at length in a paper read before the Wireless Section of the Institution of Electrical Engineers on March 10th, 1921 : "The Effect of Electron Emission on the

Digitized by Google

Temperature of the Filament Anode of a Thermionic Valve," by G. Stead (Vol. 59, p. 427). Most of the speakers in the discussion emphasised the point and no satisfactory solution was arrived at. The present research was undertaken with the idea of supplying a solution to the problem.

The writer first states the case as generally accepted, that the switching on of the anode battery makes it impossible to maintain the filament current constant, showing that, for accurate work, a statement that the filament current was constant during any particular test is void, unless the method of connection and the position of the ammeter are given. He then describes his investigation to find whether any position of the ammeter and a method of connecting the anode battery were possible, so that the ammeter reading would be unaffected by any variation in the anode current. He succeeded in devising such a circuit, which is shown in the diagram.

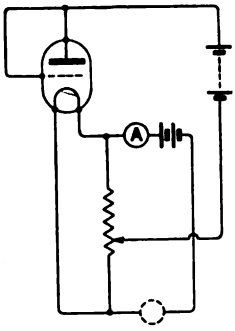

One ammeter only is used, which may be in either the positive or the negative lead, as shown.

R138.—ANLAUFSTROM UND GESCHWINDIGKEITSVERTEILUNG BEI OXYDKATHODEN.—H. Rothe. (*Zeitschrift für Physik*, 37, 6, pp. 414-418.)

The velocity distribution of electrons emitted from industrial triodes with oxide cathodes was determined by measurement of the initial current. Maxwell's law of distribution was found obeyed, although the average velocity of the electrons was 1.5 to 2.2 times as large as required by the cathode temperature according to the kinetic theory of gases.

R138.—A TEMPERATURE SCALE FOR TUNGSTEN. —H. A. Jones. (*Physical Review*, July, 1926, pp. 202-207.)

Account is given of the measurement of the temperature variation of the resistance of tungsten from 273°k to 3655°k, and the temperature variation of the rate of radiation from tungsten filaments. The results are tabulated and compared with those of other investigators.

R139.—WARUM KEHREN SICH DIE FÜR DEN LICHTBOGEN GÜLTIGEN STABILITÄTSBEDINGUNGEN BEI ELEKTRONENRÖHREN UM? (Why are the conditions of stability that hold for the arc reversed in the case of valves?)—H. Barkhausen. (*Zeitschrift für Hochfrequenz*, 27, 5, pp. 150-153.)

Arcs and valves behave exactly oppositely as concerns their stability regarding direct current (sudden changes) and alternating current (self-excitation of oscillations). All that increases stability with the arc (prevents sudden changes or oscillations) diminishes it in the case of the valve (favours these sudden changes or oscillations, and *vice versa*).

The difference physically lies in the fact that, in the arc, tension changes are caused by current changes, while in the valve current changes are caused by tension changes. Mathematically the succession of changes conditioned submits to calculation by assigning inductivity to the arc and capacity to the valve.

R.148.1.—COMMENT EVITER LES DÉFORMATIONS DE LA VOIX EN TÉLÉPHONIE SANS FIL (How to avoid speech distortion in wireless telephony.)—(*Radio Electricité*, June 10th, 1926, pp. 219-220.)

Continuation of an article begun in *Radio Electricité* for May 10th (these abstracts, p. 457, July, 1926), when deformation due to the tuning system and reaction was discussed. This instalment considers the distortion arising from detection.

R200.—MEASUREMENTS AND STANDARDS.

R210.—NEW RADIO DEVICES OF FIXED PRECISION. (*Radio News*, July, 1926, pp. 32 and 91.)

An account of the tiny apparatus, hermetically sealed and thus invariable, constructed by Dr. Loewe for measuring wave-frequencies with an error of less than a hundredth of 1 per cent.

R213.—ESTABLISHMENT OF RADIO STANDARDS OF FREQUENCY BY THE USE OF A HARMONIC AMPLIFIER.—C. Jolliffe and G. Hazen. (*Physical Review*, June, 1926, p. 815.)

Abstract of paper presented at April meeting of American Physical Society.

One method used by the Bureau of Standards in establishing radio standards of frequency consists in the "stepping up" from a known standard audio frequency to a radio frequency by the use of harmonics. The low-frequency output is carried through an amplifier arranged to distort and so produce harmonics. By means of tuned circuits a harmonic is selected which in turn serves as a fundamental for further distortion and amplification to give the desired frequency with sufficient power to operate the frequency meter under standardisation.

A fixed radio-frequency generator, such as a piezo oscillator, or a fixed audio-frequency generator, such as an electrically driven tuning fork, can likewise be standardised by the use of the harmonic amplifier with the addition of a sonometer for measuring an audio-frequency beat note produced by a harmonic from the standard audio-frequency source and the fundamental or harmonic from the fixed-frequency generator. The frequency of the beat note is impressed on the steel wire of the sonometer by means of a telephone receiver magnet. The vibration frequency of the wire is calculated by means of the constants of the wire and the tension applied.

R225.—WAVE FORM OF FREE ELECTRICAL OSCILLATIONS: SELF-CAPACITY EFFECT IN MULTILAYER COILS.—A. Astin. (*Physical Review*, June, 1926, p. 815.)

Abstract of paper presented at April meeting of American Physical Society.

Digitized by Google

Observations are made of the wave form of the free oscillations of a section or sections of a multi-layer coil, by itself and with added capacities, using the drop chronograph method developed by J. C. Hubbard (*Physical Review*, 9, 529, 1917). The results are used to determine the periods, self capacities and damping factors of the coil.

R240.—RÉSISTANCE DES CONDENSATEURS.—F. Flaud. *L'Onde Electrique*, June, 1926, pp. 263—275.

It is stated that the resistance of a condenser giving rise to losses of energy should be defined as the quotient of the loss of power corresponding to the current through it and the square of the effective intensity of this current; that it is a mistake that this definition has not always been adopted and has resulted in some confusion.

Starting from this definition the author finds expressions for these resistances in different cases and shows how they vary with the frequency. He states that the methods employed to measure these resistances are generally at fault and indicates what modifications they should undergo to render them correct.

Following the article there is a reply from M. Mesny to certain objections the author has made to what he has written on the subject.

R261.—VALVE VOLTMETERS AND THEIR APPLICATION TO HIGH FREQUENCY MEASUREMENT.—S. Chiba and S. Kitta. (*Journ. Inst. Elect. Engineers of Japan*, June, 1926, pp. 612-621.)

Three types of valve voltmeter are described :—

1. The Moullin A type, utilising the plate current-grid voltage characteristic.

2. The Moullin B type, utilising the grid current-grid voltage characteristic.

3. A third type utilising both these characteristics (to which Siemen's audio-frequency voltmeter belongs).

The authors' tests result in their recommending the third type, used with a blocking condenser and leak resistance in the grid circuit.

R281.—DIELECTRIC ABSORPTION AND THEORIES OF DIELECTRIC BEHAVIOUR.—Prof. Whitehead. (*Journ. Amer. Inst. Elect. Engineers*, June, 1926, pp. 515-524.)

Abridgement of a paper presented at the February Convention of the A.I.E.E., New York, from whom copies of the complete paper are available, including an extensive bibliography of the subject.

A brief summary of the paper is given below :—

1. Dielectric absorption is a conspicuous but little understood phenomenon: its general character is well known as shown by the decay, with time, of the changing current, residual change, etc.; however, exact and definite forms of even the empirical laws are still lacking.

2. Only solids show the complete absorption phenomena of charge and discharge. Liquids often show an apparent absorption in charging but no residual phenomena. Nearly all solid dielectrics show some absorption, though in some substances in a very pure state, *e.g.*, sulphur, quartz, paraffin, it is very small if not negligible.

3. Large changes in the absorption of solids may be caused by extremely small changes in composition. Impurities and moisture in very small amounts may cause large changes in absorption.

4. The charging absorption current merges into a final steady conduction current; both are strongly increased by increase of temperature, the absorption finally disappearing or changing into conduction.

5. The alternating losses in solid dielectrics are due almost entirely to absorption, shown by theoretical analysis and confirmed by experiment. The losses due to conductivity are usually very small compared with those due to absorption, and there is no evidence of losses of other types. There is nothing to indicate a hysteresis loss of the character pertaining to magnetic materials.

6. Theories of the ultimate nature of the phenomenon of absorption are :—

(*a*) That it arises in the mixture of two or more dielectrics, and depends only on the known quantities, conductivity and specific inductive capacity. This is Maxwell's theory.

(*b*) That it is due to anomalous relation between electric displacement and electric force, the seat of which is within the molecule or atom. (Pellat.)

(*c*) That it may be explained by Lorenz's theory of electron motion within the structure of the atom. (Décombe.)

(*d*) That it is due to water in capillaries or interstices in the body of the dielectric.

Finally, the phenomenon of absorption is in great need of further investigation.

R300.—APPARATUS AND EQUIPMENT.

R334.—THE DOUBLE-GRID TUBE.—H. Gernsback. (*Radio News*, August, 1926, p. 103.)

An enumeration of the advantages of the four-electrode valve over the triode, the chief being :—

1. An amplification factor almost three times as great without any increase in the internal output impedance.

2. The elimination of capacity effect between plate and grid.

3. Circuits of greater sensitivity and efficiency.

R334.—THE FOUR-ELECTRODE VALVE.—A. Castellain. (*Wireless World*, 21st July, 1926, pp. 90-91.)

R334.—LE "CRYPTADYNE"—UNE NOUVELLE UTILISATION DE LA BIGRILLE. (The "Cryptadyne"—A new use of the four-electrode valve).—G. Thébault. (*Radio Revue*, July, 1926, pp. 89-91.)

It is shown that when the outer grid of a four-electrode valve is at zero potential, the currents in the anode circuit and in the inner grid circuit are of nearly equal value, with characteristics, and of opposite slopes, the former increasing and the latter decreasing as a positive potential is applied to the outer grid. If an alternating voltage be applied to the outer grid with telephones in the

Digitized by Google

inner grid and anode circuits, sensibly equal sounds are heard in each telephone.

The arrangement of the figure below is shown as utilising the principle, the currents in the split primary of the transformer being additive in their magnetic effects on the secondary. Reaction is obtained in the usual manner as shown. The application of the arrangement to an additional stage is

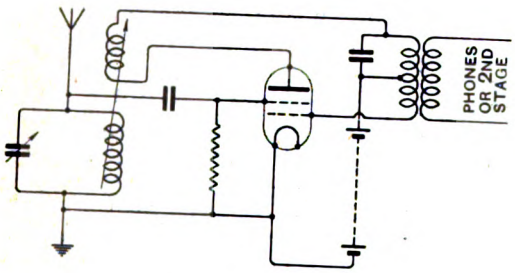

also illustrated, the transformer secondary in this case working to the outer grid of the succeeding valve, with arrangements similar to those shown in its inner grid and anode circuits. Only the usual four-electrode valve H.T. of about 12 volts is required and it is stated that excellent results have been obtained on both near and distant transmissions.

R.337.351.—Mechanical and Electrical Vibrations.—Dr. Eccles and Dr. Leyshon. (*Electrician*, 16th July, 1926, pp. 65 and 72.)

The authors have investigated some direct methods of linking a tuning fork, piezo-electric crystal, or other mechanical vibrator, with harmonic producing circuits such as the neon lamp flashing circuit, the multivibrator, or generally with conductors possessing so-called "negative resistance."

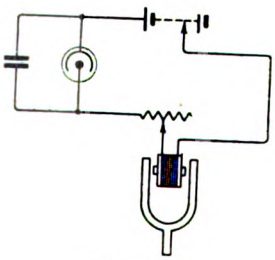

Fig. 1.

The new method is explained here as it is carried out in co-operation with a modified form of the well-known flashing circuit of the neon lamp described by Pearson and Anson (*Proc. Phys. Soc.*, p. 204, 1922).

The method consists in adding an electromagnet to the neon lamp circuit and adjusting the rate of flashing until it is approximately equal to the frequency of the given tuning fork; the fork can then be driven by means of the electromagnet. When this is done, the motion of the fork induces an electromotive force in the windings of the magnet which is sufficient to compel the rate of flashing to synchronise exactly with the frequency of the fork. Fig. 1 is a diagram of the simplest circuit, but for convenience of manipulation, the apparatus is best arranged as indicated in Fig. 2.

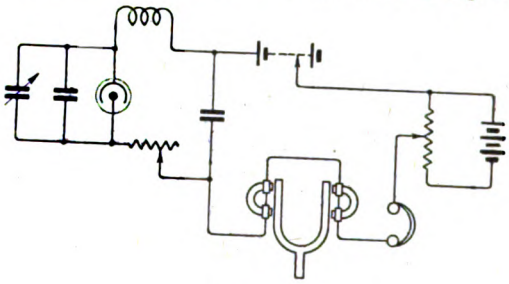

Fig. 2.

The method may be used for generating electrical oscillations of exceedingly constant frequency or for receiving wireless signals by the heterodyne method or for calibrating wavemeters.

Compared with the triode and fork, the neon lamp and fork combination is more difficult to adjust and keep in adjustment, due partly to the variation of the gas content of the lamp as time goes on. Thus the triode arrangement is generally the more reliable, while the neon arrangement is the more fertile in harmonics.

R341.—La Détection par Lampe Chauffée en Alternatif (Detection by valve, heated with alternating current).—R. Barthelemy. (*Radio Revue*, July, 1926, pp. 99-101.)

An analysis is given of the conditions of a rectifying valve in a receiver, when the filament is heated by A.C. The causes of noise are fully discussed, and a remedial filter circuit shown. Criticism is made of the vacuum of certain valves, and it is suggested that there is a need for a valve specially constructed for use with alternating current.

R342.1.—Intervalve Transformer Cores.—Dr. McLachlan. (*Wireless World*, 14th July, 1926, pp. 45-47.)

Discussion of the permeability of iron under speech amplifying conditions.

R342-7.—Description d'un Amplificateur Basse Fréquence à Grande Sélection (Description of a low-frequency amplifier of high selectivity).—A. Pagès. *L'Onde Electrique*, June, 1926, pp. 276—283.)

A paper presented at a meeting of the Société des Amis de la T.S.T., March 17th, 1926.

Description of a circuit-arrangement, for which patent rights have been applied, permitting very sharp and controllable resonance effects to be obtained. Retroactive coupling is employed in

Digitized by Google

phase opposition to the tensions to be amplified. This coupling is obtained by transformers, as perfect as possible, and the resonance effects by shunting each coupling transformer with a system of impedances presenting at least one frequency of counter-resonance; the investigation here is limited to the case where this system consists simply of one inductance and one capacity.

R343.—SHORT-WAVE RECEIVING SETS.—L. Hatry. (*Q.S.T.*, July, 1926, pp. 20-26.)

Certain points are considered in the design of sets limited to a regenerative detector with audio amplification that are said to receive little attention.

R343-8.—DISCUSSION ON "THE SHIELDED NEUTRODYNE RECEIVER" BY DREYER AND MANSON.—L. A. Hazeltine. (*Proc. Inst. Radio Engineers*, June, 1926, pp. 395—412.)

The above paper (*Proc. Inst. Radio Engineers*, April, 1926, pp. 217—247) was largely a descriptive one, giving the final results of an engineering development for which the authors were mainly responsible. It is here supplemented by a theoretical discussion of some of the considerations that enter into the electrical design of a receiver employing tuned radio-frequency amplification. The most basic theoretical considerations are those of sensitivity, selectivity and fidelity, all of which are best illustrated graphically on a resonance curve, in which amplification is plotted against frequency: sensitivity is represented by the amplification at the resonant frequency; selectivity, by the falling off in amplification as we depart considerably from the resonant frequency; and fidelity, by the uniformity of amplification in the immediate neighbourhood of the resonant frequency. The equation of the resonance curve is derived and plotted for various values of the ratio of transformation with given values of the circuit constants. The effect of varying the number of stages of amplification is also considered. With regard to the question of strays, the conclusion is drawn that the only effective way of minimising strays over the range of a receiver is to so design the audio-frequency amplifier and loud-speaker as to pass only the useful audio-frequencies and to attenuate all higher audible frequencies.

Lastly, the effects on the resonance curve of an amplifier of slight lack of resonance in the different stages are considered, due in particular to accidental misalignment of the condensers when a common control is employed.

R346.—LE MEILLEUR EXPOSÉ POUR EXPLIQUER LE FONCTIONNEMENT DE LA TELEPHONIE SANS FIL (The best discussion on the operation of wireless telephony).—J. Jammet. (*Radio Revue*, July, 1926, pp. 102-106.)

The final part of the paper which was awarded first prize in a competition by the Radio Club of France. Receiving apparatus with crystal (galena) detection is first illustrated and discussed, followed by the use of one or two stages of H.F. amplification with final crystal detection. Low frequency amplification and valve detection (by cumulative grid) are then discussed. Reaction is then explained, leading up to the oscillating circuits of a transmitter.

R351.—LUMINOUS PIEZO-ELECTRIC RESONATOR. (*Electrical World*, 12th June, 1926, p. 1307.)

Abstract of a paper by E. Giebe, appearing in *E.T.Z.*, 47, 13, 1926, pp. 380-385.

In an article published in 1922 in the *Proc. Inst. Radio Engineers*, W. G. Cady described the peculiar effect of small pieces of quartz, cut in a certain way, when subjected to an alternating current field. A combination of mechanical and electrical oscillations sets in which may lead to resonance and to vibrations of very pronounced amplitude. As the logarithmic decrement of these is very small, only about 7×10^{-4}, resonance occurs very sharply, for which reason Cady recommended the use of such crystals as resonators. The author discovered that if such a quartz rod is enclosed in a partly evacuated glass bulb, full resonance will cause a uniform glow of the rod. Partial resonance and higher harmonic oscillations manifest themselves as a partial luminosity of the rod. It is thus possible to determine by night the nature of the electric characteristics of a circuit by merely observing the quartz rod in the dark. Beautiful configurations can be produced by high harmonics, the paper containing photographs of the appearance of the quartz rod with up to the twenty-first harmonic. The use of these simple resonators is recommended for the regulation of a broadcasting station to proper wavelength.

A brief account of piezo-electric wavemeters is given in the *Wireless World* for 14th July, 1926, pp. 65-66.

R351.—QUARTZ CRYSTAL MOUNTINGS.—J. Clayton. (*Q.S.T.*, July, 1926, pp. 15-16.)

R376.3.—CAN PERFECT LOUD-SPEAKER REPRODUCTION EVER BE ATTAINED?—C. Balbi. (*Electrical Review*, 9th July, 1926, pp. 50-52.)

The reply is in the affirmative, but not by eliminating the causes that produce the irregularities in reproduction, since this proves too difficult, but by compensating for the irregularities by changing the character of the electrical input so as to neutralise their effect. This is done by dividing up the frequency range into a number of small bands by means of electric filters and bringing the response in each band to the required strength by an increase or decrease of amplification.

R380.—LA STANDARDISATION DES PIÈCES DETACHEES (The standardisation of components).—(*Radio Revue*, July, 1926, pp. 108-109.)

A note, from Le Syndicat Professionel des Industries Radio-Electrique, on the need for standardisation. Inductance coils and mounts are particularly dealt with, with notes on the dimensions and nomenclature recommended.

R382.—TRANSMITTING COILS.—F. E. Handy. (*Q.S.T.*, July, 1926, pp. 29-30.)

Digitized by Google

R500.—APPLICATIONS AND USES.

R510.—Les Nouveaux Radiophares Français (The new French radio beacons).—A. Blondel. (*Annales des Postes Télégraphes et Téléphones* June, 1926, pp. 478—491.)

Three types are distinguished :—

1. Land-fall beacons, of long range, working for five minutes at the beginning of every hour, whatever the weather. Such are being erected at La Hague, Belle-Ile, La Coubre, Porquerolles and Ouessant. A circuit diagram of this latter beacon is shown below :—

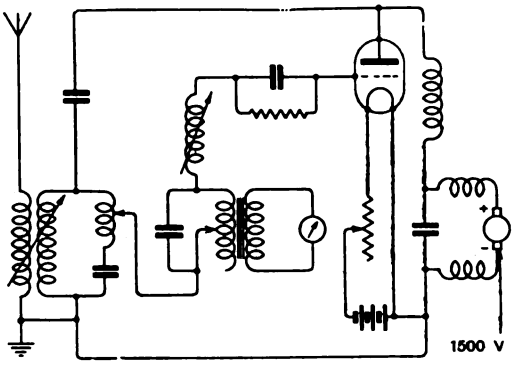

2. Fog beacons of shorter range which are to number twenty-five—Sandettié and Gris-Nez being already in operation.

3. Beacons at the entry to ports, of which there will be nine (Boulogne, Havre, etc.).

All three types will work automatically and employ in general modulated continuous waves.

R542.—Methods of High Quality Recording and Reproducing of Music and Speech Based on Telephone Research.—(Maxfield and Harrison). (*Journ. Amer. Inst. Elect. Engineers*, July, 1926, pp. 676-679.)

Discussion of the paper that was published in *Journ. A.I.E.E.* for March, 1926.

R545.—Feeding the Antenna.—R. Kruse. (*Q.S.T.*, July, 1926, pp. 8-14.)

R545.—Progress and Plans at Five Meters—and Below.—R. Kruse. (*Q.S.T.*, July, 1926, pp. 34-37.)

R550.—Irish Free State—New Stations. (*Electrical Review*, 9th July, 1926, p. 104.)

The Minister of Posts and Telegraphs has announced that the Government proposes to build a high-power station in the Midlands of the Free State, and three smaller stations at Cork, Galway and Bundivar, County Donegal. Thus, with the Dublin station, there will be five stations in the 26 counties. It is estimated that the four new stations will cost £29,000, that the smaller ones will be completed during the next 12 months, and the high-power station within two years.

R570.—Sur un Nouveau Moteur Synchrone à Induction Demarrant Automatiquement, et pouvant être actionné par Ondes Hertziennes Modulées en vue de Résoudre les Problèmes de Téléindication et de Télévision (On a new synchronous induction motor starting automatically, capable of being set in motion by modulated Hertzian waves, for solving problems in connection with signal transmission and television.)—J. L. Rontin. (*Comptes Rendus*, May 17th, 1926, pp. 1207—1209.)

The motor is shown diagrammatically in the figure, where A is a source of alternating current of frequency f; B is a rotating interrupter worked at a speed of N turns per sec. (N being a submultiple of f), adjusted so that the duration of the emissions is equal to that of the interruptions; C is a first inductor supplied by A each time that B is closed; D is a second inductor, out of phase with A, connected up in parallel with A through the condenser E; F is a metal disc mounted on the shaft G; the disc F is cut so as to have n teeth separated by n notches of equal width (in the figure $n=2$).

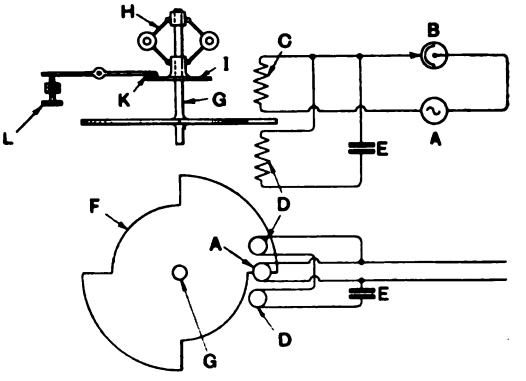

R594.—L'Organisation Radiophonique en Allemagne. (*Radio Revue*, July, 1926, p. 107.)

A short note on wireless telephony stations, working or imminent, in Germany, and on maritime radio telephony.

R600.—STATIONS : DESIGN, OPERATION, AND MANAGEMENT.

R611.—Radio-Telegraphy in Brazil. (*Electrical Review*, 16th July, 1926, p. 93.)

A brief account of the new high-power station recently opened at Rio de Janeiro, for communication between Brazil and other South American countries, as well as with the North American Continent, Australia, South Africa, and the countries of Europe. The equipment includes a 20,000-metre-ampere valve transmitter, an aerial carried by 800 ft. high steel masts, and an earth-screen supported by short masts.

Digitized by Google

R612.—TRANSMISSION EN ONDES COURTES (Short wave transmission).—H. Chireix. (*L'Onde Electrique*, June, 1926, pp. 237—262.)

A paper presented at a meeting of La Société des Amis de la T.S.F., April 21st, 1926.)

Among short-wave commercial communications mention is made of: Issy-les-Moulineaux—Djibonti, Sainte-Assise—Buenos Ayres, Nauen—Buenos Ayres, and New York—Buenos Ayres. The chief technical problems to be solved in the production of transmitters of considerable power are the following:—

1. The development of oscillating valves able to resist the high tensions and intense high-frequency currents passing through them.

2. The elimination of alien capacities and the reduction of losses by suitable circuit arrangements, with a view to increasing the frequency emitted and securing good efficiency for the installation.

3. Obtaining as stable a frequency as possible so as to profit to the fullest extent by the phenomena of resonance and to permit heterodyne reception.

These questions are discussed here in detail, together with the solutions that have been adopted by La Société Française Radio-electrique, particularly as concerns the attainment of stable frequency.

Lastly, considerable attention is directed to antennæ that are specially suitable for short waves.

R612.—UNDER 50 METRES. (*Scientific American*, July, 1926, p. 68.)

A list of the world's stations (50) operating on waves of less than 50 metres.

R616.—WIRELESS AND POLAR EXPLORATION.—(*Electrician*, 9th July, 1926, pp. 43-44.)

Details are given of the equipment on the airship *Norge I.*, including the direction-finding system.

R300.—NON-RADIO SUBJECTS.

538.—THE GENERATION OF VERY INTENSE MAGNETIC FIELDS.—Dr. Wall. (*Journ. Inst. Elect. Engineers*, July, 1926, pp. 745-757.)

A method for generating magnetic fields of the order of magnitude of one million gauss is described, also the means used to measure the value and frequency of the heavy transient currents producing these fields.

538.—THE LOSS OF ENERGY IN METAL PLATES OF FINITE THICKNESS, DUE TO EDDY CURRENTS PRODUCED BY ALTERNATING MAGNETIC FIELDS.—Dr. Marchant and J. Miller. (*Roy. Soc. Proc. A*, July, 1926, pp. 604-614.)

539.—ZUR THEORIE DES THERMIONENEFFEKTES, I.—N. v. Raschevsky. (*Zeitschrift für Physik*, 36, 8, pp. 628-637.)

539.1.—THE MECHANICS OF THE ELECTRIC FIELD.—Sir J. J. Thomson. (*Journ. Inst. Elect. Engineers*, July, 1926, pp. 721-726.)

The seventeenth Kelvin lecture. The lecturer puts forward considerations which suggest that electrons and protons are not the ultimate constituents of matter, but are capable of further sub-division.

Esperanto Section.

Abstracts of the Technical Articles in our last Issue.

Esperanto-Sekcio.

Resumoj de la Teknikaj Artikoloj en nia lasta Numero.

R000.—RADIO ĜENERALE.

R050.—RESUMOJ KAJ ALUDOJ.

Kompilita de la *Radio Research Board* (Radio-Esplorada Komitato), kaj publikigita laŭ aranĝo kun la Brita Registara Fako de Scienca kaj Industria Esplorado.

R100.—ĜENERALAJ PRINCIPOJ KAJ TEORIO.

R131.—UZADO DE PLAT-KURENTAJ—PLAT-TENSIAJ KARAKTERIZOJ DUM STUDADO PRI LA FUNKCIADO DE VALVAJ CIRKVITOJ.—E. Green.

Daŭrigo de artikolo el la antaŭa numero, pritraktanta la uzadon de anodkurentaj—anodvoltaj karakterizoj ĉe amplifaj cirkvitoj. Unue pritraktitaj estas rezistance kuplitaj amplifikatoroj, poste agorditaj anodaj kaj transformatore kuplitaj amplifikatoroj. La apliko de ĉi tiuj kurvoj al oscilaj cirkvitoj kaj al grandpotencaj amplifikatoroj estas poste konsiderita, kaj sekve ilia uzado en la problemo de sendistorda grandpotenca amplifado. Apartaj ekzemploj estas cititaj, unue pri la valvo LS5, poste pri la valvo LS5A, kaj fine pri grandpotenca amplifikatoro por la modula amplifado de telefona sendilo, ekz., 6-Kilovata Brodkasta sendilo uzanta ŝokbobenan reguligadon.

Aldonita noto pritraktas la metodon ricevi la Ip—Ep karakterizojn el grupo de la plikutimaj Ip—Eg karakterizoj (kiel tiuj ordinare donitaj de la fabrikistoj).

R144.—EFEKTIVA REZISTECO DE INDUKTANCAJ BOBENOJ JE RADIO-FREKVENCO.—PARTO 1Va.—S. Butterworth.

La daŭrigo de artikoloj el antaŭaj numeroj (resumitaj en ĉi tiu Sekcio en la Aŭgusta numero.)

Digitized by Google

La nombro da turnoj en bobeno estas diskutita, kaj la decido pri la plej taŭga fadena diametro, por kiu celo estas presita kurvo. La apliko de teorio estas ilustrita aparte pri desegno de 2,000μH bobeno (t.e., por agordo de proksimume 1,600 metroj).

Poste sekcio pritraktas la uzadon de dividitaj fadenoj. Oni citas esprimojn por la efektiva rezisteco de dividitaj konduktoroj, kaj tabelo montras komparojn pri la provado de formuloj kun observado. Poste diskutita estas la desegno de bobeno el dividita fadeno, kaj aparta ekzemplo donita. Oni komparas solidan kaj dividita-fadenan bobenojn, la komparo estante esprimita laŭ terminoj de " pligrandigo " jam sugestita de la aŭtoro kiel specifo de bobena funkciado. Aldono diskutas la kalkuladon de la meza elektra kampo super la vinda parto de induktancaj bobenoj.

R200.—MEZUROJ KAJ NORMOJ.

R230.—Anstataŭaĵoj.—G. H. Watson.

La artikolo priskribas metodon fari mezuron (de ferkerna induktanco) laŭ neordinara maniero per utiligo de disponeblaj instrumentoj. La cirkvito estis energiita pere de transformatoro, kies primaria kurento kaj sekundaria tensio estis mezuritaj per disponeblaj instrumentoj. La kurento tra la prova cirkvito povus esti kalkulita kaj ĝia indukteco ricevita laŭ la impedanco.

R300.—APARATO KAJ EKIPAĴO.

R343.—Problemoj Pri Desegnado de Brodkastaj Riceviloj.—Lekcio farita de S-ro. P. P. Eckersley, Ĉef-Inĝeniero de la Brita Brodkasta Kompanio, antaŭ la Radio-Societo de Granda Britujo, je la 26a Majo, 1926a.

La lekcianto unue diskutis aparatojn por la ricevado de longdistanca brodkastado, sub la rubrikoj Neŭtrodinaj kaj Supersonaj. Koncerne ĉi tiun lastan, metodo estas montrita por apliki la batantan osciladon post neŭtraligita altfrekvenca ŝtupo, por ke ĝi estu neradianta.

Poste li pritraktis ricevilojn por la loka stacio, diskutante unue rektifadon, kun speciala aludo al la produkto de distordo. Traktante amplifadon, oni montris cirkviton por uzi kristalan rektifikatoron kun unu neŭtraligita altfrekvenca ŝtupo, kaj sekvita de malaltfrekvencaj ŝtupoj, dum alia interesa cirkvito estis montrita por minimumigi la altfrekvencajn reakciojn, kiuj ofte okazas kiam rezistanca kapacita kuplo estas uzita por altfrekvenca amplifado. Fine la lekcianto montris kompletan ricevilon enkorpigantan ĉi tiujn kaj aliajn apartajn sugestojn pritraktitajn en la lekcio.

Raporto pri la diskutado, kiu sekvis la lekcion, estas ankaŭ presita.

R384.—Ondometro por Mallongaj Ondoj.—A. E. Tubbs.

Priskribo pri ondometro uzanta la cirkviton " Colpitts." La instrumento estas uzebla por skalo de 15 ĝis 80 metroj, kaj la priskribo estas ĝenerala, por ebligi al konstruantoj utiligi disponeblajn konstruerojn. La skrenaj metodoj uzitaj de l'aŭtoro estas priskribitaj, kaj estas ankaŭ noto pri la metodo normigi la ondometron.

R500.—APLIKOJ KAJ UZOJ.

R545.1.—" DX " Sendado per Riceva Valvo.—A. D. Gay.

Raportoj pri la spertoj de l'aŭtoro je uzado de ricevaj valvoj ĉe malgranda ricevilo, kun kelkaj ĝeneralaj notoj pri DX (longdistanca) sendado.

R800.—NE-RADIAJ TEMOJ.

621.355.01.—Nova Teorio pri la Plumba Akumulatoro.—Prof. G. W. O. Howe.

Post komentado pri la nesufiĉeco de la malplinova teorio pri la kemia efiko de akumulatoroj, raporto sekvas pri nova teorio evoluigita de S-roj. Fery kaj Cheveneau. La ĉefa punkto interesa estas, ke la plene ŝargita pozitiva plato ne estas plumba dioksido (PbO_2), sed plialta oksido (Pb_2O_5). La agoj necesigitaj en la nova teorio estas priskribitaj, kaj eksperimentaj rezultoj estas cititaj por subteni ĝin. La apliko de la teorio al sulfado kondukis al desegno de malgranda pilo nesulfadebla.

510.—Matematikoj por Senfadenaj Amatoroj.—F. M. Colebrook.

Daŭrigo de la serio el antaŭaj numeroj. La nuna numero traktas pri Divido en Algebro, enhavante la Negativan Signon en Divido, diversajn farojn per Frakcioj, Dividon de Nulo, kaj noton pri la ĝeneralaj konkludoj de la fundamentaj reguloj pri Algebro jam pritraktitaj.

Digitized by Google

Correspondence.

Letters of interest to experimenters are always welcome. In publishing such communications the Editors do not necessarily endorse any technical or general statements which they may contain.

j, the Heaviside Operator, and $\sqrt{-1}$.

To the Editor, E.W.& W.E.

SIR,—Since it is admitted that D is an operator to which the usual laws of algebra do not apply, the point of your comment on my last letter does not seem very clear. The correct method of obtaining the equation $D^2 = -\omega^2$ is, as pointed out by Mr. Riley and myself, by a repetition of the operator. Although, as you observe, it can also be obtained by algebraical multiplication, this derivation cannot be regarded as legitimate. Indeed, had the order of one of the equations been reversed, an inconsistent result would have been obtained by the same process.

The correspondence has brought out the "operational" character of D and of $j\omega$ when used in place of D, for to j also, when used in this "operational" sense, the laws of algebra do not apply. But as j is used algebraically for $\sqrt{-1}$, the precise meaning of this symbol in any instance is not clear, while its mode of treatment is also in doubt. Using D for the operator, no trouble need arise.

The confusion caused by an illegitimate use of D is, in my view, already created by the dual use of j for both vectorial operator and $\sqrt{-1}$. This dualism, as you, Sir, acknowledge, has been in the past a stumbling block to many wise men; is it fair to our students to let it continue?

Murtle, W. A. BARCLAY.
Aberdeenshire.

A New Theory.

To the Editor, E.W.& W.E.

SIR,—The interesting experiments described by Mr. Derek Shannon in the current issue of *E.W.& W.E.* seem to prove beyond doubt that the moon has an effect upon the propagation of radio waves, but the explanation suggested by him does not appear to be feasible. The gravitational deflexion of a ray of light grazing the sun's surface is only of the order of 1 second of arc, so that the effect of a much smaller body such as the moon at a distance of a quarter of a million miles, could not possibly be appreciable.

It seems far more probable that the sun and moon set up tidal motions in the atmosphere, which change the disposition of the Heaviside layer. Professor Balfour Stewart, and more recently Professor Chapman, have used such a theory to explain the diurnal variations in the earth's magnetic field. There is also some barometric evidence of the existence of such atmospheric tides.

In any case, it is highly desirable to obtain further observations, at different distances and on different wavelengths, and it is to be hoped that those who have the necessary facilities will give some attention to this problem.

Reading. N. L. YATES-FISH (G5CA).

Effective Resistance of Inductance Coils at Radio Frequency.

To the Editor, E.W.& W.E.

SIR,—In Part III. of Mr. Butterworth's paper on the effective resistance of coils, which appeared in the June number of the *E.W.& W.E.*, reference was made to a factor K which was used by Professor Fortescue in his paper (*J.I.E.E.*, Vol. 61, p. 933, 1923).

Mr. Butterworth obtained values by his method, which were very appreciably different to those of Professor Fortescue.

The factor K^2 represents the average of the square of the magnetic field at the wires of the coils. Professor Fortescue calculated the value of K by dividing the coil into sections, working out the value of the square of the magnetic field due to the rest of the coil at the centre of each section and taking the mean of the values for all the sections. Obviously the method represents a great deal of heavy arithmetic, especially as the accuracy depends very greatly on the number of sections taken.

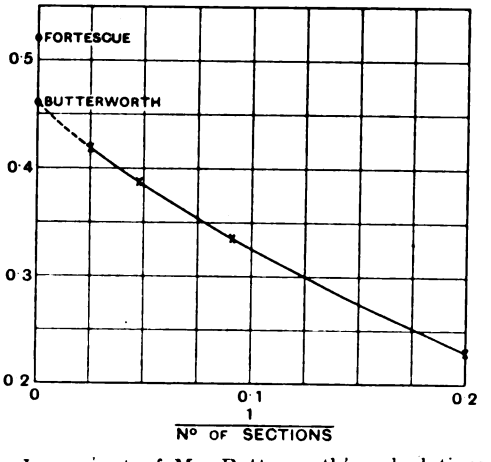

In support of Mr. Butterworth's calculations I would like to give some results I obtained in calculating the value of K. I started this work to check Professor Fortescue's values but gave it up when Mr. Butterworth kindly made me acquainted with his work.

I took a single layer coil having a length equal to its diameter, calculated the value K obtained by dividing the coil into various numbers of sections. The results are given in the following table:—

No. of Sections.	5	11	21	41
K	0.231	0.336	0.39	0.42

Digitized by Google

I have plotted this value of K against the reciprocal of the number of sections as shown in the accompanying figure.

The value obtained by Mr. Butterworth, who considers an infinite number of sections, is 0.460,* and by Professor Fortescue is 0.52. If these two points are added to the curve it will be seen that Mr. Butterworth's result shows no discontinuity with the curve I calculated, while Professor Fortescue's does.

Thus the two methods of computing K are in agreement, but Professor Fortescue probably made an error in the special case I considered. It would not be fair to suggest from this isolated case that all Professor Fortescue's values of K were incorrect, but greater reliance can probably be placed on Mr. Butterworth's results whose method for calculating K represents much less arithmetic and consequently fewer opportunities for errors of computation.

National Physical Laboratory.

RAYMOND M. WILMOTTE.

[If six sections are taken—a very likely number—the value obtained is 0.26, which is exactly half the 0.52 which is given as the value actually found by Prof. Fortescue. This strongly suggests that a 2 has been overlooked somewhere.—ED.]

Fading and Mountains.

To the Editor, E.W. & W.E.

SIR,—The following facts may be of use to experimenters studying this subject. They refer to the broadcast waves (250-550) and no striking seasonal variations are recorded.

In sketch, 1 is Santiago de Chile, 2 Los Andes Chile, 3 Puente del Inca just across the boundary in Argentina, 4 Mendoza, 5 Buenos Aires.

At 1, 4 is received with strong fading and 5 with nominal fading, or often with slight. At 2, 1 is received without fading, 4 with strong fading, and 5 with normal or strong fading. At 3, the fading of 1 is incredibly strong (from absolute inaudibility in loud-speaker to unpleasant volume in same, within two minutes, and practically continuous): 4 is received with little fading, and 5 with average to heavy fading. At 4 (incidentally one of the worst places for atmospherics that I have ever found), 1 is received with heavy fading, 5 with slight. At 5, 1 is received with fair fading, 4 with slight. All the above are from personal experience.

At a point about half-way between 3 and 4, 1 is received with very strong gfadin, though not as bad as at 3, 4 with practically no fading, 5 with slight to fair: at a point about half-way between 4 and 5, 1, 4 and 5 are all received with fair fading. These are from information given me by other amateurs.

R. RAVEN-HART.

Caletta, Livozno, Italy.

---

* *Phil. Trans. A.*, Vol. 222, p. 59, 1921.

To the Editor, E.W. & W.E.

SIR,—Mr. A. Woodmansey states that the resistance of a cloud would be very high on account of its non-homogeneous character. May I point out that the resistance he considers is to direct current and not high frequency alternating currents with which we are here concerned.

Compared with an ion a water particle in a cloud is large, and it is quite conceivable for conduction to occur from one side to the other of the globule. Under the action of alternating potentials the conduction would be periodically reversed. Ionic movement in liquids is comparatively slow, and in many cases would never reach the other side, but would return to their original position in phase with the inducing potential. The only result is an ether strain of the driving frequency with consequent emission of radio waves. Thus an effect of reflection is obtained and Mr. Woodmansey's argument is futile The case he quotes is not parallel, and the homogeneity of the cloud makes little difference.

In addition I have conceived a further possible cloud action. All clouds normally possess an electric charge. (A positive charge is obtained in the process of vaporisation). When two equal spheres combine the radius of the new sphere is only 26 per cent. more than that of each original sphere. Now the capacity of a sphere is proportional to the radius. Therefore when two equal charged spheres combine there is an excess of charge of 37 per cent. In consequence the potential rises. The only limiting factor of this rise in pressure is the rate at which the charge will leak owing to the ionisation of the surrounding gas. Such leakages may be the cause of atmospherics. The air around the cloud will be very highly ionised as the area of this cloud is small compared with the total area of bodies of different potential, such as the earth and other clouds, forming the opposite electrode. The extent of this ionisation can rise far higher than in the Heaviside layer for this reason. In a cloud the potential forces ionisation until the surrounding air becomes an almost indefinitely good conductor with a limit provided only by the leakage rate of the charge. On the other hand, the Heaviside layer is only ionised by electronic bombardment from the sun. These electrons are driven off from their source by the light pressure and will continue to move away from the sun until a force in opposition forms an equilibrium. These electrons rapidly come to rest in the earth's atmosphere ionising the air in doing so. An excess of electrons always exists here and a high negative potential results. This introduces an opposing force to the light pressure and further electrons are deflected forming the zodiacal light according to accepted theory. Thus it is seen that the limit of ionisation is provided by the light-pressure of the sun.

Dr. Eccles has observed results similar to those reported by Mr. H. Piraux and attributed this to refraction. (See *Journal, R.S.G.B.*, March, and *E.W. & W.E.*, May.)

I regret that I have no tabulated data, all my previous observations being quite casual though perfectly definite. I propose, however, in the forthcoming winter to make a complete record.

Digitized by Google

Further, I propose, with assistance, to attempt to reflect waves of the order of 5 metres from clouds. This will present many practical difficulties, first and foremost being the P.M.G.

I appeal to all observers, especially those with barometric records, to look through them and anything in support or direct opposition to this theory will they please report them, as I feel sure that many of the mysteries of variable reception will be interpreted thereby.

N.16. W. H. MADDISON (2BOX).

Makeshifts.

To the Editor, E.W. & W.E.

SIR,—Having recently made numerous A.C. measurements of coils of the type referred to by Mr. H. G. Watson in the August issue, I was interested to read of the method employed by him. I was rather surprised, however, that he did not turn his good fortune in possessing an electrostatic voltmeter to better profit by eliminating his rather doubtful assumptions regarding the current ratio of the transformer.

It is extremely unlikely that a small high ratio transformer would have an efficiency so near 100 per cent. as to justify neglecting the difference. It was mentioned that the no-load current was not readable on a 2 amp instrument, but owing to the cramped scale usual with A.C. meters, such a current might easily be a very appreciable fraction of 0.75 amp, and in this case, owing to the highly reactive load, would be nearly in phase with the load current.

A sounder method is to put a known non-reactive resistance in series with the coil, and to measure the voltage across each in turn with an electrostatic or other non-disturbing voltmeter. It is comparatively easy to get a reasonably non-reactive resistance at 50 cycles. The current may then be known accurately.

It was only by using this method that I was able to avoid a much more serious error than that referred to above. Mr. Watson calculates the inductance from a knowledge of the impedance and the D.C. resistance in the usual manner. Unfortunately, for coils of this type, the results obtained thus are quite erroneous. In order to get a check on calculation I measured the voltage across coil and resistance in series in addition to each separately. It is then quite a simple matter to obtain the phase angle as well as the magnitude of the voltage across the coil, and hence the inductance and *effective A.C. resistance*. The latter was in some cases enormously greater than the D.C. resistance, as much as 20 times as great, depending on the A.C. current passing, on superimposed D.C., if any, and on the past history of the iron (*e.g.*, previous passage of several milliamps of D.C. through the coil).

This result was so surprising at first sight that measurements were repeated using a different method of voltage measurement and very elaborate precautions against error. The results were substantially the same, and were afterwards verified in other ways.

In passing, it may be mentioned that the inductance of such a coil shows wide variations quite apart from the well-known saturation effect, and the value obtained depends upon a large number of variables, some of which cannot be specified with any degree of certainty.

The measurement of iron-core coils is beset with many pitfalls, and the results when obtained are practically valueless unless the full circumstances are also indicated, which is a matter of more difficulty than appears at first sight.

S.E.12. MARCUS G. SCROGGIE.

Inductance Coils Quantitatively Compared.

To the Editor, E.W. & W.E.

SIR,—I have to thank Mr. A. L. M. Sowerby for the very full rejoinder he has made in your issue of August to my criticism in that of July. But his rejoinder has still not convinced me.

He claims that my suggested procedure has the failing of which I accused him—the simultaneous change of several variables. Well, that resolves itself into the definition of "variable" for the present argument. If, for example, diameter of wire and spacing between turns are regarded as two separate variables, then his test given in Table II., p. 365, June issue, is conducted on right lines, and I am wrong. (It will be remembered that he wound a series of coils, all of one gauge, but with increasing spacing.) If, on the other hand, the ratio d/c (where d is wire diameter and c the spacing between centres of neighbouring turns) is regarded as one variable, then my procedure (July, p. 462) is reasonable and his is not.

I based my suggestion on the fact that the whole theory of eddy current losses due to proximity of wires is based on the ration d/c, considered as one variable.

My anxiety as to the accuracy of his method of test seems to be justified from the research point of view, though perhaps not from the purely practical standpoint. He gives a difference of .1 ohm as "certainly unnoticed," and .5 ohm as certainly noticeable in his tests.

Now the inductance of all his coils is in the neighbourhood of 250μH, and the tests were carried out at about 380 metres. The reactance of the coils is, therefore, about 1,250 ohms. The power factor of a reasonably good coil of the type indicated should most certainly not exceed .005, so that their resistance should be in the neighbourhood of 6 ohms. Putting .25 ohm as his limit of observation, we have an accuracy of 4 per cent.

Certainly I am pleased to admit that his method has given very fair practical accuracy—in my previous letter I described it as "open to question," and the question has been answered. But I am still of the opinion that his selection and arrangement of coils is such that his tabulated results are not of as much use as they might have been.

Detailed reasons for this would occupy too much space. If Mr. Sowerby would care to meet me to discuss the matter verbally, with a view to concluding this correspondence by a joint final letter, I should be delighted to do so.

Blackheath. P. K. TURNER.

Digitized by Google

Some Recent Patents. [R008

The following abstracts are prepared, with the permission of the Controller of H. M. Stationery Office, from Specifications obtainable at the Patent Office, 25, Southampton Buildings, London, W.C.2, price 1/- each.

AN INTERESTING FRAME AERIAL.

(*Application date, 7th April*, 1925. No. 254,036.)

A very interesting frame aerial circuit particularly suitable for use with superheterodyne receivers is described by P. W. Willans in the above British Patent. Interference is frequently experienced when using superheterodyne receivers owing to the intermediate amplifier becoming directly energised by long wave signals. It is found that the presence of an inductance of appreciable area connected between the grid and filament of the first valve causes sufficient potential to be set up across it from longer wave stations to energise the intermediate amplifier, thereby causing interference. This difficulty is overcome according to this invention by so arranging the aerial that it is substantially non-inductive at intermediate frequencies. The accompanying illustration should make the invention quite clear, in which a valve *V* has connected between the grid and filament a frame aerial consisting of two portions *A* and *B*. The two windings *A* and *B* are electrically equal, and are arranged so that they are coupled together and are wound in opposite directions. Neglecting the presence of the variable condenser *C* it will be obvious that since the two halves of the aerial are in opposition, the voltage existing between the

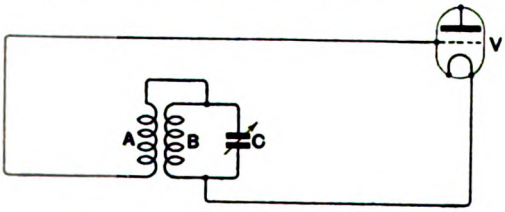

grid and the filament, that is across the ends of the complete frame, will be substantially zero since the whole arrangement is non-inductive. One portion of the aerial *B*, however, is tuned by a variable condenser *C*, and thus the potential difference existing across the ends of the halves *A* and *B* respectively will be different. In other words, tuning the section *B* will cause a potential difference to be communicated to the grid and filament, thereby causing the valve to become operative. The section *B* is tuned to the desired frequency of reception by means of the condenser, and thus the valve will respond to signals at the desired frequency, while potential differences set up by longer wave wave stations will cause no interference effect.

AN EDDY CURRENT LOUD-SPEAKER.

(*Convention date* (*U.S.A.*), *21st April*, 1924. *No.* 232,600.)

A very novel form of loud-speaker functioning by virtue of eddy currents is described by the Westinghouse Electric and Manufacturing Company, and J. Slepian in the above British Patent. The invention can best be understood by reference to accompanying illustration, which represents one form of the acoustic reproducer, or loud-speaker, connected to a source of energisation. The energisation source comprises a battery *B* connected to a microphone *M* through a choke *L*. In shunt with the battery and choke is a coil *C* having an appreciable area. Upon the coil is supported a membrane or diaphragm *D* consisting of a flat sheet of foil, such as gold leaf, or gold leaf reinforced with cardboard, or other sheet material cemented to it. The battery *B* will cause a steady current flowing through the windings of the coil *C*, thereby setting up a magnetic field. Sound waves impinging upon

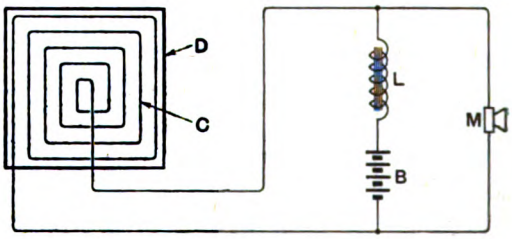

the diaphragm of the microphone will cause its resistance to alter, thereby causing an alteration of current flowing through it, this alteration being proportional to the sound waves. Since the microphone circuit contains a choke *L*, potential variations will be set up across it, thereby producing a change in current flowing through the windings *C*. Fluctuating currents in the winding *C* will thereby cause a variation in eddy currents and the foil diaphragm will be alternately attracted and repelled by opposite half cycles of the microphone currents. In other words, the diaphragm will vibrate in sympathy with the microphone currents, thereby obtaining an ordinary loud-speaker effect.

AN IMPULSE EXCITATION GENERATOR.

(*Convention date* (*Germany*), *25th, July* 1924. *No.* 237,585.)

The Telefunken Gesellschaft für Drahtlose Telegraphie M.B.H. describe in the above British Patent a method of generating very short waves by means of impulse excitation, in which a thermionic valve is used as an interruptor. Thus in the accompanying illustration it will be seen that a circuit *LC* is tuned to the desired frequency of generation, and supplied through a source *S*. In series with the source of power is a valve *V*, the grid potential of which is controlled at *XY* from a source of high frequency current. The frequency of the exciting current is an integral fraction of the circuit *LC*, such as a half, a third, or a quarter. In addition, the voltage or current curve of the exciting valve is so arranged that the time during which the interruptor valve is conductive only lasts until the

Digitized by Google

high frequency circuit has passed a quarter of its oscillation phase; the exciting voltage must therefore rise rapidly, and then retain for a short time its maximum value, and finally remain quite low for at least three times as long. The working circuit thus receives the charging impulse during the first quarter of its oscillation phase, and oscillates for

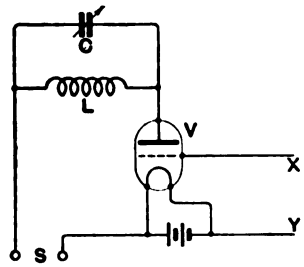

the remaining part of its period without supply of energy. The specification states that various means may be employed for obtaining the asymmetry of the control current, and mentions the use of coils containing iron which may be employed with or without auxiliary magnetisation.

A SUPER-REGENERATIVE CIRCUIT.

(*Application date*, 10*th March*, 1925. *No.* 253,192.)

A super-regenerative circuit is described by C. Seymour, D.S.O. and J. C. W. Drabble in the above British Patent. The advantage of the receiver, according to the invention, is the simplicity of control, which utilises one tuning adjustment, and one variation of the quenching frequency strength. The invention will be clearly understood by reference to the accompanying illustration. The aerial

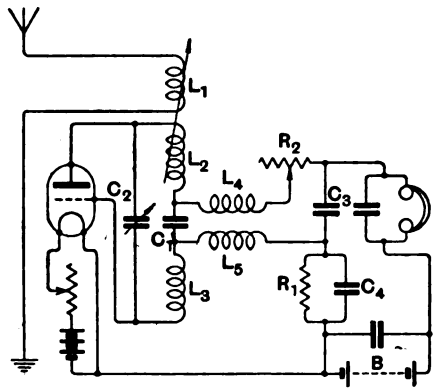

circuit contains an inductance L_1, tightly coupled to a split inductance L_2 L_3, tuned by a variable condenser C_2, the split inductance being connected by a fixed condenser C_1. Inductance L_4 and L_5 constituting the inductance of the quenching circuit, are associated with a condenser C_3. The lower end of the grid circuit contains a resistance R_1 shunted by a blocking condenser C_4, telephones T and H.T. battery B being shunted by the usual condensers. The anode circuit, in addition to containing half the split inductance L_2, and one of the quenching inductances L_4, contains a variable resistance R_2. The specification gives alternate considerations of the principle by means of which the invention functions. It has been mentioned that the chief feature of the invention is the simplicity of control. The variable condenser C_2 is simply used to tune the receiver to the desired frequency, and the strength of the quenching oscillations, which is a critical factor in a super-regenerative circuit, is controlled by a variable resistance R_1, which, of course, varies the anode potential.

HETERODYNE RECEPTION.

(*Convention date* (*U.S.A.*), 20*th November*, 1924. *No.* 243,371.)

Marconi's Wireless Telegraph Company, Limited, A. N. Goldsmith, and A. F. van Dyck, describe in the above British Patent a system of heterodyne

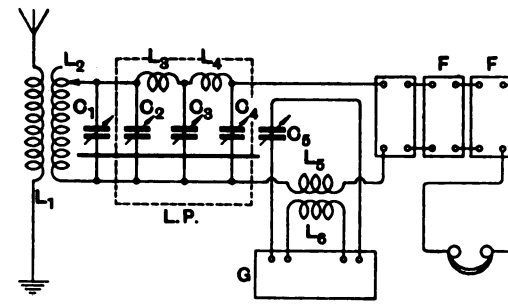

reception employing a low pass filter. The specification mentions that with ordinary heterodyne reception it is possible to obtain more than one adjustment of the local oscillator for any desired beat note, thereby resulting in confusion.

Again, one particular adjustment of the local oscillator results in the production of the desired beat frequency not only from desired signals, but from undesired signals as well, thereby introducing interference. Essentially, the invention consists in providing a low pass filter through which the received signals are passed before the local oscillations are super-imposed, so that beat frequencies can be obtained only with the desired signals. Several modifications of the invention are described, and one is shown in the accompanying illustration. Thus, in the accompanying illustration, the aerial circuit comprises an inductance L_1 coupled to an inductance L_2 tuned by a variable condenser C_1. The tuned circuit L_2 C_1, tuned to the desired frequency of reception, is connected to a low pass filter LP, comprising variable condensers C_2, C_3, C_4, and inductances L_3 and L_4. A local oscillator G is coupled by inductances L_5 and L_6, the frequency being varied by the variable condenser

Digitized by Google

C_5. Further selectivity in this particular case is obtained by the introduction of two audio-frequency filters for the desired beat, which are shown, and F and F.

A VALVE GENERATOR CIRCUIT.

(*Application date, 18th April,* 1925. *No.* 254,424.)

A valve generator circuit is described in the above British Patent by C. R. Burch, N. R. Davis and Metropolitan-Vickers Electrical Company, Limited, of the shunt supply type, that is, in which the valve is fed through a choke. Referring to the accompanying illustration, which shows one modification of the invention, a valve V is provided with an oscillatory circuit L_1 C_1, connected through a stopping condenser C to the anode A in the normal manner. The valve is supplied from a generator G through an inductance L_2. The effective resistance of the circuit L_1 C_1, or any load coupled to it, is a minimum, that is, the loading on the valve V is a maximum when the circuit L_1 C_1 is connected directly to the anode. When connection of the circuit L_1 C_1 is made to a point, such as at X on the inductance L_2, the effective resistance of the circuit L_1 C_1 is increased, this increase being

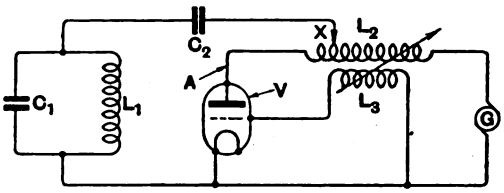

proportional to the number of turns of the inductance L_2 between the anode and the connection X. In other words, the choke or inductance L_2 functions in the manner of a step-down auto-transformer. In order that the system shall generate oscillations an inductance L_3 is connected between the grid and filament of the valve, and is coupled to the inductance L_2. The specification is fairly detailed and contains several modifications of the scheme.

SUPPRESSING PARASITIC OSCILLATIONS.

(*Application date, 28th May,* 1925. *No.* 254,472.)

An interesting circuit is described by The Western Electric Company, Limited, in the above British Patent, and deals with the suppression of oscillations in a valve amplifier. The invention relates to a circuit of the balanced or neutralised type, and particularly to a modification containing a number of stages of amplification, and also to one containing valves of high magnification. The accompanying illustration shows one modification, and will no doubt be familiar to readers. The arrangement consists of an inductance L_1 tuned by a variable condenser C_1, the mid point of the inductance being connected to the filament, one end to the grid of the valve, and the other end through a balancing capacity C_2 to the anode. The anode circuit contains an inductance L_2, which is used to pass on the output of this valve to the next. The balancing capacity C_2 is substantially equal to the capacity existing between the grid and the filament, which may be considered as C_3, and is shown dotted. This portion of the circuit is perfectly normal. The capacity C_3, representing the inter-electrode capacity of the valve, actually provides a path from the anode to the grid, which permits the

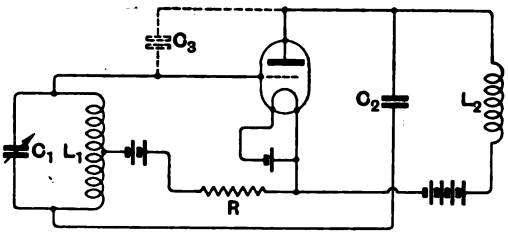

transference of waves from the output to the anode circuit, and may produce undesirable oscillations. In order to neutralise this effect a capacity C_2 is connected as indicated, and is actually in parallel with the inter-electrode valve capacity. Varying currents therefore flow through two parallel paths, through the respective halves of the inductance L_1, with the result that substantially no potential variations are imposed upon the grid of the valve. The invention states that in practice, however, it has been found that the balancing capacity C_2 in parallel with the electrode capacity C_3 provides new paths in which oscillations may be generated. It is stated that this is due to the fact that the input circuit of the valve contains an inductance represented by the difference between the self inductance of L_1 and the mutual inductance between its two halves, and also that the anode circuit contains an inductance L_2. It is well known that if inductances are contained in the anode and grid circuits of a valve, and there is no coupling between them, oscillations will be generated. Therefore, in order to prevent these oscillations a resistance R is inserted in the common filament lead, which tends to prevent the potentials reaching sufficient value to cause the valve to oscillate. We should imagine that this circuit would be of particular interest and value to amateurs who experience difficulty in stabilising multi-stage neutralised amplifiers.

AN INTERESTING NEUTRALISED CIRCUIT.

(*Application date, 7th April,* 1925. *No.* 253,277.)

An interesting form of neutralised circuit is described by P. W. Willans in the above British Patent, the specification of which contains details of several modifications, one being shown in the accompanying illustration. The invention really consists in the use of a transformer comprising two portions A and B, one winding being connected between the grid and the filament, and the other winding being connected in series with a condenser C, which, in turn, is connected to the anode of the valve. The anode circuit consists of an impedance L in the form of a radio-frequency choke, or the winding of a transformer. A further feature of the

Digitized by Google

invention is that the capacity C constitutes the major portion of the capacity in shunt to the inductance L. The figure also shows another modification in which a transformer of this type is used in the anode circuit. Here, one winding X

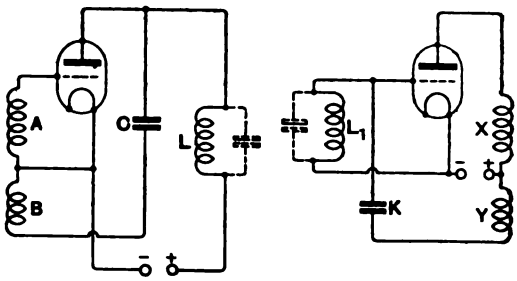

is connected directly between the anode and the H.T., and the other winding Y is connected to the grid through a capacity. Here, again, the capacity K forms the major portion of the capacity in shunt with an inductance L_1, connected, of course, this time in the grid circuit. This circuit should prove of interest to experimenters, and it is found to be very satisfactory in practice.

A TUNING SYSTEM.

(*Application date, 5th October*, 1925. *No.* 254,568.)

L. Bonnet describes in the above British Patent a method of tuning which consists in short-circuiting the magnetic field of an inductance. The short-circuiting device consists of two concentric tubes

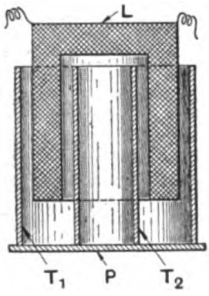

T_1 and T_2 joined by a plate P, the tubes and the plate preferably being of copper. The inductance L is arranged so that its windings are between the two tubes, and means are provided for varying the tubes in relation to the inductance. It is stated that the two tubes act in the manner of a Faraday cage.

A DOUBLE CONE.

(*Application date, 14th May*, 1925. *No.* 253,687.)

Another form of loud-speaker employing two cones is described by P. J. Mullaly in the above British Patent, and the form of construction should be quite clear by reference to the accompanying illustration. The loud-speaker is contained within a cabinet W provided with an open-work front O. Two cones A and B constitute the diaphragm, and are fixed at their peripheries to the front of the cabinet, as shown at X. The inner cone A has a more obtuse angle than the outer cone B, and the apices of the two cones are connected to a wooden

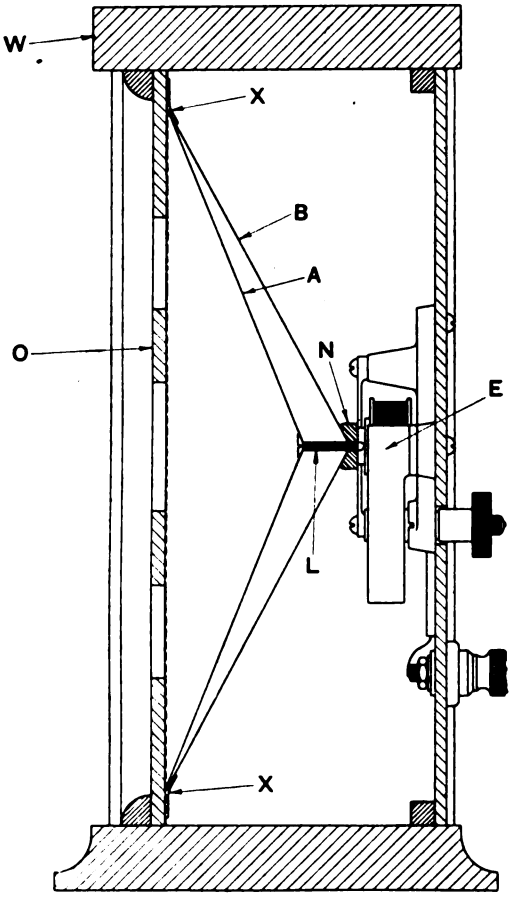

plug N to which they are joined by a screw L. This screw communicates with an ordinary electro-magnetic system E, such as a telephone receiver, which is used to energise the cones. It is stated that the cones may be made of paper, parchment, thin wood, or metallic foil.

A PIVOTED PANEL.

(*Application date, 29th May*, 1925. *No.* 253,348.)

Another system of set construction is described in the above British Patent by T. E. Haywood, T. A. E. Haywood, and A. Haywood, the object

Digitized by Google

of the invention again being to facilitate access to the components of the receiver. The invention will be clearly understood by reference to the accompanying illustration, in which it will be seen that the cabinet *C* is provided with a panel *P* carrying a bracket framework *B*, which supports the components of the receiver. The panel *P* is pivoted at its base at *X*, and is maintained normally

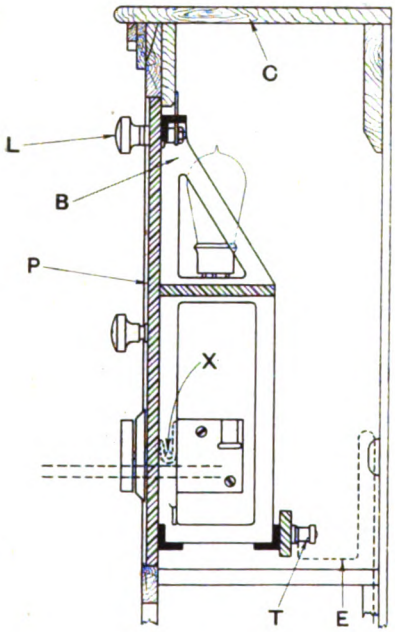

in position by means of a knob-operated lock *L*. Flexible leads *E* are provided between the back of the cabinet and the terminals *T* and the receiver proper. In order to expose the contents of the cabinet, it is merely necessary to rotate the knob operating the lock *L*, and tilt the front panel forward about the point *X*. The pivot is so arranged that, if desired, the whole front panel can be withdrawn.

VALVE CONSTRUCTION.

(*Application date, 26th November,* 1925. *No.* 253,426.)

Several types of valves have recently been devised in which the electrodes are duplicated, and are contained within one envelope. The accompanying illustration shows an arrangement of one which is claimed by W. Frudenthal and L. Kremner in the

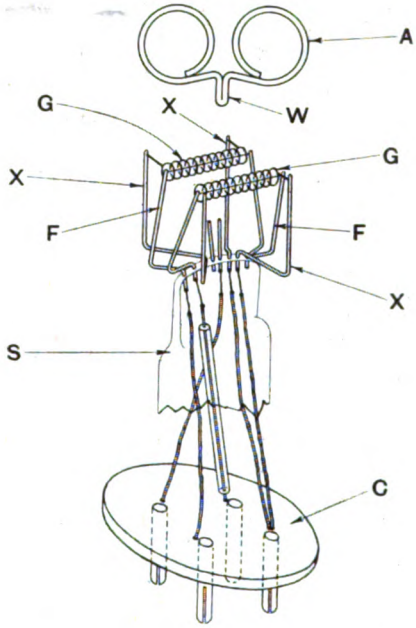

above British Patent. The anode *A* will be seen to be in the form of two cylinders, which are welded together at *W*, or fixed in any other convenient manner. Supports *X* carry two grids *G*, which are centrally disposed within the two anodes, the filaments *F*, of course, being arranged along the common axis of the two sets of grids and anodes. All the supports are sealed into a glass foot *S*, and the valve is provided with the usual four-pin cap *C*.

Digitized by Google

EXPERIMENTAL WIRELESS & The WIRELESS ENGINEER

VOL. III. OCTOBER, 1926. No. 37.

Editorial.

The B.E.S.A. Glossary of Terms used in Electrical Engineering.

ON page 612 of this issue will be found a brief review of this publication and particulars as to price, etc. In a paper read before the Engineering Section of the British Association at Oxford, on Wednesday, 11th August, we made a vigorous protest against the unmerited slur which the British Engineering Standards Association has cast upon the fellow countrymen of Faraday, Clerk-Maxwell and Kelvin by giving its authoritative imprimatur to the publication of such a collection of definitions as are to be found on pages 11 to 18 of this book, and we expressed the hope that the Association would take immediate steps to recall it and issue a note asking those who had purchased copies to delete these pages pending their revision. The outcome of this has been the appointment by the British Association of a committee to co-operate with the B.E.S.A. in the revision of the definitions. We cannot here go into the definitions seriatim* but we may indicate briefly the sort of confusion which exists among the definitions of even the most fundamental magnetic and electric terms. Electrostatic Flux is defined as "The number of unit electrostatic tubes of force traversing a given surface. The total flux over a surface enclosing a charge is equal to the charge." Here we have a hopeless confusion between two different things, viz., the electric force and the flux or displacement produced by the force. In a condenser, for example, if the P.D. is fixed, the electric force is fixed, but the flux or charge depends on the dielectric constant or permittivity of the medium. How then can the electrostatic *flux* be defined as the number of tubes of *force*? Exactly the same confusion occurs in the magnetic units, for Magnetic Flux is defined as the number of unit magnetic tubes of *force* traversing a given surface. The impossibility of this definition is obvious from the fact that when magnetic flux passes from iron to air the magnetic force undergoes an enormous change; in fact, another definition tells us that permeability is the ratio of the magnetic flux produced by a given magnetic force in the material or medium to the magnetic flux which would be produced by the same magnetic force in a perfect vacuum. How can the ratio change if *flux* is defined as the number of tubes of force? The reason for the muddle is to be found in the failure to distinguish between cause and effect, between the force and the resulting displacement, between the stress and the resulting strain.

There is another trouble, however, which is caused by a real difficulty, although to judge from the definitions, those who drew

*The paper was published in full in the *Electrician* of 20th August, and in *Engineering* of 20th August.

Digitized by Google

them up were not aware of the difficulty. The term "potential difference" is based on the potential theory, and is only strictly applicable to fields in which the work done in moving unit charge or pole from one point to the other is independent of the path followed. In such a field the work done in moving round any completely closed curve must be zero. Now when the magnetic flux through any closed curve is changing, the work done in moving unit charge around the curve is not zero, but is equal to the E.M.F. induced in the path. Strictly speaking, therefore, the potential theory is not applicable to alternating current circuits, but in the majority of practical cases it can be applied with little ambiguity. When one speaks of the P.D. between two transmission lines one assumes that the voltmeter wires by which it is measured ran approximately from one line to the other by the shortest path, and not via the power station and the stator slots. In radio-telegraphy and all high frequency work, one has to be very careful about the voltmeter leads when measuring the so-called P.D. between two points, although if the P.D. were equal to the work done in moving unit charge from one point to the other, irrespective of the path followed, such precautions would not be necessary. As an example of the confusion caused by the misapplication of the potential theory, we may choose an example which will appeal to our least mathematical reader. Electromotive Force is defined as "an electric condition tending to cause a movement of electricity in a circuit. It is measured by the sum of the potential differences from point to point round the circuit." One of the first things we do in teaching students the principles underlying electrical engineering is to try to get them to distinguish clearly between electromotive force and potential difference, but in this definition the two are mixed up together. If one makes a closed ring of copper wire and suddenly plunges the pole of a bar magnet into the centre of it, a current is produced around the ring because an E.M.F. is induced in it, but from considerations of symmetry every part of the ring is at the same potential; there is an E.M.F. but there are no potential differences. One cannot therefore define the E.M.F. as the sum of a lot of non-existent potential differences.

These few examples will serve as a warning to those readers who may turn to the Glossary for enlightenment on fundamental magnetic and electric terms. They may even serve a more useful purpose by causing many readers to look to their own foundations and see if they have clear conceptions of the meanings of these fundamental terms which occur on every page of electrical literature.

Digitized by Google

The Thermionic Voltmeter.

By W. B. Medlam, B.Sc., A.M.I.E.E., and U. A. Oschwald, B.A.

[R261

THE thermionic voltmeter has become a very powerful weapon in various H.F. measurements, and little information concerning the operating conditions of the various forms of the voltmeter appears to have been published since the introduction of the direct deflection voltmeter by E. B. Moullin.* The present paper gives the results of an experimental investigation of the performance of five different types of thermionic voltmeter from the points of view of :—

(*a*) Sensibility and range.
(*b*) Possible frequency error.
(*c*) Wave form error.
(*d*) Input load.
(*e*) Stability of calibration.

Type 1.—Deflection Type, Rectifying on Curvature of the Anode Characteristic.

The essential connections of this well-known type of voltmeter are given in Fig. 1. The rectified current through the microammeter *G* will vary with the A.C. voltage

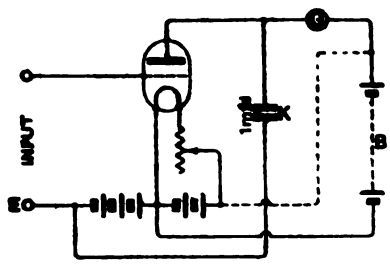

Fig. 1. *Connections of deflection voltmeter, Type I, rectifying on curvature of anode characteristic.*

applied across the input terminals, and the scale of the instrument may be calibrated to give a direct reading of the input voltage for given values of the filament current, steady bias voltage, and anode voltage due to the battery *B*.

* *I.E.E. Journ.*, Vol. 61.

The voltmeter will function without the anode battery *B* if the galvanometer lead is taken to L.T.+ as shown by the dotted connection, but a certain amount of extra anode voltage is a decided advantage as is shown later. The condenser *K* (of the order of 1μF) prevents losses due to H.F. currents flowing through the galvanometer and anode battery. It also steadies the reading of the instrument when the input voltage carries a varying modulation. To put the voltmeter into operation its input terminals are shorted, and the filament resistance is adjusted until the reading of *G* is a definite value, taken to be the zero of the voltage scale.

(*a*) *Sensibility and Range.*

The smallest voltage which can be read with this type of voltmeter depends upon the values of anode voltage and negative grid bias. The value of the latter is more or less definitely determined by the maximum voltage it is desired to measure on the voltmeter. In order to avoid grid current the bias should be about one volt greater than the peak value of this maximum voltage. Using this bias, the lowest voltage readable on a microammeter will be about two volts less than the maximum voltage. That is, the scale of the voltmeter covers a range of about two volts, commencing at any desired voltage that may be safely applied to the grid, say 100 volts or so. From this it will be seen that the sensibility decreases continuously as the negative bias is increased. This point is illustrated in Fig. 2 which shows a series of calibrations for values of the bias between —2 volts and —6 volts. For example, suppose the voltmeter is to measure up to 5 volts (peak value), the bias would be fixed at —6 volts. With this bias the change of deflection becomes too small to read with less than 1.41 volts peak, giving an effective range from 1 to 3.53 volts (R.M.S.). To read inputs of the order of 1 volt (R.M.S.) more accurately the bias may be altered to —3

Digitized by Google

volts, changing the effective range to 0.2 to 1.4 R.M.S. volts, and so on. To measure very small voltages most accurately no negative bias should be used, but in this

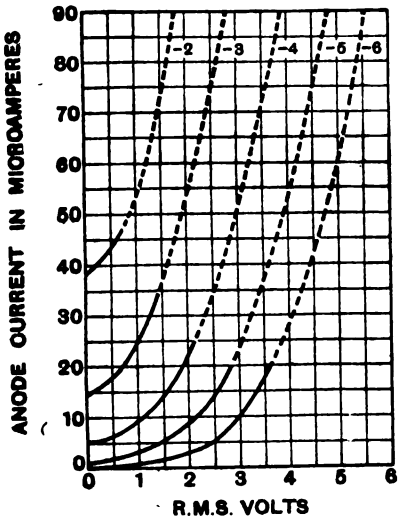

Fig. 2. *Calibration curves of deflection voltmeter, Type I.*

case the range should be restricted to the measurement of a few tenths of a volt only, owing to the increasing load produced by grid current as the A.C. voltage is raised. The lowest voltage measurable with this type of voltmeter and a microammeter is of the order of 0.1 volt. It may be mentioned that a different calibration is necessary for each range. The calibrations may be conveniently arranged in linear form, on a postcard, as shown in Fig. 3. The A.C. volts corresponding to any anode current may be read

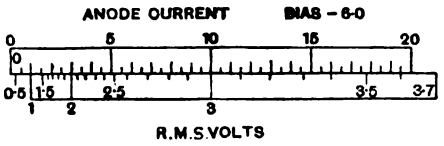

Fig. 3. *A convenient method of recording voltage calibrations of a microammeter scale.*

directly from the lower of the two scales corresponding to the particular bias in use.

The general effect of anode voltage on the sensibility is illustrated in Fig. 4, in which the relation between anode current and anode voltage is shown, for zero applied voltage by curve *A*, and for a certain constant A.C. voltage by curve *B*. The change in anode current (*i.e.*, the vertical difference between curves *A* and *B*) is shown to an enlarged scale by curve *C*. In this particular case,

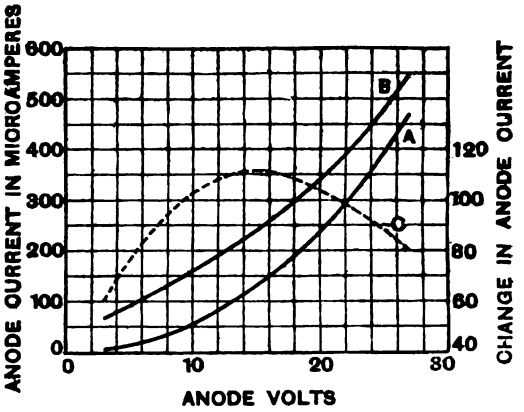

Fig. 4. *Effect of anode voltage on the sensibility of the Type I voltmeter.*

in which no grid bias was used, the best H.T. was 15 volts. The best value, however, increases with the bias. Thus, although the voltmeter may be used with the anode instrument connected direct to L.T.+, the

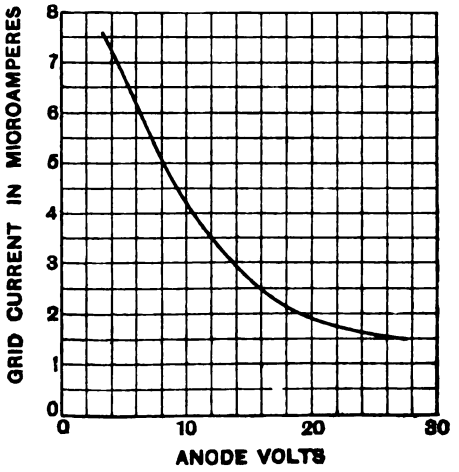

Fig. 5. *Effect of anode voltage on grid current.*

sensibility is considerably increased with a certain amount of extra anode voltage, particularly when the grid is given a steady negative bias. This extra voltage is also beneficial in another respect: it reduces the

Digitized by Google

possibility of grid current to some extent, as shown by the curve in Fig. 5, which refers to the same valve with zero grid bias.

(*b*) *Frequency Error.*

There does not appear to be any appreciable frequency error in this type of voltmeter up to a frequency of 2×10^6 cycles. A calibration at this frequency agreed within the limits of experimental error with one at 40 cycles,* and further, the A.C. calibration under any given conditions is calculable exactly from a static characteristic of the valve. Fig. 6 shows how close is the agreement between a calculated and observed

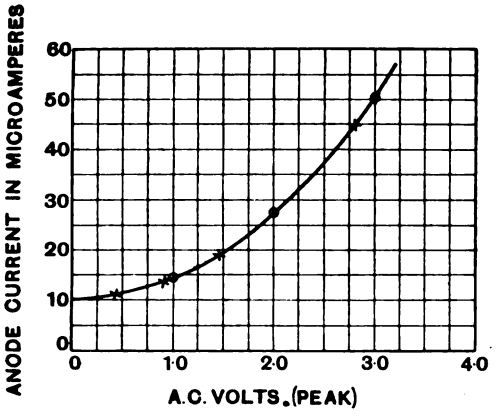

Fig. 6. *Close agreement of a calculated and observed calibration curve.* (*See Table IIIa.*)

calibration. The points on the curve located by ×'s were obtained from an A.C. test, those shown by circles were calculated from the static characteristic. The calculations are given in detail in the Appendix.

(*c*) *Wave Form Error.*

Errors may arise if the instrument is used to measure voltages having a wave form different from that on which it is calibrated. The errors become more serious as the amplitude of the voltage is increased, *i.e.*, as the instrument reads nearer the top of its scale. The lower part of the scale follows a square law approximately and no wave form error occurs where this law holds, but over the middle and upper parts of the scale the calibration approximates more to a linear law and large errors may be introduced on a distorted wave. To give some idea as to the magnitude of these errors the results of a comparative test are given in Table I. and

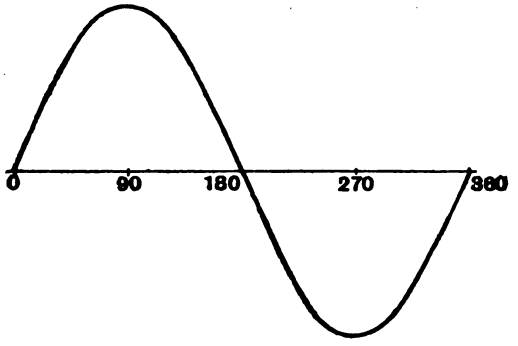

Fig. 7. *Wave form* (A)—*a sine wave.*

Fig. 10 for (*a*) a sine wave, (*b*) a wave with a pronounced third harmonic, and (*c*) a wave with a second harmonic. The wave forms are given in Figs. 7, 8 and 9 respectively. The equations to these wave forms, neglecting unimportant higher harmonics, are :—

(*b*) $E = \sin \omega t - .31 \sin 3\omega t + .05 \sin 5\omega t$

(*c*) $E = \sin \omega t + .26 \sin\left(2\omega t + \frac{\pi}{2}\right)$

In (*b*) the ratio of peak value to R.M.S. is 1.83, and in (*c*) the ratio peak/R.M.S. is 1.05

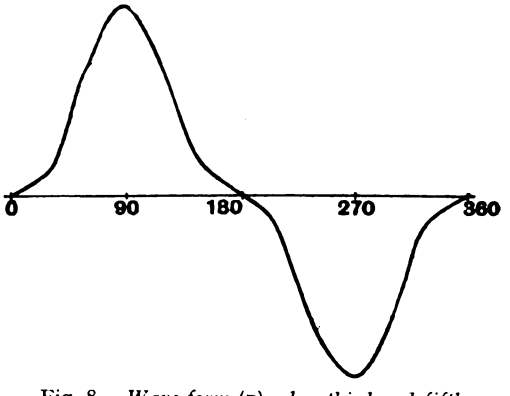

Fig. 8. *Wave form* (B)—*has third and fifth harmonics.*

for the flat half and 1.77 for the reverse half of the wave, the ratio of the peaks being 1.7. The errors in the last three columns of Table I. were deduced from the sine wave calibration.

* Care was taken to eliminate harmonics in the wave forms.

Digitized by Google

The results in Table I. show that the large third harmonic (*b*) increases the reading about 2 per cent., the flat half of the second harmonic (*c*) produces a more variable and rather larger error, and the peaky half of (*c*) produces unexpectedly large errors of the order of 22 per cent. for readings greater than 1 volt.

TABLE I.

H.T. = 18 volts. Grid bias —3.0 volts.

R.M.S. volts.	Anode current (μA) with wave forms.				Per cent. error.		
	a	*b*	*c*		*b*	*c*	
			Peaky half making grid +	Flat half making grid +		Peaky half +	Flat half +
0	14.5	14.5	14.5	14.5	—	—	—
0.5	17.5	17.7	17.8	16.8	+0.5	+ 0.6	−16.0
1.0	24.0	25.3	28.0	24.5	+7.0	+22.0	+ 2.0
1.5	35.0	37.7	47.3	37.1	+6.0	+25.0	+ 5.3
2.0	52.4	54.0	71.0	55.7	+2.0	+21.0	+ 3.2
2.5	75.0	77.0	101.5	78.5	+2.0	+21.0	+ 3.2
3.0	100.0	101.4	137.0	105.0	+0.8	+23.0	+ 3.3

These wave form errors are great enough to indicate the necessity for care in the use

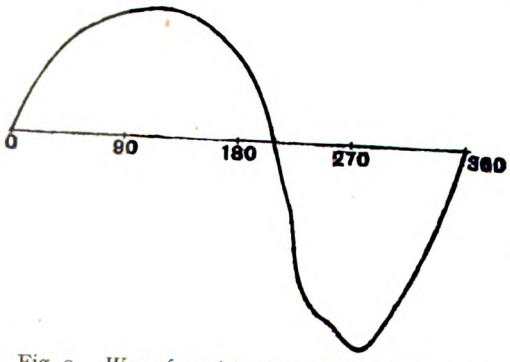

Fig. 9. *Wave form* (c)—*has a second harmonic.*

of a valve oscillator, the supply from which contains both even and odd harmonics. Such a supply may be effectively filtered by picking up through a tuned circuit loosely coupled to the oscillator. For instance, the E.M.F. wave (*b*), Fig. 8, was applied across an inductance loosely coupled to a circuit tuned to the fundamental. The wave form of the voltage across the condenser of this tuned circuit did not differ perceptibly from a sine wave.

(*d*) *Input Load.*

The power factor of this type of voltmeter can be reduced to a fairly low figure when the voltmeter is operated under proper conditions as regards the value of the steady bias in relation to the peak value of the A.C. voltage, and with a moderate value of H.T. voltage. The power factor, however, rises very rapidly once the grid is allowed to attain a positive potential during any part of the cycle of the input voltage. A typical set of power factor measurements on an "R" type valve are given in Table II. In this table the second column shows the input

TABLE II.

Conditions.	Capacity. ($\mu\mu$F)	Power factor.	Relative power lost.
A	1.4	.011	1
B	5.7	.019	7
C	8.0	.025	13

capacity, and the fourth column the power lost expressed as a ratio to that lost under conditions (A). The conditions are as follows :—

(A) Voltmeter panel with valve holder, terminals, and all internal wiring. Excluding the valve and external connections to H.T. and L.T. batteries.

(B) Same as (A), but with the valve in its holder.

(C) Voltmeter under working conditions, with an input of 2 volts R.M.S. at λ = 480 metres. Bias —3.3 volts. H.T. 25 volts. Mica condensers of .02μF connected across the bias and from anode to L.T.—.

From the above results it will be seen that half the total loss with the voltmeter working near the top of its scale is due to losses in the dielectrics used in the construction of the valve. These losses vary considerably in valves produced by different firms and if one has a number of suitable valves to choose from, it is worth while making a preliminary test of their relative losses. The test necessary to classify the valves in their order of losses is a very simple and rapid one. On high frequencies a condenser connected as shown in Fig. 1 may materially reduce the power factor.

Digitized by Google

(*e*) *Stability of Calibration.*

Error due to some internal change in the valve itself appears to be very small. For example, one valve used continuously for 12 months showed no appreciable change in

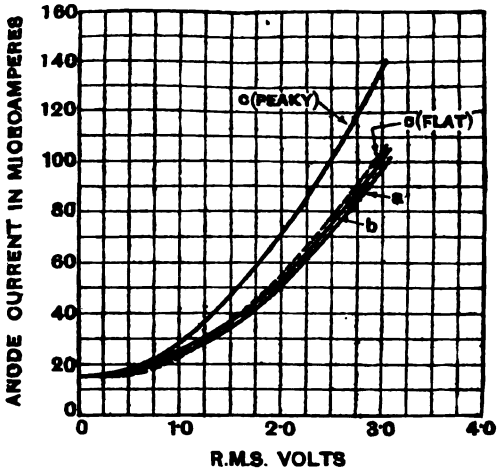

Fig. 10. *Calibration curves of the Type I voltmeter on wave forms* (A), (B), *and* (C).

calibration over this period. In fact, any internal change is very largely compensated for when the voltmeter is operated by adjusting the filament current to produce a constant value of anode current with no A.C. volts on the grid. This method also partially

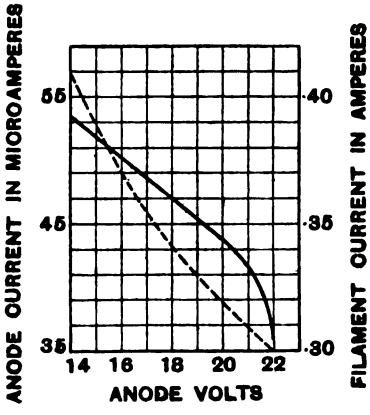

Fig. 11. *General effect of a change in anode voltage on the calibration of the Type I voltmeter.*

compensates for changes in anode voltage and grid bias, but serious errors may arise if these voltages differ much from their original values.

The effect of change in anode voltage is shown in Fig. 11 by the full line curve, which was obtained under the following conditions with a 235-type valve: Constant grid bias — 2.8 volts, constant anode current with no A.C. volts 10μA (the filament current necessary to give this reading with various anode voltages is shown by the dotted curve). Constant input of 2 volts R.M.S. Curves obtained under other conditions were of similar shape, showing increasing slope as the H.T. was increased and the filament current reduced.

Unless the filament current is low the anode current rises linearly as the anode voltage is reduced. The slope of the curve in Fig. 11 is such that 1 volt (say 5 per cent.) change in H.T. alters the anode current by 1.65μA.

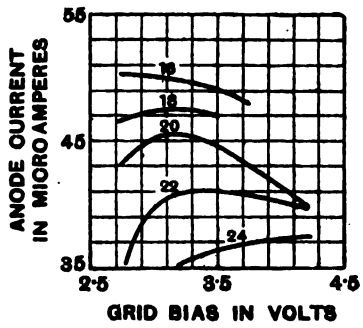

Fig. 12. *General effect of a change in bias voltage on the calibration of the Type I voltmeter.*

From a calibration curve it was found that this change in anode current corresponded to a change in A.C. volts of .04 volt, *i.e.*, from 2.00 to 2.04 volts, or 2 per cent. Thus near the top of the scale the voltmeter reads 1 per cent. high when the anode volts drop 2.5 per cent. With low filament currents the error becomes greater.

The effect of a change in steady grid bias is shown in Fig. 12 for the same valve with the same anode current with no A.C. volts and with a constant input of 2 volts as before. The anode current with the A.C. voltage applied was noted for a series of values of the bias (after adjustment of the filament current to give the same "zero" of 10μA). The results for five different values of the anode voltage from 16 to 24 volts are as shown in Fig. 12. It will be noted that the general slope of these curves is very much less than is the case in Fig. 11

Digitized by Google

(horizontally they cover about the same percentage change in voltage) indicating, in general, a much smaller error due to a change in the bias than is produced by the same percentage change in anode voltage. Fig. 12 shows that as the bias is reduced the curve may rise, keep level, or fall, according to the operating conditions; thus these may be chosen so that little error is produced by, say, a 20 per cent. fall in bias voltage.

Type II.—Deflection Type with Leaky Grid Rectification.

The connections of this type of voltmeter are shown in Fig. 13. In this type the galvanometer reading decreases as the input voltage is increased. Its obvious advantages over the former type are that it does not require a closed input circuit, *i.e.*, it can be used to measure the voltage across one of two condensers in series, and it is not affected

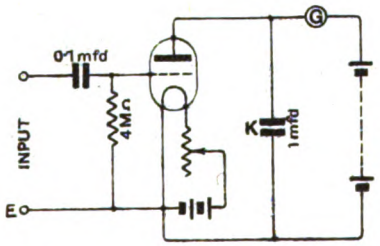

Fig. 13. *Connections of the deflection voltmeter, Type II, with leaky grid rectification.*

by any D.C. voltage across the input provided the grid condenser has an insulation resistance very much greater than the resistance of the leak. The importance of high insulation resistance in the grid condenser cannot be emphasised too strongly. To take an extreme, but quite practical case, suppose one wishes to measure the A.C. voltage across an anode resistance of 50,000 ohms in a resistance-coupled amplifier, and suppose the A.C. voltage to be measured is of the order of 1 volt. The anode current (D.C.) may be of the order of 2 milliamps, giving a D.C. drop on the resistance of 100 volts. A simple calculation will show that a D.C. voltage exceeding 1 per cent. of the A.C. voltage will be applied to the grid unless the insulation resistance of the grid condenser exceeds the huge figure of 20,000 megohms, with a grid-leak of 2 megohms. The necessary insulation resistance of the condenser increases with the leak resistance.

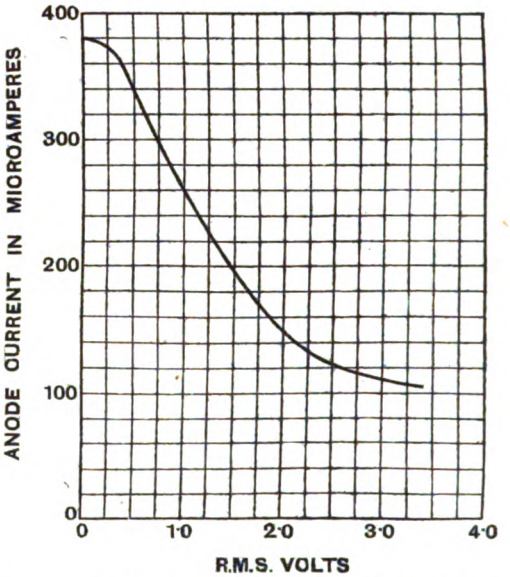

Fig. 14. *Specimen calibration curve of the Type II voltmeter.*

(a) Sensibility and Range.

A specimen calibration for a voltmeter of this type is shown in Fig. 14. From this curve it is evident that the sensibility is greatest between the limits of 0.5 and 2 volts, and falls rapidly for voltages exceeding 2.

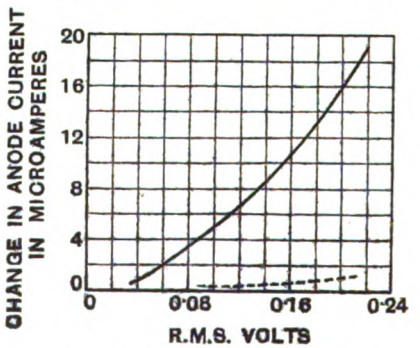

Fig. 15. *A low voltage calibration curve of the Type II voltmeter.*

Thus the range is restricted to the measurement of not more than about 3 volts, and we have not been able to devise any simple way of extending the range, such as can be done in the first type by adjustment of the grid bias.

Digitized by Google

A low voltage calibration is shown in Fig. 15 by the full line curve. For comparison a calibration over the same range for a Type I. voltmeter is shown by the dotted line. The grid-leak type appears about three times more sensitive than the other, and reads down to about .04 volt with a microammeter. Owing to the large steady anode current with no applied voltage it is usually necessary to balance out this current in order to avoid having to shunt the microammeter and thus lose entirely the extra sensibility of this method. The usual balancing arrangements are shown in Figs. 16 and 17. A low resistance potential divider is connected across the filament accumulator (Fig. 17) or separate accumulators (Fig. 16). Current through the galvanometer from the potential divider is

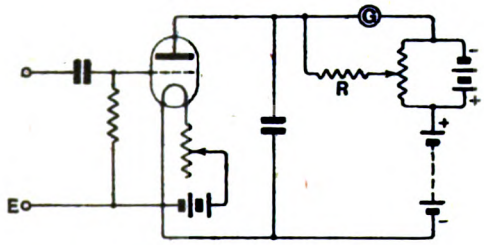

Fig. 16. *A method of balancing out the steady component of anode current.*

in the opposite direction to the steady anode current, and may be made equal and opposite to it by adjusting the potential at the tapping end of the resistance *R*. The resistance *R* should be made large compared with that of the instrument and potential divider to minimise loss of sensibility due to its shunting effect. The multiplying power of the shunt has usually to be determined from a separate calibration.

Unlike the first type of voltmeter, the leaky grid type will not operate when the anode voltage is below a certain value. With low anode voltages rectification on the lower bend of the characteristic occurs and the anode current rises—instead of falling—with increased applied volts. It is, in fact, possible to adjust the H.T. so that no change in anode current occurs when a voltage is applied to the grid. These points are well shown in Fig. 18, in which the full line curves show how, in an actual test, the anode current varied with the H.T. with (*a*) no voltage applied to the grid and (*b*) an alternating voltage of R.M.S. value 1.61 volts was applied. The change in anode current due to the A.C. voltage is shown to an enlarged scale by the dotted curve.

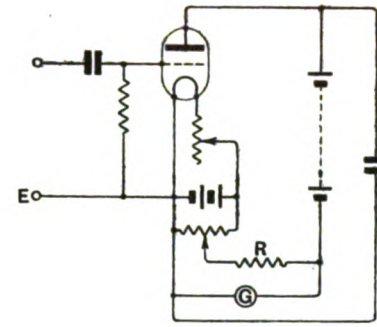

Fig. 17. *Another method of balancing out the steady component of anode current.*

The best potential to be applied to the filament end of the grid-leak has to be determined by trial, but it may be mentioned here that any gain in sensitivity due to a positive potential on the leak may be more than offset

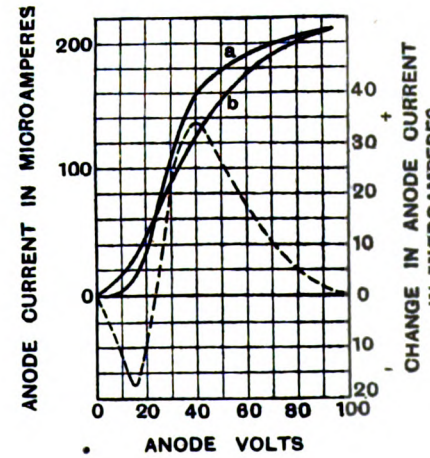

Fig. 18. *Effect of anode voltage on the sensibility of the deflection types of voltmeter.*

by the rise in power factor of the voltmeter due to this positive connection, and by the possibility of a change in calibration due to alteration of this potential as the cells run down.

Digitized by Google

(*b*) *Frequency Error.*

This type of voltmeter is not entirely free from frequency errors, although these may be made small by suitable choice of values for the grid capacity and leak resistance. For present purposes the voltmeter is equivalent to the arrangement shown in Fig. 19, in which R is the leak resistance, K_1 the grid condenser, and K_2 the sum of the grid-filament and grid-anode capacities, including the capacities of the leak and wiring. K_2 will be of the order of $10\mu\mu$F, having a reactance of 20,000 ohms at a wavelength of 377 metres, rising to 300 megohms on about 50 cycles. As the leak resistance R will be between the limits of 1 to 10 megohms it is evident that at high frequencies the effect of R is negligible, whereas at very low frequencies that of K_2 is negligible.

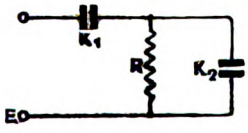

Fig. 19. *Equivalent input circuit of the Type II voltmeter.*

Thus we have to make the reactance of K_1 small compared with that of K_2 at high frequencies and also small compared with R at low frequencies. The first condition can be met by making K_1 say, 1,000 times K_2, or about $.001\mu$F, but this value is not large enough to satisfy the second condition. Suppose we wish to limit the error on 50 cycles to 0.25 per cent. using a 4-megohm leak, then the minimum value of K_1 may be calculated from the formula

$$K_1 = \frac{10^7}{\omega R\sqrt{2e}}\ \mu\text{F},$$

in which e is the percentage error assumed to be small. In this case $e = .25$. As $\omega = 2\pi \times 50 = 314$, and $R = 4 \times 10^6$, the value of $K_1 = .011\mu$F. If the leak resistance is reduced to 2 megohms., K_1 becomes 0.022μF, and for a 1 megohm leak K_1 rises to 0.045μF.

The final choice of grid-leak resistance value will be determined from the four following considerations: (1) The resistance must be high to minimise frequency error with a reasonable capacity in the grid condenser; (2) The D.C. resistance must be high so as not to add very appreciably to the power factor of the voltmeter.* From this view-point it should not be less than 2 megohms; (3) It should not be so high that the grid takes appreciable time to steady down to its steady potential. With 10 megohms the grid becomes sluggish, and the value should be below this figure; (4) It should be as low as possible to prevent error due to D.C. potentials leaking through the condenser insulation, as has already been mentioned above. In view of the last two considerations the leak should lie between 2 and 4 megohms.

(*c*) *Wave Form Error.*

In order to make a direct comparison with Type I. of the effect of wave form on the calibration of the Type II. voltmeter, the leaky-grid type was tested on exactly the same wave forms and over the same range as described above in connection with Type I. The results are collected in Table III., the letters (*a*), (*b*) and (*c*) having the same meaning as before. These calibrations are shown graphically in Fig. 20.

TABLE III.

R.M.S. volts.	Anode current (μA) with wave forms.				Per cent. error.		
	a	*b*	*c* Peaky half making grid +	*c* Flat half making grid +	*b*	*c* Peaky half +	*c* Flat half +
0	230	230	230.0	230.0	—	—	—
0.5	188	180	176.0	200.0	+14	+24	—22
1.0	150	130	136.0	170.0	+45	+30	—30
1.5	128	100	107.0	154.0	+75	+47	—37
2.0	112	82	93.0	143.5	>100*	+70	—43
2.5	102	72	87.5	136.8	>100*	>100*	—49
3.0	96	66	84.0	132.8	>100*	>100*	—54
3.5	92						
4.0	90						
4.5	89						

* Outside the range of the sine wave calibration.

The errors are enormously greater in the Type II. voltmeter than in Type I. In fact there is only one single observation in Table III. with an error less than 20 per

* This must be distinguished from the A.C. resistance, associated with the self-capacity of the leak, which is in parallel with the D.C. resistance. The former resistance causes most of the losses on high frequencies unless the D.C. resistance is quite low.

Digitized by Google

cent. Some of the errors are too great to be evaluated on the sine wave calibration. For example, with 3 volts R.M.S. the anode current with the third harmonic wave *b*

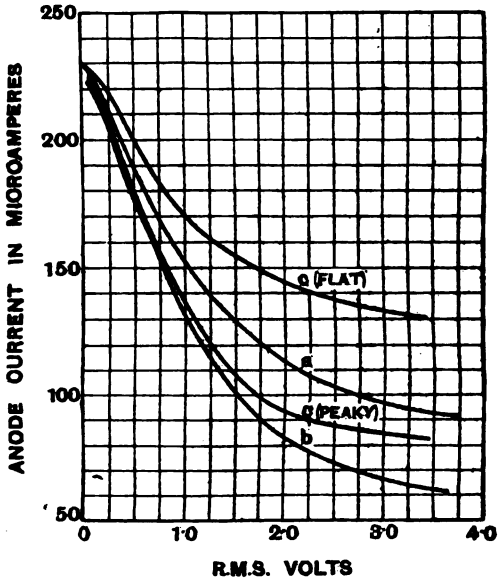

Fig. 20. *Calibration curves of the Type II voltmeter on wave forms* (A), (B), *and* (C).

is 66. The sine wave calibration cannot usefully be continued down to this anode current as it flattens out in the region of 4 volts and 90μA.

In the above test the frequency was 82 cycles, the leak resistance 3 megohms, and the grid condenser 0.3μF.

(*d*) *Input Load.*

The power factor of this type of voltmeter is very considerably higher than that of the first type. This is due partly to the grid current necessary for the action of the voltmeter, and partly to losses in the leak resistance. Some typical results are given in Table IV. These results were obtained with the same valve mounted on the same panel and with the same input conditions as for the results shown in Table II. so that a direct comparison of the two sets of results may be made. The power lost (Table IV.) is relative to *A* (Table II.). The results are shown for the same voltmeter, using three different leaks (connected to a potential of + 2 volts), and the results for the leaks alone are given separately.* The resistance element in the case of leak *D* was a plastic compound, the D.C. resistance being 4 megohms. Readjustment of this resistance to about 10 megohms did not affect the A.C. losses appreciably. Leak *E* was a piece of some ebonite substitute sold for use as panels in wireless sets. The D.C. resistance was 4 megohms. Leak *F* was made from sodium silicate which

TABLE IV.

Conditions.	Capacity. ($\mu\mu$F)	Power factor.	Relative power lost.
Grid-leak D	1.0	0.19	12.0
Grid-leak E	2.0	0.52	68.0
Grid-leak F	0.4*	0.41	11.0
Grid-leak G	1.2	0.12	9.0
Voltmeter with leak D	9.0	0.006	39.0
Voltmeter with leak E	10	0.13	85.0
Voltmeter with leak F	8.4	0.006	36.0

* Estimated value.

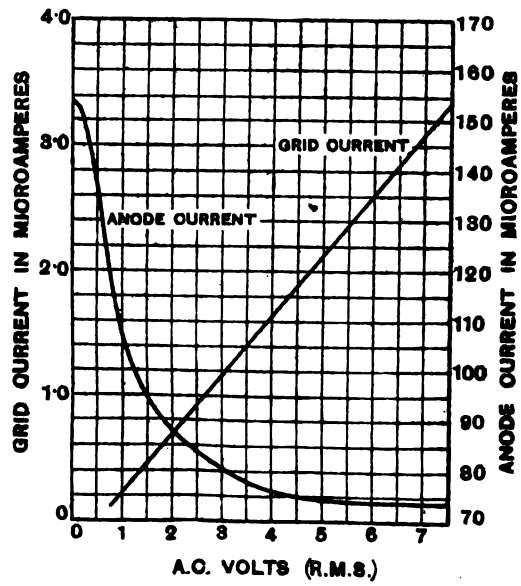

Fig. 21. *Effect of input voltage on grid current in the Type II voltmeter.*

was contained in an ebonite tube carrying a terminal at each end. The D.C. resistance

* If the leak behaved on A.C. as a pure ohmic resistance of 4 megohms, the power lost in it would have been represented by the low figure of 2.7.

Digitized by Google

was 3 megohms. Leak *G* was a pencil line on ebonite. The D.C. resistance was 3 megohms. The power factor of the voltmeter appeared to be practically independent of the input voltage. Any change due to change in grid current was probably swamped by the large constant losses in the circuit. The manner in which the grid current varies with

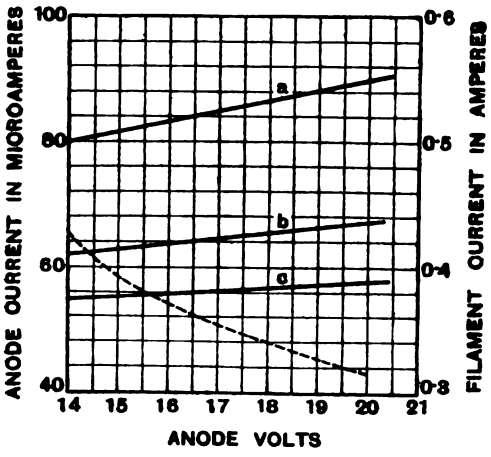

Fig. 22. *General effect of a change in anode voltage on the calibration of the Type II voltmeter.*

the input voltage is shown by the straight line in Fig. 21. The curve shows the anode current calibration obtained at the same time.

(*e*) *Stability of Calibration.*

The calibration of this type of voltmeter may alter due to a change in (1) the valve itself, (2) the anode voltage, (3) the resistance of the grid-leak, (4) the potential applied to the end of the leak when this is not connected to L.T. —.

Regarding (1), we have no definite experimental results, but it appears probable that internal changes are practically compensated for by the initial adjustment of the filament current to give a definite false zero of anode current. The general effect of change in anode voltage is shown in Fig. 22. These results were obtained by adjusting the filament current, for each value of the H.T., until the same anode current (120μA) was obtained with no A.C. volts. The anode current with A.C. volts on the grid was then noted. It is the relation between this anode current and the H.T. which is plotted in Fig. 22, for the following A.C. inputs (*a*) 0.83 volts, (*b*) 1.64 volts and (*c*) 2.44 volts. The dotted curve shows the corresponding variation of filament current. The valve was of the 235-type. A change in H.T. of 1 per cent., causes an error of about 1 per cent. in the reading at 1 volt input, under the conditions of this particular test.

The effect on the calibration due to a change in leak resistance varies considerably with the type of valve and the conditions under which it is operated. A typical set of results is shown in Fig. 23, from which it will be seen that with leaks less than 4 megohms the calibration changed much more rapidly than it did with leaks greater than 4 megohms. The calibration in the region of 2 volts R.M.S. changed 1 per cent. when the leak changed 1.3 per cent. when set at 1.5 megohms, and 6 per cent. when set at not less than 4 megohms. In the test to

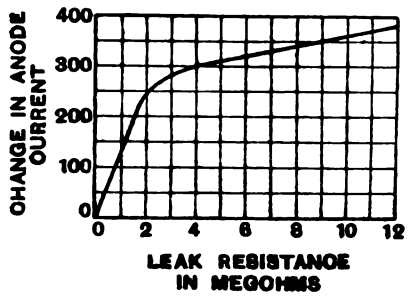

Fig. 23. *General effect of a change in leak resistance on the calibration of the Type II voltmeter.*

which these figures refer the anode current with no input was maintained at a fixed value, as the leak was varied, by adjustment of the filament current. The A.C. input was kept constant at 2.19 volts R.M.S.

If the leak is connected to L.T.+ there may be a further change in calibration as the accumulators run down.

(*To be continued*).

Digitized by Google

A High-Tension Rectifier for a Low-Power Transmitter.

By T. S. Skeet. **[R355.51**

THE apparatus about to be described works from 200V, 50 cycle A.C., and delivers smooth D.C. at approximately 620V and any current up to 60 milliamps.

Other voltage and current loads may be obtained as required; the output at high voltage being limited by the flash-over point of the commutator and by the voltage which can safely be applied to the smoothing condensers.

The apparatus consists of (*a*) A ½kW house lighting transformer suitably re-wound; (*b*) A small 100V A.C. motor converted to a synchronous motor and fitted with separate rectifier commutator; (*c*) Starting switches; and (*d*) A smoothing unit.

The transformer and smoothing unit were used for a considerable time with chemical rectifiers, but a device whose voltage output was less dependent on load current was desired, and the synchronous rotary rectifier was evolved.

The circuit arrangement of the outfit is as shown in the diagram, and the photographs give a general idea of the equipment.

The motor, which is a two-pole machine wound for 100V (A.C.) was first fitted with ring oiler bearings, the particular form of hollow pedestal casting being very suitable for this alteration.

A light slip ring made from the shade carrier ring of a lamp-holder was next carefully forced over the armature, empire cloth being used for insulation. The ring was connected to one commutator segment and the diametrically opposite segment was connected to the shaft. To ensure that the currents shall not flow through the bearings, a steel ball was placed in the shaft centre hole, and a piece of brass rod with spring tension is pressed on to the ball, the frame connection being made to this spring contact. The other end of the shaft has a thrust bearing, so that the armature is not displaced

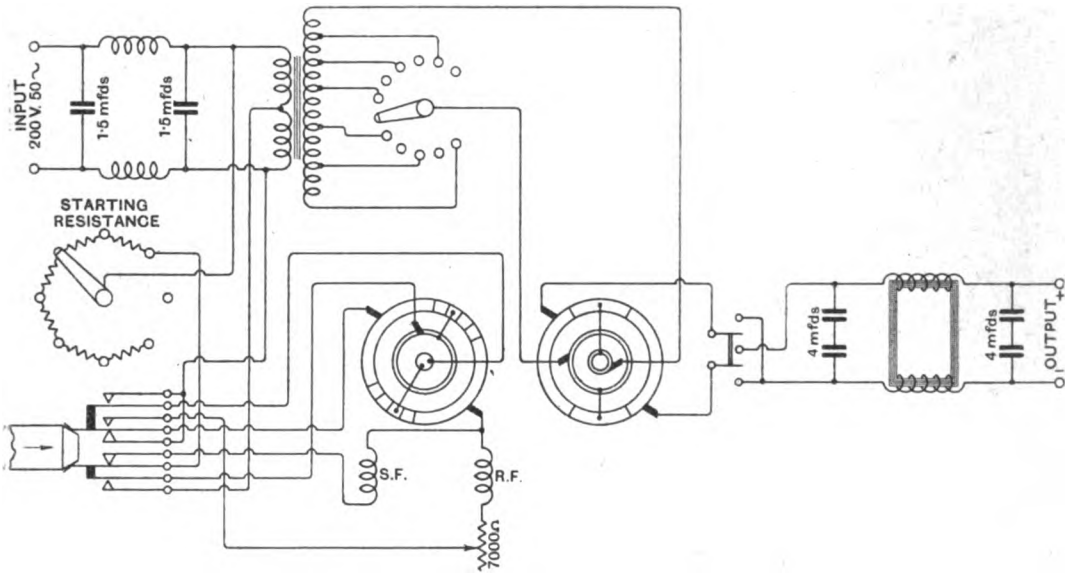

Circuit arrangement of the H.T. rectifier described in this article.

Digitized by Google

by this end tension. The various experiments with the machine occupied several months of spare time, and it may be advisable to describe briefly the ideas which were tried, and the mistakes which were made.

The field was first rewound for separate excitation from 2V, the field input being about $1\frac{1}{2}$ watts. This necessitated D.C. being used for running up to synchronous speed; the D.C. was obtained from the 200V A.C. by means of a full-wave 8-cell aluminium-lead rectifier, with a solution of borax as the electrolyte. The curious beat note given out by the machine indicates approximately when synchronous speed is reached, and at this instant the plunger switch is operated which applies the 100V A.C. to the slip ring and frame connection. After a little practice it is quite easy to make the machine synchronise. This arrangement was quite satisfactory in practice, but the additional accumulator and bulky chemical rectifier were objectionable. The next move, therefore, was to eliminate the accumulator. Once the machine was started, the brushes on the commutator were idle, and as a D.C. voltage of approximately 130 could be obtained from them, the field was rewound to absorb about 2 watts at this voltage. This alteration necessitated a re-arrangement of the switching system, and the plunger switch which had originally only six contacts now has nine.

The new system also necessitated D.C. for starting, and as the chemical rectifier was not available at this period, the current was obtained from the receiving H.T. battery (accumulators, home-made, of approximately 0.1 A.H. capacity), the machine was found to synchronise quite as readily as when separately excited.

The necessity for starting up from the very small H.T. battery was the next objection, and efforts were made to start up from A.C. A separate winding of comparatively few turns of 38 gauge wire (D.S.C.) was put on the field, and attempts made to start up as an A.C. motor. Great difficulty was experienced in getting the motor to run up to speed, and the first starting winding was burnt out in the attempt. The reason for the difficulty was not obvious and occupied considerable time in finding.

The machine has laminated fields and a very small air gap, and is therefore a fairly efficient transformer. The running winding has sufficient turns to give an induced E.M.F. of 3,000V when 200V are applied to the

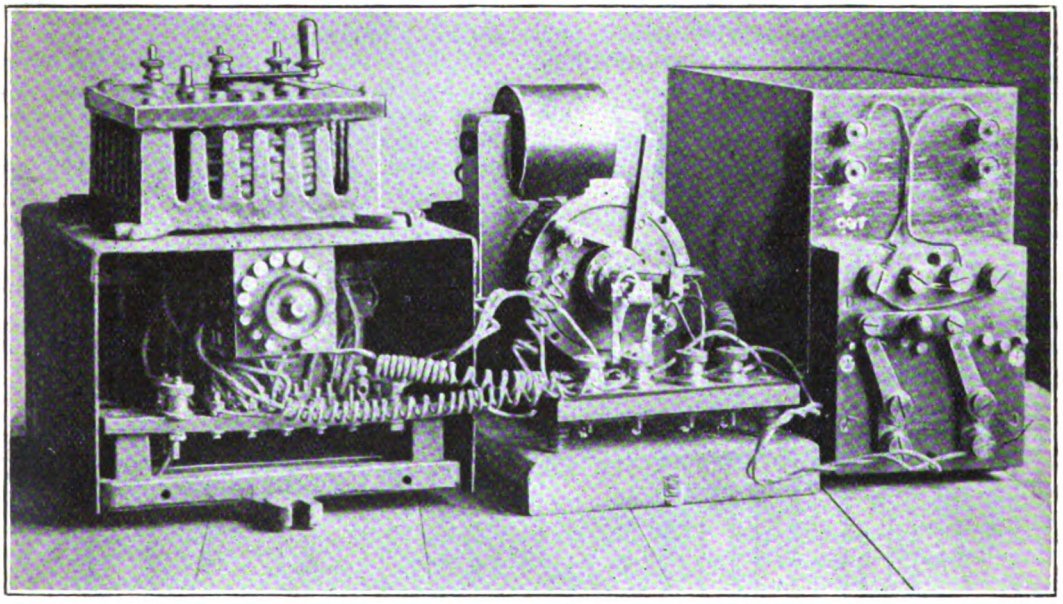

The complete apparatus.

Digitized by Google

armature and starting windings. The ends of this running winding were connected to a switch contact on the slate base and a terminal mounted on a fibre strip on the machine frame, and whilst this insulation was quite O.K. for 130V D.C., it was useless for 3,000V. The effect of the leakage current was practically to short circuit the running winding, and therefore to reduce the field flux to a very small amount. Increase of starting current merely increased the leakage and resulted, as before stated, in a burnt-out starting winding. After the insulation was improved the motor started up and synchronised without further trouble. It was thought that all trouble was now over, and that it would merely be necessary to fit a commutator and slip rings to the shaft to enable loads at any voltage to be taken from the rectifier.

An account of the further failures may prevent other experimenters holding the same absurd ideas. A four-part commutator was first constructed, the live segments being about two-thirds the length of the dead segments. Gauze brushes were used for the slip rings, and carbon brushes in carefully made boxes for the commutator. This arrangement was quite satisfactory for accumulator charging, particularly when graphite brushes were used, but was hopeless for high-tension rectification, anything above 250V causing violent flash-over, with consequent shorting of the transformer. Gauze brushes were next tried, and whilst matters improved, results were anything but satisfactory.

A 14-part mica insulated commutator, with three live segments connected to each slip ring was next tried, and as this gave five separate and somewhat thick mica sections between the live portions, considerably greater success was obtained. Foliated copper brushes were next substituted and these seem far superior to anything yet tried. It is presumed that a commutator, with live segments let into an insulating disc or cylinder, would be ideal, but such an arrangement would not be particularly sound mechanically, and would be subject to rapid wear. The present arrangement has been tested with a smoothed output of 700V 30 mA and 530V 70 mA. Larger output at 700V was not tried on account of lack of suitable artificial load, and an output of 800V gave occasional flash over.

As the input from the mains to the transformer never exceeds 100 watts, a 0.5kW transformer is altogether out of proportion, the transformer was, however, obtained from a lighting contractor for 7s. 6d., and had the core size been reduced, a greater length of wire would have been needed, and the cost of the wire was of course much greater than the cost of the transformer. The transformer when obtained was "auto" wound, and as the wire occupied the whole of the winding space, it was necessary to remove

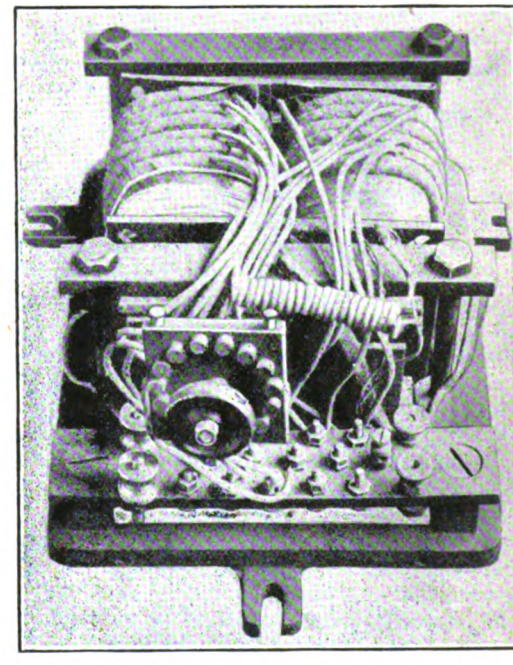

The rewound transformer.

the original 200V winding and rewind with smaller gauge wire to make room for the high voltage secondary. The transformer in question is of the "core" type, the core being composed of rectangular plates. In taking the transformer apart, only the end plates should be removed, the portions inside the coils being carefully preserved in their staggered formation by tying with tape, this will save considerable time during reassembling.

It has been observed that 3 turns per volt is a standard winding for 50 cycle transformers having iron of 3 sq. in. cross section, so that should the core be reduced the turns

Digitized by Google

must be increased proportionately, and a little consideration will show that the actual length of wire required will be greater than for the larger core. The transformer under discussion was rewound with 300 turns of 22 gauge D.C.C. on each limb, and the winding taped and varnished. A rectangular former was now constructed approximately $\frac{1}{8}$ in. long, and the same size as the outside of the primary winding, the removable metal cheeks were slotted to take four threads for tying up the coils preparatory to taping and to facilitate the removal of the coils from the transformer. Twelve coils were wound, each consisting of 340 turns of 35 gauge D.S.C. wire, and were thoroughly taped with adhesive tape. The coils were not varnished, as their flexibility assists in the placing of them in position over the primary. Six coils were placed on each limb and connected in series, a tapping being taken off at every connection and brought out to one of the 13 terminals mounted on the transformer.

The transformer was required to give a maximum voltage of 1,200, the extra 40 turns for coil being included to compensate for voltage drop on load. The centre connection of the 200V winding is brought out to provide the necessary 100V for running the synchronous motor.

Whilst the set is running on load, with the field at full strength, the voltmeter and milliammeter needles have a beat swing in step with the beat note given out by the machine. This beat effect is believed to be due to some fluctuation at the generating station, as the same note can be heard in a telephone receiver by induction from the mains. This beat trouble can be cured by mechanically loading the motor, *i.e.*, by applying friction to the shaft, but as this is very undesirable, the adjustable 7,000 ohm resistance shown in series with the running winding is varied until the beat ceases and the output is steady. The actual beat is caused by the armature changing its position periodically with respect to the phase of the supply; this fact was proved by inspecting the running machine by the light of a Neon lamp ("Osglim" type) lighted from the same supply main. The armature, when so inspected, appeared to be merely rocking backwards and forwards at the beat frequency, but the writer is unable to explain the reason for such behaviour.

The change-over switch shown on the smoothing unit is for the purpose of reversing the connections to the output circuit, this change over being often necessary owing to the fact that the direction of the D.C. depends on chance, *i.e.*, upon the manner in which the motor synchronises.

The smoothing unit employs Mansbridge 2μF paper condensers, eight of which were purchased for 12s. (Ex. Govt.). These condensers, as purchased, are useless for any purpose, except as variable (very) grid-leaks, and special treatment is required before they can be used as smoothers. The eight condensers referred to were placed upright in a large iron vessel and molten wax poured in, until the condensers were covered. The wax was then maintained at a temperature of 330°F. until all bubbling ceased (this took five hours). The wax was allowed to cool, fresh wax being added to make up for that drawn into the condensers. When quite cold the condensers can easily be broken out of the wax, particularly if they are tied together before boiling. The writer has treated many faulty condensers in this manner, and finds that they stand up to severe treatment far better than new condensers of similar make, owing, no doubt, to the fact that they are truly hermetically sealed, provided that they are totally immersed in the wax during the cooling process. The eight condensers are grouped as shown in the diagram, giving an effective capacity of 2μF across each end of the smoother, with the voltage of the supply divided between the two capacities in series. The smoothing choke is of original design, and has a closed core of $\frac{5}{8}$ in by $\frac{3}{4}$ in. cross section.

Two windings are used, each consisting of 8 ozs. of 34 gauge enamelled wire. The closed core is of rectangular form, and one winding is placed on each of two opposite limbs. One coil is connected in each leg of the supply and smoothing is very effective; in fact this type of smoothing choke with two windings is the only type which the writer has found satisfactory, either for transmission or reception H.T. supply. The fact that the core is closed and of liberal cross section, enables smoothing to be effected with comparatively few turns of wire, and consequently limited voltage drop.

The unit described above has not yet been

Digitized by Google

used for transmission purposes, but it was learned that reception of Daventry on a neighbour's crystal set was seriously impaired whilst the rectifier was running on load in the workshop.

As it is desired to run the machine for test purposes, and for work with a non-radiating aerial during broadcast hours, this interference had to be eliminated. The starting and running of the machine did not cause the trouble, which only occurred whilst the rectifier was on load, it was assumed therefore that shock excitation of some portion of the apparatus was responsible.

A case lined with tinned iron was made to accommodate the whole of the apparatus, and the joints soldered, except, of course, the door joints. The apparatus was enclosed and the lining earthed, the machine was put on load and the interference was considerably increased, but with the earth connection removed there was a slight improvement over the original arrangement.

It was noticed (on a test receiving circuit) that the interference varied with the sparking of the rectifier, and after considerable running of the commutator, previously described, it was found that the flash-over voltage was reduced, and with the commutator at rest the flash-over occurred at 800 (R.M.S.) V, due to the copper dust embedded in the mica. It was probable that the minute sparks due to this leakage were accentuating the shock excitation, and in spite of previous remarks, it was decided to construct on ebonite commutator, with brass segments let into the surface.

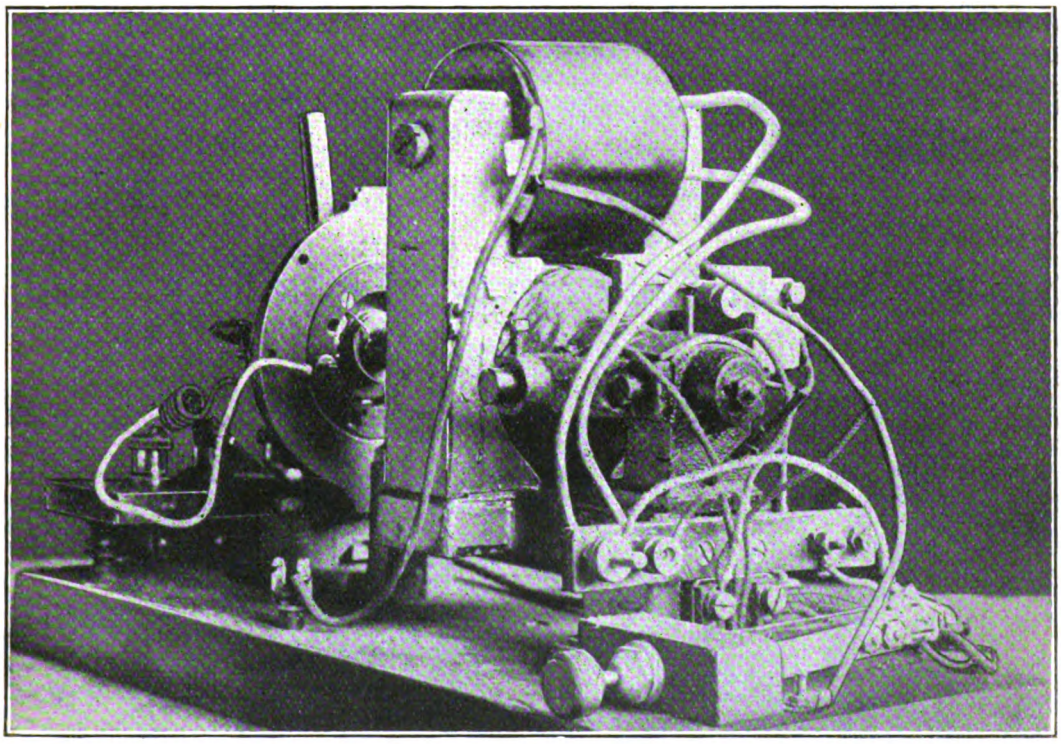

The synchronous motor (running end).

This new commutator does not flash-over, and is far more satisfactory than the other types, but it is early to judge of its wearing qualities. The result of this latter alteration was a further slight diminution of the interference.

From the results obtained by earth connecting the screen, it was deduced that the excitation was being induced into the

Digitized by Google

lighting system, the outdoor cables for which run overhead between the houses, and the next step was to provide H.F. chokes in the supply leads.

A coil of approximately 130 turns of 24 gauge wire on a 3½ in. diameter former was included in each leg of the supply, and the interference was eliminated so far as the crystal set was concerned, but was still audible on the writer's valve set, the H.T. for which is obtained from the mains.

A 1½μF condenser was next placed across the mains at each end of the chokes, and the trouble was completely cured. The energy supplied to the transformer with the secondary on open circuit is only 9 watts, so that the condensers are causing very little loss.

The excitation should be equal in either leg of the supply leads, and therefore the condensers should not make any difference, but the slight improvement noticed is probably due to the fact that one main is earthed at the sub-station transformer, with consequent inequality of the currents induced.

The casting carrying the brush-rocker disc, which may be seen in the photographs, may be recognised as the frame of an old Blake transmitter, of the carbon button and platinum contact type which saw service many years ago in the early days of telephony.

If this article has pointed out some of the errors to be avoided in the construction of a rectifier system, its object will have been achieved.

A Method of Calibrating Microphones and Loud-Speakers.

By H. J. Round, M.I.E.E. **[R290**

CONSIDERABLE difficulties occur in the calibration of microphones. A constant sound pressure over wide ranges of frequency is difficult to obtain, and reference is usually made to some theoretical basis for the purpose.

I have not seen the following method described before. It is comparatively simple, and avoids a good many of the usual difficulties, and is applicable to almost any type of microphone which employs a diaphragm. I have recently used it extensively to study the action of various microphones. In general the idea is to apply the necessary force to the diaphragm by an electrostatic force instead of an air force.

The microphone diaphragm, if not metallic, is first coated with aluminium leaf, which leaf is extended all over the microphone, and well earthed.

If the microphone has a metallic diaphragm fixed in a metallic case, there will be no necessity to do this if the case can be earthed. (The W.E. electrostatic microphone is an example of this.)

Near the diaphragm surface is placed a solid flat-faced metallic block, the flat face of which can be brought to about 2 mm. from the diaphragm surface. Various shapes of block may be used to check whether any air pocket resonance is present.

If the block be now statically charged to a high voltage (from 600 to 1,500 volts I find convenient), a force is applied to the diaphragm, and if now superimposed on this

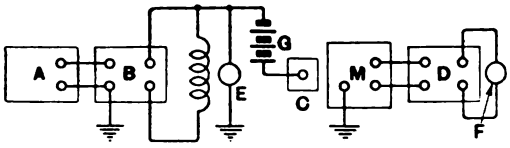

Fig. 1.

voltage an alternating E.M.F. of any frequency is applied—the E.M.F. of which can be measured—the alternating component of the force produces a current in the microphone circuit which can be measured and plotted against the applied force.

Fig. 1 is an overall representation of the apparatus used.

Digitized by Google

A is a musical note producer, which will be described later.

B is a resistance amplifier using a plate voltage of 300 volts to get large undistorted amplitudes.

C is the solid metallic block.

M is the microphone, modified if necessary as described above.

D is the microphone amplifier.

G is a polarising battery.

E and *F* are A.C. voltmeters of the slide back type placed where indicated, and the curve is plotted between their readings.

tone, magnified up to the value desired, is of almost constant amplitude, and, in fact for rough experiments, can be assumed constant.

Calibration of note frequency is done on the condenser of the second oscillator and must be done frequently by means of one or two tuning forks. Fortunately the frequency scale is nearly linear.

The resulting beat tone is magnified up by means of a carefully constructed resistance amplifier. Harmonics are, of course, introduced, and for very accurate work must be removed by cut-off filters after the last stage

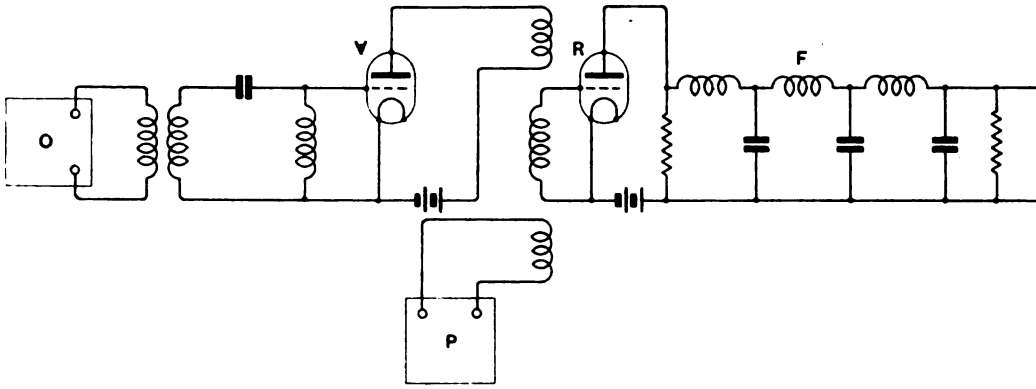

Fig. 2. *Circuit arrangement of the note producer and amplifiers.*

This curve can be taken as the curve between air pressure at the diaphragm surface and output open circuit volts. Absolute values can, of course, be obtained.

It may be of interest here to give a more detailed description of the note producer and amplifiers (Fig. 2).

A weak 3,000 meter fixed oscillator *O*, fitted in a shielding box, is fed through one loosely-coupled circuit—to remove harmonics—to a valve *V*, and thence induces into a rectifier *R*.

Another more powerful oscillator *P*, the frequency of which is variable and without a coupled circuit attached also induces into the circuit attached to the rectifier valve *R*.

The resulting beat tone in the plate circuit of the rectifier *R* is fairly pure and free from harmonics. A filter circuit *F*, to remove all H.F., is then inserted, and the purified beat

of amplification, but for a lot of work they can be neglected.

The above method for producing notes of constant amplitude was suggested to me by Mr. Norman Lea, and the arrangement of apparatus, including the addition of a coupled circuit for one of the H.F. oscillators, was made by my assistant Mr. N. M. Rust.

The idea of this coupled circuit is very interesting. If two oscillators are beating together and being rectified, and both produce harmonics the resulting beat tone will have similar harmonics, but if only one set of harmonics is removed the result is a freedom from harmonics in the beat tone.

A modification of the test with which I am now experimenting, is to balance the input and output in a bridge system which will give the phase angle as well as the amplitude curve.

Digitized by Google

Recent Developments in Short-Wave Wireless Telegraphy.[1]

By H. Rukop

(*Telefunken Company*).

[R401

I.—Previous History.

THE technics of wireless telegraphy throughout the whole world have experienced a great surprise during the past two years as the result of the unanticipated effectiveness of short waves for Transoceanic traffic. In this connection, waves of about 100 metres and less are to be understood as short waves, *i.e.* electrical oscillations of frequencies of about three million cycles per second and over, which have produced quite extraordinary results over great distances.

Although wireless telegraphy can now look back upon a lifetime of 25 years, it must nevertheless, as compared with other industries and branches of technology, be accounted a very young industry, in which development has proceeded with extraordinary rapidity and constant change, but one which has in no way reached a state of equilibrium. There does not yet exist any generally recognised best system of transmission, and in reception also there are still countless variations, even although, in the fundamental principles of wireless telegraphy, in the electro-dynamic action in the apparatus itself, as well as in the process of radiation and reception with aerials, there are hardly any differences of opinion worthy of mention. The explanation of the propagation of the waves over our earth has, however, always proved an extremely difficult matter. This propagation has been extensively dealt with in exhaustive theoretical and practical investigations from the very first years of wireless telegraphy (J. Zenneck, A. Sommerfeld, H. Poincaré, J. W. Nicholson, L. W. Austin, V. Rybczinski, L. F. Fuller, W. H. Eccles[2]), and there is no doubt that the true conditions have been depicted with approximate correctness by the formulæ of the respective authors. The formulæ ascertained by methods of calculation relating to the propagation along the surface of the earth take account of numerous factors: the properties of the waves themselves, the conductivity and dielectric properties of the earth's surface, the divergence of the radiation away or "Dispersion" from the earth in consequence of the spherical form of the latter, but they do not contain at the outset any terms which take account of the absorption, reflection or refraction on the earth itself or in the atmosphere. Now, if it is desired to express the intensity of the electrical field prevailing at a certain distance from a known transmitter and proceeding from its radiation, one uses for the purpose preferably the Austin - Cohen formula:

$$E = 120\pi \frac{J_s h_s}{\lambda d} \sqrt{\frac{\delta}{\sin d}}\, e^{-\frac{0{,}0015 d}{\sqrt{\lambda}}} \text{ microvolts per metre,}$$

which, as compared with the calculated formulæ of the above-mentioned authors, contains a small correction ascertained by measurements. In this formula, J_s signifies the intensity of current in the transmitting aerial, h_s its effective height of radiation, λ the transmitted wavelength, d the distance of the place of reception from the transmitter measured along the greatest circle of the sphere, all in km., δ the angle subtended at the centre of the earth by the two stations, and E the electrical field

[1] Translation of a paper read at the meeting of the Deutsche Gesellschaft für Technische Physik, Danzig, in September, 1925, published in the *Telefunken Zeitung*, January, 1926.

[2] For publications on this subject see: J. Zenneck and H. Rukop, *Lehrbuch der drahtlosen Telegraphie*, 5th Ed., p. 294; A. Hund, *Hochfrequenz-Messtechnik*, p. 204 and following; J. Zenneck, *E.u.M.*, 43, 1925, p. 593; G. J. Elias, *E.N.T.*, 2, 1925, p. 351.

Digitized by Google

strength at the place of reception, in microvolts per metre. If, now, it is desired to estimate the dependency of the receiving field strength upon the wavelength for two given points, special conditions regarding the transmitter must also be added, for example, that with a given aerial a certain number of kilowatts are available, or that the aerial is being utilised to the limit of permissible voltage. If one combines such conditions with the Austin-Cohen formula, a function is obtained which has approximately the form of curve 1 in Fig. 1.

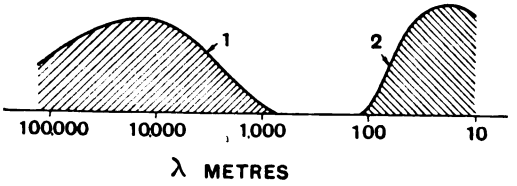

Fig. 1. *Received field strength on various wavelengths at a distance of about 6,000 kilometres.*

Now, this function is generally found to be confirmed in practice with approximate correctness. One finds in fact an optimum with certain medium wavelengths, which as a rule are about the 500th part of the distance between the two stations, that is to say, at a distance of about 6,000 km. (Nauen—New York) a wave of 12,000 metres has been found to be very satisfactory. If much longer waves are used, it is found that the strength of reception drops very considerably in consequence of reduced radiation. It is likewise found that when much shorter waves are used, there is also a greater diminution in the intensity, notwithstanding the increased radiation, this being due, as is known, to failure to bend round the globe (dispersion) on the one hand, and to absorption on the other hand. In fact wavelengths below about 1,000 metres are found to be very unsuitable for Transoceanic communications, for which reason, during the last decade, one has been enabled safely to conclude that curve 1 shown in Fig. 1 reproduces the true conditions with absolute correctness, and no technician who cared about his scientific or technical reputation would have ventured, in connection with ranges of 10,000 km. or similar ones, to speak of wavelengths far below 100 metres. And this is precisely what has now become the accomplished fact!

The discovery of the extraordinary effectiveness of these short waves was made accidentally, namely, by the fact that in the United States of North America there were allotted to amateurs, who also wished to devote their attention to transmitters, regulation wavelengths under 125 metres, regarding which it was assumed that they would not cause further interference to anybody. It was very soon found, however, that such short-wave transmissions were received at quite considerable distances, in Europe for example, whereupon the attention of all wireless technicians was immediately focused upon this remarkable phenomenon.

The question will now at once be asked how it was that so important a fact could remain concealed for so long. The explanation of this can easily be deduced from the history of wireless telegraphy.

There can be no doubt at all that the newly found good results with short waves are to be attributed solely to the era of the valve transmitter and valve receiver, since, in principle, transmission with so short waves is in no way a novelty. It should be recalled that in the early days of wireless telegraphy, Righi oscillators were used, and, as a general rule, these were of such dimensions that they were only able to give wavelengths of a few metres at the most. At least, it was the intention at that period to work with such oscillators and such wavelengths, even if, in fact, much longer wavelengths resulted when the aerial was coupled direct to the Righi oscillators.

There is no doubt that at that time the technical means available, and especially the receivers, were too inadequate for such results to be even thought of, as can now be witnessed with short waves.

A few years later, during the era of the musical note transmitter, such waves could perhaps have been conceived, from the standpoint of the transmitter. But even then no results would have been obtainable as regards reception, since there was not a fully elaborated receiving and amplification technique as would have been necessary for the purpose. The Poulsen arc and machine transmitters were quite unsuitable for the production of such short waves.

It was only after the elaboration of transmitting valves, when the production of

Digitized by Google

undamped oscillations for wavelengths down to about 1 metre was made comparatively easy. that trials with short waves were again made. In fact, it was not until about 1916 that the technical auxiliaries, such as transmitting valves of suitable output, heterodynes, and all the necessary receiving and amplification circuits were developed far enough to lead to the discovery and utilisation of the singular qualities of short waves. But meanwhile theory and experience had apparently shown unanimously that propagation over the earth is subject to the laws represented by Fig. 1, curve 1. As however this representation is absolutely correct, even now, down to about $\lambda=150$ metres, and as not even a trace of deviation or exception has ever been found, it was logically held to be correct for still shorter waves, and it would have been a waste of time to go still lower with the wavelength. Only for special purposes, such as directional transmission with reflectors at shorter distances, did the short waves seem likely to be successful and attempts were in fact often made to use them.

Special mention should here be made of the series of experiments on a large scale that were carried out by C. S. Franklin and the Marconi Company, about the year 1919 and succeeding years.[3] Nevertheless, owing presumably to the lack of other receiving observation stations for these wavelengths, these experiments did not reveal the enormous importance of short waves, although all the requisite conditions were present in the transmitting apparatus of C. S. Franklin. Even the Marconi Company's receiving stations, at the time when the fabulous ranges of short waves had been discovered elsewhere, had not yielded corresponding results, so that the fame for this discovery was lost to it in consequence of the results that had been secured accidentally by amateurs.

Therefore, when the first signs of the extraordinary ranges of short waves had been justified by observations in several quarters, interested circles directed all their energies to the elaboration of this important new branch of high-frequency technics.

The "Telefunken-Gesellschaft für drahtlose Telegraphie," which together with the "Transradio - Gesellschaft für drahtlosen Uberseeverkehr" is interested in the transmission of messages by wireless telegraphy over the greatest ranges, proceeded immediately with the study of these problems and, by building and putting into operation several valve transmitters for short waves between 100 and 10 metres, for communications between Nauen and far-distant receiving stations, such as Buenos Aires (12,000 km.), Bandoeng, Java (11,000 km.), Osaka, Japan (9,000 km.), has achieved important results and progress, and acquired extremely valuable experience. Further, in several other quarters connected with the high-frequency industry, as well as in the State laboratories of various countries, important results have been obtained and published. Furthermore, amateurs, and especially those of the United States of North America, have obtained important data on the propagation of short waves, and the effect of such variable factors, as the time of the day, time of the year, wavelength, etc. One can therefore form a provisional picture of the strange phenomena of short-wave wireless telegraphy.

Before I proceed to the chief theme of the present paper, namely, the results which the Telefunken Company in co-operation with the Transradio Company has obtained in the attempt to bridge long distances by wireless, it is necessary, for a better comprehension of the subject, to explain those physical phenomena which form the basis of the action of short waves, as contrasted with long waves, as far as they appear to be known at present.

II.—Method of Propagation.

The propagation and transmission of short waves, as compared with long waves, shows some striking differences, which have already been partly described by A. Meissner[4] and A. Esau.[5] In tfhe case of short waves, the ollowing properties are especially noticeable: Fading, *i.e.*, sudden strong fluctuations of intensity, as, for example, are represented in Fig. 12; the great differences between the day and night signal strength; the existence of suitable

[3] See, for example, under G. Marconi, *Jahrb. drahtlose Tel.*, 21, 1923, 58.

[4] A. Meissner, *Zeitschrift f. Tech. Phys.*, 5, 1924, 485.

[5] A. Esau, *Zeitschrift f. Tech. Phys.*, 5, 1924, 538.

Digitized by Google

wavelengths in the immediate neighbourhood of which very unfavourable wavelengths may lie; the variation of the favourable wavelengths with the time of the day and year, and finally the so-called dead zones. Before I go into details, it must first of all be shown how the earlier laws (curve 1, Fig. 1) have been modified by the new discoveries.

According to the results obtained up to the present, there is no doubt that, in addition to the range of wavelengths of Curve 1 in Fig. 1, there exists a further favourable range, somewhat as shown in curve 2, Fig. 1, of wavelengths of about 100 metres and below, but that between these two ranges there is a range which is useless for Transoceanic distances. That curve 2 is not given by the above-mentioned formulæ is due to the fact that the latter are only calculated for a direct transmission along the earth's surface, and that Austin's experimental results were only obtained on longer waves, whilst the effect of the short waves—as can now be maintained with the greatest certainty—is an indirect one. By this it should be understood that the short waves travel, on the one hand, along the surface of the earth, but that the energy which is measured at distances of several thousand kilometres does not proceed from a propagation along the earth's surface, but has returned from the higher layers of the atmosphere. The reasons of this assumption are justified by various experimental results of the past year.

One of the most important reasons which can now be adduced for this is the so-called "dead zone" which occurs in certain cases which are more fully described below. The strength of reception, in fact, has often a remarkable distribution around a transmitter, in that, first of all (see Fig. 2(*a*)) there is around the transmitting aerial (*S*) a zone of considerable intensity (*A*). Beyond this zone is found a second one (*B*) in which the receiving strength is exceedingly small, whilst at a certain distance a zone of increased receiving strength (*C*) is again perceptible, and this may be of enormous extent. The simplest explanation of this, then, is that zone *A* is that of direct transmission of surface waves, which the Austin-Cohen formula represents, and that these surface waves at the beginning of zone *B* have so diminished in their intensity by absorption and reflection that they can no longer be detected. A considerable amount of radiation energy has, however, directed its course obliquely upwards and, in consequence of physical conditions to be explained later, returns again to the earth, where it becomes perceptible in zone *C*.

As regards the existence of the dead zones, exhaustive statistical investigations have been reported by J. L. Reinartz[6], and also by A. H. Taylor and E. O. Hulbert.[7] Exact data regarding this are given in the latter paper, from which it appears that dead zones do not occur generally in wavelengths above 50 metres, that in the neighbourhood of 40 metres they may first of all assume breadths of about 100-200 km. and that their breadth down to a wavelength of 15 metres increases extraordinarily and may reach far beyond 1,000 km.

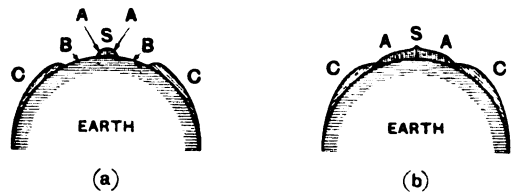

Fig. 2. *Distribution of the receiving intensity around a short-wave transmitter.*

The direct receiving zones *A*, Fig. 2(*a*), which are obtained with various wavelengths, may, depending on the conditions, vary in width from a few kilometres (occasionally estimated at less than 10 km.), to 100 or 200 km., and the direct zone is in fact probably reproduced with sufficient correctness by the original Austin-Cohen formula.

But even where there is no dead zone, there is direct as well as indirect transmission. This means that with the longer waves of range 2 (approximately 60 to 100 metres) the direct range is so large that it overlaps the zone of the indirect range.

[6] J. L. Reinartz, *Q.S.T.*, 9, 1925, No. 4, p. 9.

[7] A. H. Taylor and E. O. Hulbert, *Q.S.T.*, 9, 1925, No. 10, p. 12; A. H. Taylor, *Proc. I.R.E.*, 13, 1925, 677.

Digitized by Google

There then results, instead of the distribution shown in Fig. 2(*a*), a distribution as shown in Fig. 2(*b*), and the signal strength in a receiver, at increasing distances from the transmitter would, in the case of the distribution shown in Fig. 2(*a*), be represented by curve *a* in Fig. 3, whereas in the case of the distribution shown in Fig. 2(*b*) it would be given by curve *b*. The former (curve *a*), would, therefore, be expected with wavelengths of less than 40 metres, the latter (curve *b*) with waves over 60 metres. It would appear that the fading phenomena are especially great at those places where the direct range overlaps the indirect. On the other hand, they are in no way limited to this zone, since even at distances of 10,000 km. and over, where indisputably only the indirect rays are concerned, they are also very pronounced. A further reason for the assumption that short waves do not go

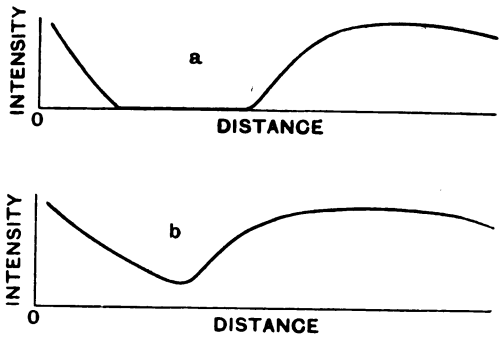

Fig. 3. *Variation of signal strength with distance of the receiver from the transmitter.*

by a direct route over great distances is the fact that when bearings are taken along the route, either they are extraordinarily lacking in sharpness or it is completely impossible to effect them, the received waves being of a muddled or diffuse character.

A very interesting discovery regarding the return of waves from the upper atmosphere has been made by E. V. Appleton[8] who found, by means of a receiving set some 150 km. distant from the transmitter, that at the respective point of reception there were both direct and indirect rays, since interference between the two could be demonstrated. He likewise found, on varying the wavelength, that there were very close maxima and minima of reception, from which he was able to deduce that there was a difference of path between the two rays amounting to about a hundred wavelengths. From the distance of the station and the different length of path (about 80 km.), he was able to conclude that the indirect ray returned from a height of 80–90 km., a height at which, from our knowledge of meteorological conditions, a considerable conductivity is extremely probable.

If we assume that the radiation returns from the upper layers of the atmosphere, the conditions for the realisation of this phenomenon must be very complex. Several explanations are possible. A simple assumption would be that the electrical waves are totally reflected at the naturally not very sharp limit between the atmosphere and the space which is either empty or interspersed with frozen gas dust. It can, therefore, be easily deduced, from the configuration of the atmosphere and the earth, that the rays in order to traverse a route such as that from Nauen to Buenos Aires *i.e.*, about 100 degrees, would necessarily undergo numerous total reflections. It is manifest that this explanation is not adequate, however, since if it were only a question of the dielectric properties of the atmosphere, there would be no reason why waves of from 100 metres up to the longest are not also totally reflected to the same extent. This would necessitate a dispersion, which is in nowise inherent in the air.

Instead of a total reflection, on passing from the air-space (atmosphere) to the empty space, one can secondly assume a reflection at the much discussed Heaviside layer, *i.e.*, a layer which, as compared with the air layers on the earth's surface, is said to possess a considerably increased conductivity in consequence of ionisation. The same here applies as has been said in the previous case, regarding the necessary manifold reflection.

The possibility both of reflection and of selective reflection for short waves of only a definite range, is here present. The physical bases of this assertion will also be discussed below when treating of the fourth

[8] E. V. Appleton, *Tidj. Ned. Rad. Gen.*, 2, 1925, 115.

Digitized by Google

possible explanation. In any case, the explanation just given is to be counted among the more probable ones, even if preference is now given to the fourth explanation set forth below.

A third possible explanation is refraction, *i.e.*, such a bending of the rays in the upper layers of the atmosphere that they follow a path parallel to the curvature of the earth, so that when the waves have once reached certain heights, they now direct their course without reflections to distant points of the earth, and the energy, less what is lost on the way, returns to the earth. The only physical prerequisite for such a curved route is that the speed of propagation in the upper air layers must be somewhat greater than in the lower ones, namely, of course, to such an extent that the curvature of radiation is approximately the same as the curvature of the earth. Here also one might at first assume purely dielectric differences. For this, the dielectric constant of the lower air layers, in comparison with that of the upper ones, would have to be greater than that actually caused by the difference of density, and one would be compelled to have recourse to the aqueous vapour in the lower layers or something similar, as has already been suggested by the above-mentioned authors. But, here again we should be in a dilemma in that we should have to assume, with a purely dielectric explanation, a dispersion of the air layers, in order to explain the extraordinary difference in the propagation of the short waves as compared with the long. This explanation seems therefore to be as little tenable as that of total reflection.

A fourth explanation is now chiefly held to be the correct one, namely, that a curvature of the wave rays takes place, therefore not reflection but refraction, and that this curvature is effected by the effective dielectric constant being diminished in the upper layers by conductivity, and the speed of propagation consequently increased. The existence of such a conductivity cannot, of course, be held to be contrary to physical laws, and it seems entirely justified to assume a "Heaviside Layer" of such conductivity, so long as nothing better is known to explain the peculiar facts. The assumption of O. Heaviside is to the effect that in the upper atmosphere there are found layers with considerable ionisation and therefore of considerable conductivity, and that the divergence of the electrical waves from the earth and their radiation into universal space is thereby prevented, and the receiving intensity is increased far beyond that given by the ordinary diffraction formula. Now, whether this conservation of radiation is effected by reflection or refraction, would probably matter but little as regards the designation "Heaviside Layer." It can in any case be maintained that the great scientist, with intuitive glance, at once realised the favourable influence of atmospheric conductivity on the propagation of electrical waves, even if his explanation should not be found to be correct to a full 100 per cent.

The assumption of a radiation curvature due to diminution of the dielectric constant of the upper layers, in consequence of conductivity, is not only capable of explaining the extraordinarily favourable ranges and the conservation of the radiation energy, but also the difference in the propagation of short waves, as compared with the long ones. Even before the discovery of the short-wave phenomenon, it had already been pointed out from many quarters that, if the effective dielectric constant of the air is lessened by ionisation or conductivity, it must become noticeable in wireless telegraphy (H. W. Eccles, J. Salpeter, B. van der Pol, etc.).[9] The assumption which has to be made regarding the density of ionisation in the upper layers, in order to obtain a suitable variation of the dielectric constant by conductivity, is exceedingly probable and agrees with what is believed regarding the ionisation produced in the upper atmosphere by ultra-violet light, Cathode rays, α rays, penetrating radiation, etc. It may, however, be further stated that such a diminution of the dielectric constant without considerable losses in the respective layers, can only take place if the ionised particles are able to follow sufficiently freely the electric field of the oscillations. An examination of these

[9] H. W. Eccles, *Proc. Roy. Soc. A.*, 67, 1912, p. 79; *Electrician*, 79, 1912, 1015; *Jahrb. Drahtl. Tel.*, 8, 1914, 253, 282. J. Salpeter, *Phys. Zietschr.*, 14, 1913, 201; *Jahrb. Drahtl. Tel.*, 8, 1914; B. van der Pol, *Dissertation*, 1920, Utrecht.

Digitized by Google

conditions has recently been made by J. Larmor,[10] who has shown that in this direction the results are quite satisfactory. As will easily be seen, the dielectric constant in the ionised air is in itself dependent upon the frequency, since the phase of the electrons in the electric field is dependent upon the frequency. According to this, the dielectric constant for the shortest waves ought to show the smallest decrease, and for longer waves a greater decrease, *i.e.*, the radiation of the shortest waves will be less curved than those of the longer waves. How far this is in accordance with the facts is not yet exactly known, but in any case A. H. Taylor and E. O. Hulbert[7] have maintained that with wavelengths shorter than 10 to 15 metres a return of the radiation from the upper atmosphere hardly takes place. In the case of waves over 15 metres one would obtain, according to knowledge gained hitherto, a sufficient curvature by the conductivity in order to be able to explain the great ranges. Furthermore, in the direction of longer waves, there is found a limit which, as is shown by Fig. 1, lies in the neighbourhood of a wavelength of about 125 metres, after which favourable propagation decreases. This is to be explained by the fact that, from these frequencies downwards, the ions and electrons respectively, in the time between two collisions with gas molecules, no longer have time to follow these relatively slow oscillations in such a way that a curvature of the ray can take place without loss, *i.e.*, for wavelengths beyond a certain value the energy not only returns towards the earth too early in consequence of greater curvature, but also is consumed by the collisions of the ions, so that large ranges cannot be obtained.

[10] J. Larmor. *Phil. Mag.*, 48, 1924, 1025. See also *Jahrb. Drahtl. Tel.*, 25, 1925, 141.

(*To be continued*).

Book Review.

THE B.E.S.A. GLOSSARY OF TERMS USED IN ELECTRICAL ENGINEERING.—Published by Crosby Lockwood & Son for the British Engineering Standards Association, pp. 263. Price 5s.

This Glossary was prepared by a Sectional Committee, a sub-Committee, and a number of panels; it was finally adopted by the Sectional Electrical Committee, which is the British National Committee of the International Electrotechnical Commission in January of the present year. The objects in view are stated to have been (*a*) to standardise and co-ordinate the electrotechnical terms used in the British Empire, and (*b*) to provide a basis for the British portion of an International Vocabulary, in course of preparation by the International Electrotechnical Commission. It is divided into eleven sections, two appendices, and an alphabetical index. Each section is subdivided into a number of sub-sections, for example: Section X., Radio Communication, is sub-divided into seven sub-sections under the following headings: Ether and Ether Waves; Aerials and Aerial Construction; Transmission; Reception; Valve Construction and Properties; Circuits and their Properties; Amplifiers and Relays. Appendix I. gives a table of symbols for quantities and units; Appendix II. classifies the contents in the order of the international decimal classification. An attempt has been made to standardise as far as possible the termination "or" for pieces of apparatus or machines for accomplishing a certain purpose, leaving the termination "er" for the person who carries out an operation, but the scheme could not be carried right through. The Committee adopted "divertor" and even "startor" but drew the line at such things as "milkor," "feedor" and "voltmetor."

The most unsatisfactory sections in our opinion are those dealing with fundamental electrostatic and magnetic terms. These appear to be very confused and we cannot understand how they reached the stage of publication. G. W. O. H.

Digitized by Google

Mathematics for Wireless Amateurs.

By F. M. Colebrook, B.Sc., A.C.G.I., D.I.C. **[510**

(*Continued from page* 563 *of September issue.*)

5. Logarithms.

(A) *Preliminary Note on Functions, and their Graphical Representation.*

ANY algebraic letter symbol can be considered to stand for any positive or negative number or fraction. Starting with some such symbol, x for instance, other numbers can be built up the magnitude of which will depend in some specified way on the magnitude of x. The number $3x+4$ is a simple instance of such a built-up number, and, being a number, it can be represented for convenience by some other single symbol, such as y. This number y is then defined by the statement (or equation)

$$y = 3x + 4$$

In such a connection the number x is termed an "independent variable," the idea being that it is at liberty to wander at its own sweet will over the whole range of magnitude.

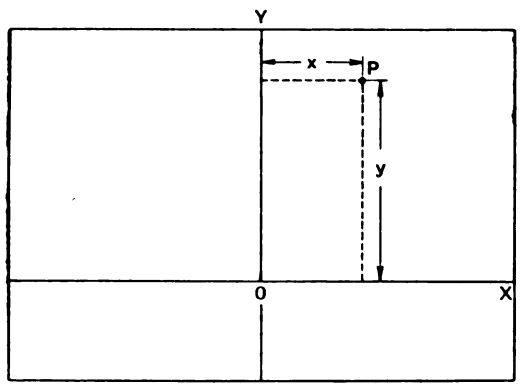

Fig. 7.

The number y on the other hand has no will of its own and has to go where x tells it. This is expressed rather grandiloquently by the phrase "y is a function of x." In mathematical shorthand this is written

$$y = f(x)$$

Notice that the letter symbol f does not in this instance represent a number, but expresses a functional relationship between y and whatever symbol is written inside the brackets. Different functional relation ships can of course be represented by other letters, *e.g.*, $F(x)$ or $\phi(x)$. Once a particular functional relationship has been specified the same letter should be used throughout any piece of work for that function.

The dependence of y upon x can be emphasised by assigning various values to x and finding the corresponding value of y. Such values can be tabulated thus:—

x	y
—2	—2
—1	1
0	4
1	7
2	10

An extensive set of tables could be drawn up in this way, but such tables would not reveal the distinctive character of the dependence of y on x. This, however, can be made quite clear by means of a method of graphical representation invented by the philosopher Descartes while he was lying in bed one morning (which just shows the unwisdom of too early rising).

Draw two lines OX and OY at right angles (Fig. 7). Any related pair of numbers x and y can now be represented by a point such as P, which is situated x units of length perpendicularly to the right (if x is positive) or left (if x is negative) of OY, and y units of length perpendicularly up (if y is positive) or down (if y is negative) from OX. (There is no need for the units of length to be the same in the two directions.) The numbers x and y are called the "co-ordinates" of the point P, which can be referred to as the point (x,y).

Digitized by Google

In Fig. 8 are shown all the points represented by the pairs of numbers listed in the above table. A new aspect of the matter is at once revealed. All the points are seen to lie on a straight line. Moreover, it will

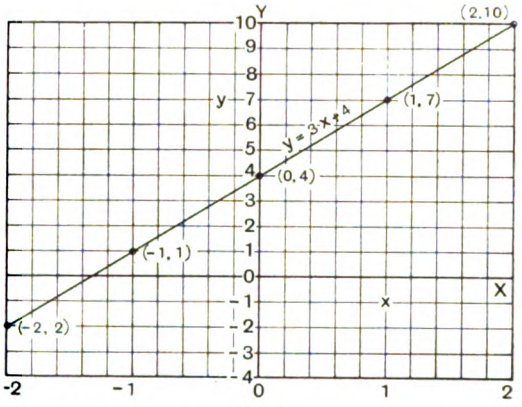

Fig. 8.

be found that any other related numbers belonging to this set will give rise to points which also lie on this straight line. The straight line can therefore be regarded as a complete representation of the function

$$y = 3x + 4$$

since all the points of the function will be found somewhere on this line. Conversely, any point on the line satisfies the functional relationship, and the value of y for any given value of x could be read off the diagram or a suitable extension of it. For $x = 1.7$, for instance, the corresponding value of y is seen to be 9.1.

The idea of functional form can now be described. There is no special magic about the numbers 3 and 4 in the above function, so it is inherently probable and is true in fact that any other pair of numbers a and b would give rise to a similar picture for the function, *i.e.*, a straight line. The function

$$y = ax + b$$

is for this reason called a straight line function of x.

Obviously much more complicated numbers than this could be built up out of x and other constant numbers. For instance

$$y = 3x^2 + 4x + 5$$

or more generally

$$y = ax^2 + bx + c$$

The points of any such function for given values of a and b could be similarly plotted on a diagram as in the above simpler case. It would be found that the points do not lie on a straight line for this rather more elaborate function. Nevertheless by plotting a sufficiently large number of points close together a dotted line will be produced through which a smooth curve can be drawn, and it will be found that any other points of the function within the range of the diagram will lie on or very close to this curve, and the greater the number of points calculated and plotted, the more nearly will any other points be found to lie on the curve.

(B) *The Exponential Function.*

The above is no more than a very brief introduction to the idea of functions and their graphical representation. From this point there will be considered a particular function closely related to the subject matter of Section 4, namely

$$y = a^x$$

where a is some constant number.

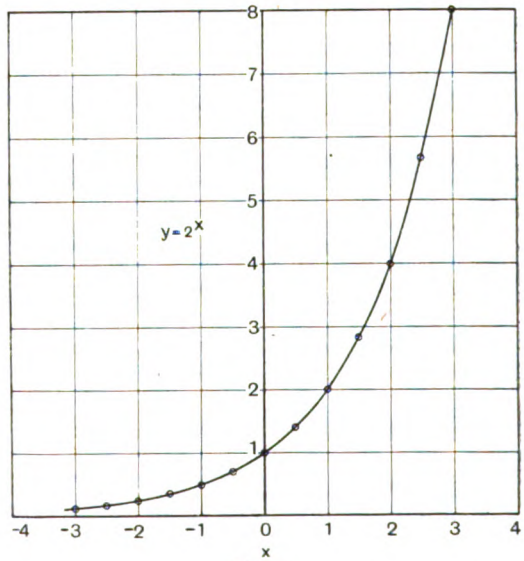

Fig. 9.

To fix ideas, let a have some simple value, such as 2. That is

$$y = 2^x$$

The first thing to notice is that x can have

Digitized by Google

any positive or negative fractional or integral value, for the significance of such a general index has been determined. For instance, if $x = .5$

$$y = 2^{.5} = 2^{\frac{1}{2}} = \sqrt{2} = 1.414$$

and if $x = -.5$,

$$y = 1/x^{.5} = 1/1.414 = .707$$

Proceeding in this way, it will be possible to draw up a table of related values of x and y covering any desired range. For instance,

x	y	x	y
—3.0	.125	1.0	2.00
—2.5	.177	1.5	2.83
—2.0	.250	2.0	4.00
—1.5	.355	2.5	5.66
—1.0	.500	3.0	8.00
0	1.00		

These and similar values can be plotted on a diagram and a curve drawn. The curve is shown in Fig. 9.

From such a curve any other corresponding pair of numbers within the given range can be determined fairly accurately (to about 1 per cent. or so). For instance, for the point on the curve for which $y=4.8$, x is seen to be 2.26, so that

$$4.8 = 2^{2.26}$$

(This illustrates a very useful application of the graphical representation of functions. Given that

$$4.8 = 2^x$$

the determination of x by any method of direct calculation would be a troublesome business, and would puzzle most people.)

Theoretically the above curve could be extended indefinitely beyond the limits shown in either direction, and it would be found to be a smooth continuous curve. This means that for any finite value of y it will be possible to find a value for x such that

$$y = 2^x$$

There is no special magic about the number 2 which has been used for a in these calculations, and it may therefore be said that in general, for any finite positive value of a, and any finite value of y, it will be possible to find a value for x such that

$$y = a^x$$

[Notice that a must be positive. The reader is recommended to try to tabulate a set of related values for y and x similar to the above for

$$y = (-2)^x$$].

(c) *Logarithms.*

When x, y, and a are so related that

$$y = a^x$$

x is called the logarithm of y to the base a, and is written

$$x = log_a y$$

The two statements

$$y = a^x$$

and

$$x = log_a y$$

therefore mean the same thing. The number corresponding to a given logarithm is called the antilogarithm of the given logarithm. Thus in the above y is called the antilogarithm of x. (These, by the way, are the full ceremonial titles. Log and antilog are what one actually says.)

Having now shown that the logarithm of any number to the base a exists, and having indicated the possibility of determining it by simple arithmetic and drawing, it will be assumed that there is available a set of tables or curves recording the logarithm of all numbers to the given base a, the intervals between whole numbers being subdivided to any desired degree of fineness. For reasons to be given later, 10 is the base chosen in practice, and tables of logarithms and antilogarithms to the base 10 are easily obtainable. What, now, is the use of such tables?

Suppose it is required to find the product of two numbers y_1 and y_2. The logarithms of these numbers can be found in the tables. Call them x_1 and x_2. Then

$$y_1 = a^{x_1}$$

and

$$y_2 = a^{x_2}$$

so that

$$y_1 \times y_2 = a^{x_1} \times a^{x_2} = a^{(x_1+x_2)}$$

Digitized by Google

This means that (x_1+x_2) is the logarithm of $(y_1 \times y_2)$, or that $(y_1 \times y_2)$ is the antilogarithm of (x_1+x_2). To find the product $(y_1 \times y_2)$, therefore, it is only necessary to find the logarithms of y_1 and y_2, add these together and find the antilogarithm of this total. For instance

$$\begin{aligned} log_{10}\, 3.412 &= .53300 \\ log_{10}\, 796 &= 2.90091 \\ \text{Sum} &= 3.43391 \\ antilog &= 2715.8 \end{aligned}$$

Therefore

$$3.412 \times 796 = 2715.8$$

Thus multiplication is reduced to a simple operation of addition. In a similar manner, division can be simplified to subtraction, for, by an obvious modification of the above proof it can be shown that

$$log\, a(y_1/y_2) = log_a y_1 - log_a y_2$$

Thus to divide 796 by 3.412,

$$\begin{aligned} log_{10}\, 796 &= 2.90091 \\ log_{10}\, 3.412 &= .53300 \\ \text{Difference} &= 2.36791 \\ antilog_{10} &= 233.29 \end{aligned}$$

Therefore

$$796/3.412 = 233.29$$

Again, since

$$log_a(y_1 \times y_2) = log_a y_1 + log_a y_2$$

it follows that

$$log_a(y_1 \times y_2 \times y_3 \ldots\ldots y_n) = log_a y_1 + log_a y_2 + log_a y_3 \ldots\ldots log_a y_n$$

and if

$$y_1 = y_2 = y_3 = y_4 \text{ etc.} = y$$

this becomes

$$\begin{aligned} log_a(y \times y \times y \ldots\ldots n \text{ factors}) &= log_a(y_n) \\ &= log_a y + log_a y + log_a y \ldots\ldots n \text{ terms} \\ &= n \times log_a y. \end{aligned}$$

Thus a number can be raised to any integral power by simple multiplication. For instance

$$\begin{aligned} log_{10}\, 3.412 &= .53300 \\ log_{10}\, 3.412^5 &= 5 \times .53300 = 2.66500 \\ antilog_{10}\, 2.66500 &= 462.38 \end{aligned}$$

Therefore

$$3.412^5 = 462.38$$

Furthermore, the general formula

$$log_a y^n = n \times log_a y$$

proved above for an integral index, is true also for a fractional index. Let $n = p/q$, where p and q are integers. Then by the definition of a fractional index,

$$(y^q)^{\frac{p}{q}} = y^p$$

Therefore

$$log_a (y^q)^{\frac{p}{q}} = log_a y^p = p \times log_a y$$

But

$$log_a (y^q)^{\frac{p}{q}} = q \times log_a (y^{\frac{p}{q}})$$

Therefore

$$q \times log\, (y^{\frac{p}{q}}) = p \times log_a y$$

or

$$log_a (y^{\frac{p}{q}}) = (p/q) \times log_a y$$

In particular the nth root of any number can be calculated by logarithms, for

$$\begin{aligned} log_a \sqrt[n]{y} &= log_a y^{\frac{1}{n}} \\ &= (1/n) \times log_a y \text{ or } (log_a y) \div n \end{aligned}$$

Thus, to find the fifth root of 796,

$$\begin{aligned} log_{10} 796 &= 2.90091 \\ log_{10} \sqrt[5]{796} &= 2.90091 \div 5 \\ &= .58018 \\ antilog_{10} &= 3.8037 \end{aligned}$$

Therefore

$$\sqrt[5]{796} = 3.8037$$

Here an arithmetical process which is too complicated to be admitted into ordinary text-books is reduced to a simple matter of division.

The full advantage of the logarithmic method of calculation is seen in the determination of a more or less complicated number such as

$$y = \frac{2.43^3 \times 191 \times \sqrt[2]{347}}{\sqrt[4]{1.519^3}}$$

The determination of this by direct calculation would be a weariness to the flesh, for which weariness the flesh would probably retaliate by slipping into error. Logarithmically, however, the calculation is simplified to

$$\begin{aligned} log_a y = 3 \times log_a 2.43 &+ log_a 191 \\ &+ \tfrac{1}{2} log_a 347 - \tfrac{3}{4} log_a 1.519 \end{aligned}$$

The whole of the foregoing propositions with regard to the application of logarithms are independent of the particular base to which the logarithms are referred. The choice of the base to be used in practice is

Digitized by Google

merely a matter of convenience. As stated above the base 10 is actually used for the following reason. Any whole number or decimal can be expressed as some number between 1 and 10 multiplied by some power of 10. For instance

$$.143 = 1.43/10 = 1.43 \times 10^{-1}$$
$$3179.8 = 3.1798 \times 1000 = 3.1798 \times 10^{3}$$

and so on. Thus any number can be expressed in the form

$$y \times 10^{n}$$

where n is a positive or negative integer and y is some number or fraction between 1 and 10. Now

$$\log_{10} y \times 10^{n} = \log_{10} y + \log_{10} 10^{n}$$
$$= \log_{10} y + n$$

Thus all that is needed in a table of logarithms to the base 10 are the logarithms of all numbers between 1 and 10, subdivided decimally to any desired degree. (Five figures are generally quite sufficient for experimental work.) Such logarithms will all lie between 0 and 1, *e.g.*,

$$\log_{10} 2 = .30103$$

The whole number to be placed in front of the decimal point will be n, determined as shown above. Thus $\log_{10} 200$ would be 2.30103, and $\log_{10} .002$, *i.e.*, $\log_{10} 2 \times 10^{-3}$ would be $\bar{3}.30103$. In practice the negative sign is put as a bar over the whole number, as in this example, to show that it refers only to the whole number and not to the decimal part which follows. It is more convenient to keep the decimal part positive. Thus $\bar{2}.30103$ is the same as $(-2+.30103)$, *i.e.* (-1.69897), but the first form is always used in computation.

Logarithms calculated to the base 10 are called Common Logarithms, and the base is not expressed. Thus if no other base is specified, it is always assumed to be 10.

There is another set of logarithms which is in occasional use. These are calculated to the base 2.71828, for which apparently arbitrary number the symbol e or the Greek ϵ is always used. There is method in this apparent madness. So much so, in fact, that such logarithms are called "natural logarithms," though at first sight nothing could appear less natural. The natural logarithm of y is written $\log_{\epsilon} y$. Actually the use of this other system of logarithms will not necessarily involve a new set of tables, for a logarithm to any one base can be readily converted to the logarithm to some other base in this way. Suppose

$$\log_a y = m$$
$$\log_b y = n$$

i.e.,

$$y = a^{m} = b^{n}$$

Suppose further that the logarithm of b to the base a is k,

i.e.,

$$b = a^{k}$$

Then

$$y = b^{n} = (a^{k})^{n} = a^{kn}$$

and since also

$$y = a^{m}$$
$$m = kn$$

so that

$$\log_a y = \log_a b \times \log_b y$$

In particular

$$\log_{\epsilon} y = \log_{\epsilon} 10 \times \log_{10} y$$

and since $\log_{\epsilon} 10$ is a constant number (2.3026) the conversion reduces to

$$\log_{\epsilon} y = 2.3026 \times \log_{10} y$$

i.e., Natural Log. = Common Log. × 2.3026.

If the foregoing description of logarithms and their application is thoroughly understood, the reader should have no difficulty in using this method of computation. It does not pretend to be a complete set of working instructions for the manipulation of log tables, but if the theory is really appreciated, the reader should be able to follow the detailed instructions which are generally included with any such tables. (To guard against any misconception on this point, it should be made clear that the tabulated logarithms found in the usual published tables have not actually been determined by the method described in this article, which would not be nearly accurate enough. The actual method of calculation will probably be encountered later in this series.)

Finally, one practical point. The logarithmic method can only be applied to any expression which consists exclusively of products, quotients, and powers. Therefore, before setting out on any series of calculations it is well to arrange them as completely as may be in a form suitable for logarithmic computation. An instance

Digitized by Google

which may frequently occur in connection with alternating current problems is the difference of two squares, *i.e.*, $a^2 - b^2$, where a and b have certain specified numerical values. The form $a^2 - b^2$ is not suitable for the use of logarithms, but, as already shown (see Examples, p. 450, July issue),

$$a^2 - b^2 = (a - b)(a + b)$$

and the form on the right hand side, consisting of the product of two factors, is better adapted for calculation. For example,

$$874^2 - 27.8^2 = (874 - 27.8)(874 + 27.8) = 846.2 \times 901.8$$

No general rules can be laid down, but the exercise of a little ingenuity in this matter will often save a great deal of time and labour.

Examples.—Logarithms.

1. Given that $log 2 = .30103$, show that $log 5$ is .69897.

2. $Log 3 = .4771$. Show that

$$log 1/3 = 1.5228$$
$$log\ 81 = 1.9084$$
$$log 3^{\frac{1}{3}} = .5228$$
$$log 3^{30} = 14.313$$

3. What are the whole numbers in the logs of 21, .021, 99918, .00073?

4. Show that 2^{100} is a whole number of 301 figures.

5. Show that $log\,(log 10^{10^x}) = 1 + x$.

6. Show that $log_a 1 = 0$ for all finite values of a.

(To be continued.)

Note on a System of Atmospheric Elimination.

By S. Butterworth. **[R431**

(Admiralty Research Laboratory, Teddington.)

IN a recent patent specification* M. L. Levy has described a circuit which is intended to eliminate atmospheric or similar parasitic shock excitations. Some eight years ago the present writer had occasion to study a very similar circuit which had been suggested to him for the same purpose, and came to the conclusion that a circuit of this type was incapable of eliminating disturbances due to shock excitation of any kind.

As the circuit has been once more put forward, and as the arguments in its favour seem very plausible, it may be of interest to your readers to point out why it does not eliminate atmospheric disturbances, and why it is inefficient in regard to increasing selectivity between two continuous wave signals.

The circuit in question is essentially as shown in the figure. Two resonant circuits, I and II, receiving equal E.M.F.s from the required station, are slightly detuned, so that I resonates at a frequency slightly above, and II at a frequency slightly below, the frequency of the incoming signal. Because of the rapid reversal of phase as we

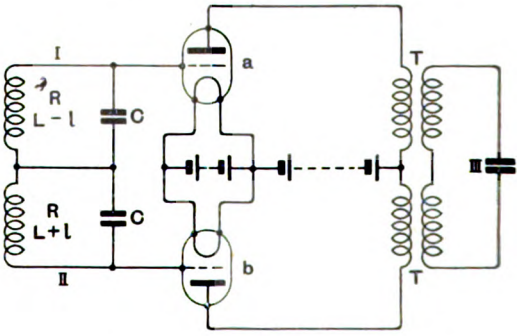

pass through resonance, it is clear that for any frequency in the band lying between the resonances of I and II the potentials of the grids of the valves a and b will tend to be in antiphase, while for any frequency outside

* British Patent No. 225,570, described in *E.W. & W.E.*, June 1926, p. 398.

Digitized by Google

this band they will tend to be in phase. Hence, if we couple the anode circuits of these valves to a third resonating circuit III, which is tuned to the required signal, we can so arrange that while the induced E.M.F.s in circuit III. due to the wanted signal, are helping, those due to unwanted signals are in opposition. From this argument it appears, therefore, as if we can eliminate everything but the required signal.

We will first deal with the fallacy in the reasoning when the unwanted disturbance is due to shock excitation. A little consideration will make it clear that when a resonant system is subject to shock, the resulting disturbance does not merely repeat the shock, but there is also set up a damped oscillation having the same period as that of the resonant system. In the case of sound, of course, this principle is made use of in the construction of all stringed instruments. Thus in the case of the present circuit system we see that an atmospheric disturbance will cause circuits I and II to "ring" each at its own frequency. Hence, the net E.M.F. induced in circuit III by an atmospheric will consist of two damped E.M.F.s of slightly different frequencies, and these, by virtue of their rapid alternation in relative phase from assisting to opposing, will produce a damped beating effect in circuit III. This effect will have longer and longer duration as the efficiency of the circuits I and II is increased. The circuit is thus useless in so far as elimination of atmospheric disturbances is concerned.

We now consider the selectivity of the circuits in regard to continuous waves. Let the circuits I and II have equal capacities C, equal resistances R, and inductances $L-l$ and $L+l$ respectively. Let similar E.M.F.s, each of value E, be impressed on the circuits, the frequency being $\omega/2\pi$. Then, assuming equal transformers T linking the valves with the circuit III, and taking the common overall voltage amplification (valve+transformer) as m, the net E.M.F. impressed on circuit III is

$$E_c = \frac{mE}{j\omega C}\left[\frac{1}{R+j\left\{\omega(L-l)-\frac{1}{\omega C}\right\}} - \frac{1}{R+j\left\{\omega\,(L+l)-\frac{1}{\omega C}\right\}}\right]$$

$$= \frac{mE}{j\omega C}\cdot\frac{2j\omega l}{\left[R+j\left\{\omega(L+l)-\frac{1}{\omega C}\right\}\right]\left[R+j\left\{\omega(L-l)-\frac{1}{\omega C}\right\}\right]}$$

the usual vector notation having been employed.

Hence the R.M.S. value of the E.M.F. is

$$(E_c) = \frac{2(mE)l}{C\sqrt{\left[R^2+\left\{\omega(L+l)-\frac{1}{\omega C}\right\}^2\right]\left[R^2+\left\{\omega(L-l)-\frac{1}{\omega C}\right\}^2\right]}}$$

If we are concerned only with stations of slightly different frequency, the quantity under the square root sign is the only one which changes appreciably with ω. But if we had employed the same circuits I and II on the input and output sides of a single valve, using a weak coupling on the output side, the frequency variation of the system would be governed by the same factor. It is concluded that the same circuit material could be used to give the same C.W. selectivity in a far more efficient manner without departing from common practice. In addition the small factor l occurring in the numerator of the expression for the E.M.F., acting on circuit III, reduces the intensity of the required C.W. signal, while in the case of the atmospheric disturbances it merely governs the rapidity of the beats. This consideration immediately shows that the system increases, instead of diminishing, the relative importance of the atmospheric disturbances.

Digitized by Google

The National Radio Exhibition. [R064

Review of Components and Accessories of Special Interest to our Readers.

AFTER a careful examination of the new apparatus to be seen at the first National Radio Exhibition held this year at Olympia, one is ready to admit that the wireless industry has already passed through its infancy. There has probably been more real progress made in the design of broadcast receivers and their associated components and accessories during the past twelve months than during any other year since broadcasting commenced. It must not be thought from these remarks that apparatus embodying fundamentally new ideas has been evolved, but progress has essentially been made in regard to refinements in design which are the outcome of a better understanding of the underlying principles.

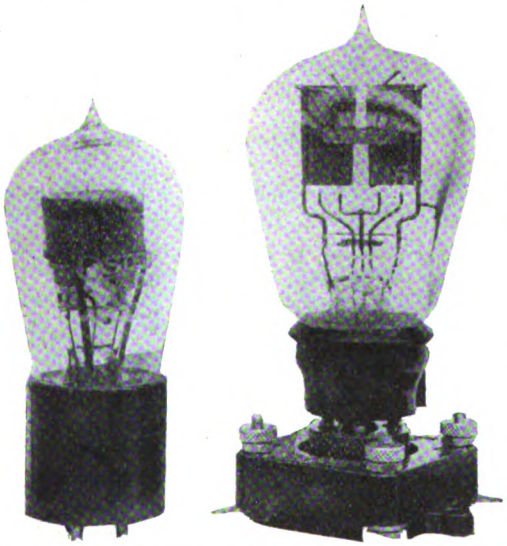

Osram gas discharge tube giving full wave rectification for use in an A.C. mains battery eliminator.

The Osram U5 full wave rectifier.

The New Valves.

Many new valves have been introduced specially designed to suit the requirements of various amplifying circuit arrangements, as well as others for use in connection with rectifying equipment. In the 2-volt group of Mullard PM valves there are now three types, the PM1 H.F., PM1 L.F., and the PM2. Each of these valves is operated with a filament potential of 1.8 volts, the PM1 type passing a current of 0.1 ampere and the PM2 0.15 ampere. The high impedance PM1 H.F. has an amplification factor of 13.5 with an impedance of 20,000 ohms, showing the mutual conductance to be 0.48mA per volt. The low impedance L.F. valve has an amplification factor of 8.9 with an impedance of 18,000, the mutual conductance being 0.5mA per volt. The PM1 H.F. is suitable for use in high-frequency and resistance-coupled amplifiers, and the PM1 L.F. is intended for transformer-coupled low-frequency stages, whilst the PM2, which has an

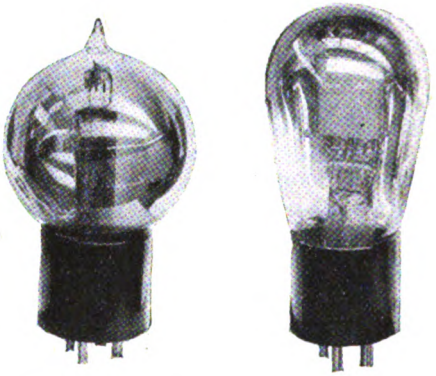

B.S.A. power valves types P425 and P612.

amplification of 5.4 with an impedance of 8,750, is suitable for the last L.F. stage where a larger grid bias is required.

Another new Mullard valve is the DP425 which is a dull filament power amplifier, and especially designed for use with loud-speakers. The filament requires 0.25 ampere at 3.8 volts, and it has the very low impedance of 3,500 ohms with an amplification of 3.15, giving a mutual conductance of 0.9mA per volt, with an anode voltage of 100. The available grid swing is approximately 30 volts,

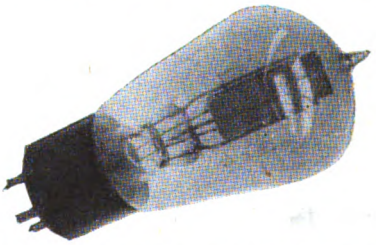

Burndept rectifying valve type U695 for charging H.T. accumulators from A.C. supply.

so that a grid bias of at least 15 volts can be used. With this grid swing of plus or minus 15 volts and a mean anode current of 12 milliamperes at 100 volts, the largest loud-speakers can be operated with a minimum amount of distortion.

Two new valves have been added to the Cosmos short path series, the SP55R and the SP55B. The former is a power valve having an impedance of 3,500 ohms with an amplification factor of 6,

Digitized by Google

giving an exceptionally high mutual conductance of approximately 1.7mA per volt. The filament voltage is 5.5 and the current is 0.25 ampere. The new SP55B is a moderately high impedance valve having the exceptionally high amplification factor

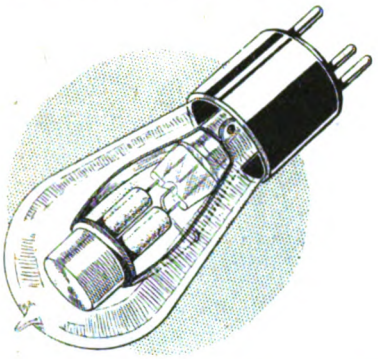

The Burndept Ethotron gas discharge rectifier for use in an A.C. battery eliminator.

of 35 and a mutual conductance of 0.65mA per volt, the impedance being 55,000 ohms.

Amongst the range of "Cossor" valves should be mentioned three of the type which are of recent construction. These are 2-volt valves, designed as detector, H.F. amplifier, and for power use

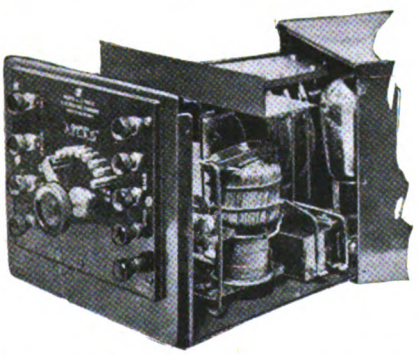

The Atlas full-wave rectifier for obtaining H.T. supply from alternating current mains. Grid biasing potentials are also provided.

respectively. The power valve filament takes .15 ampere and the detector and H.F. valves .1 ampere. A point of interest in the construction of these valves is the shock-proof filament suspension system. The filament is arched and is held in position by a fine wire but is not under tension as is the case with other types. It is claimed that as a result the filament will withstand shocks without risk of breakage.

B.S.A. Radio, Ltd., have now entered into the field of valve manufacture. A number of new valves with heavy strip filaments operating at low temperatures were shown. The type P425 is a power valve with a 4-volt filament consuming 0.25 ampere and capable of handling large input voltages with a moderate high tension potential. The impedance is given as 5,000 to 7,000 ohms with an amplification factor of 6.4 to 6.8. Another new valve, the PE612, has very similar characteristics, and is fitted with a filament consuming only 0.12 to 0.14 ampere at approximately 6 volts. Like the new type Mullard valves, the B.S.A. Standard valves (produced jointly by B.S.A. Radio, Ltd., and Standard Telephones & Cables,

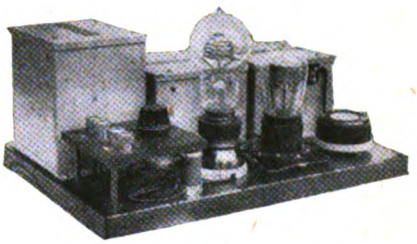

G.E.C. battery eliminator fitted with gas discharge full-wave rectifier and neon lamp.

Ltd.) are fitted with pins of unusual construction. A slot is cut through the pin not quite reaching to the ends so as to give a slight expansion about the middle and produce a reliable spring contact with the socket.

Among Marconi and Osram valves those of special interest are designed for use as rectifiers in H.T. battery eliminators. For single-phase rectification the U4 has been produced, which is a two-electrode dull emitter, operated at an applied A.C.

Burndept Ethopower A.C. unit.

voltage to the anode of 220 volts maximum (R.M.S.). For biphase rectification the U5 is available, which is fitted with a dull emitting filament rated at 5 volts 1.6 amperes. This valve will withstand an applied anode voltage of 250+250 (R.M.S.)

Digitized by Google

maximum, and will provide a direct current up to 50 milliamperes.

A new single-wave rectifying valve has been produced by Burndept intended particularly for use in charging high tension batteries from alternating supply mains. It is styled the U695, passing

Single-wave rectifier for charging H.T. batteries from A.C. supply.

a current of 0.95 ampere at 6 volts and is capable of being used for charging accumulator batteries up to 120 volts with a maximum charging rate of 60mA.

Full Wave Gas Discharge Rectifiers.

Gas discharge rectifying valves have been produced by both Osram and Burndept for use in apparatus for obtaining D.C. supply from A.C. mains. They are full-wave rectifiers and possess the outstanding merit that they can be overrun and having no filament will give prolonged service.

Fellophone A.C. battery eliminator.

Valves of this type become heated in operation, while compared with the thermionic rectifier give a wave form that necessitates the use of large reservoir condensers in the smoothing equipment.

Conspicuous at the Exhibition was the variety of battery eliminating sets for use on A.C. and D.C. supply.

A.C. Battery Eliminators.

The Atlas H.T. battery eliminator produced by H. Clarke & Co., of Manchester, is designed to provide full-wave rectification with the use of either half or full-wave rectifying valves. Its power transformer is of large size with obviously good insulation between the sections, mid-point

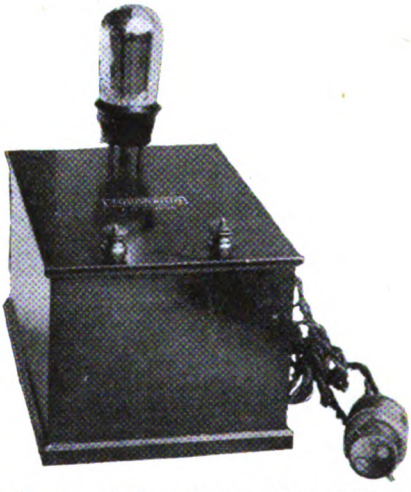

The half-wave single output rectifier of Tudoradio Co., Ltd.

tappings being provided at both output windings. Mullard DU5 or DU10 valves are used as rectifiers and smoothing is accomplished by the usual chokes and condensers though it is interesting to note that both open and closed core chokes are

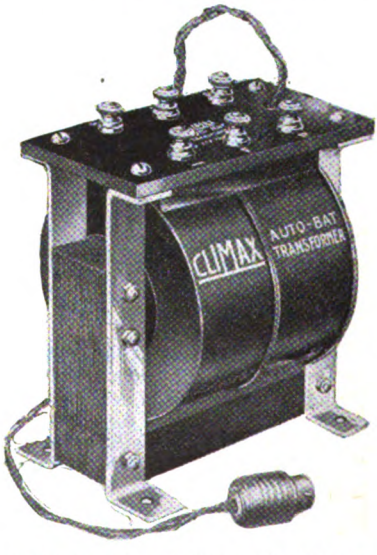

Climax power transformer for use in the construction of battery eliminators.

Digitized by Google

fitted and series connected. Several voltage outputs are produced by shunting the rectified output across a potentiometer and two fixed tappings are made to give approximately 60 and 150 volts. A third output voltage is controlled

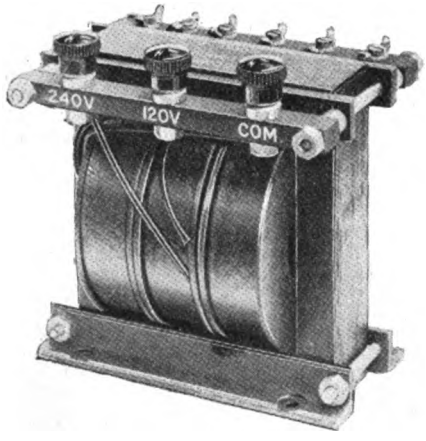

The Marconiphone power transformer with tapped primary so that it can be used on 100/120 volt or 200/240 volt supply.

by a multi-contact switch which gives any potential in small steps up to the maximum of 150 volts. Four taps are also provided to give grid biasing potentials of 4, 8, 12 and 16 volts. The entire outfit is accommodated in a steel box.

The General Electric Company also produce battery eliminators for use on A.C. and D.C.

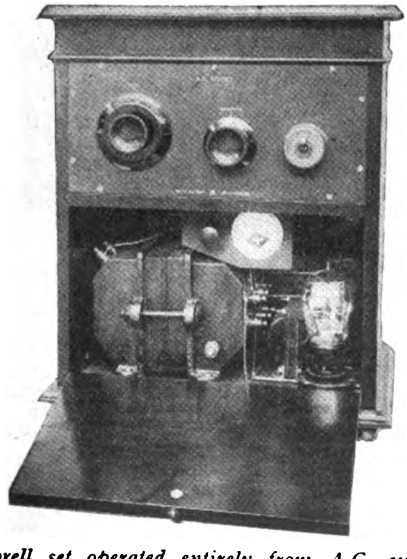

Gambrell set operated entirely from A.C. supply. The filaments which pass a current of 0.06 ampere are series connected.

mains, though it is the A.C. instrument that is of particular interest as it makes use of a full-wave gas discharge rectifying valve. Owing to the particular wave-form obtainable with this type of rectifier a very liberal smoothing equipment is necessary which is augmented in this instance by the use of a neon tube the non-uniform conductivity, properties of which assist in providing a smooth output.

The Ethopower H.T. unit of Burndept also makes use of a gas discharge rectifier and includes a very

Cable H.T. unit for use on D.C. supply. A single variable output is obtainable.

liberal smoothing equipment. To provide more than one voltage output a lead is taken from the maximum voltage terminal and the potential is dropped through a resistance shunted with a by-pass condenser.

Although the use of rectifying equipment suggests the entire elimination of H.T. primary or secondary batteries there are many who would prefer to retain their accumulator source of H.T. supply. For use on A.C. mains Burndept Wireless, Ltd., offer a useful unit which will provide the necessary slow charging rate making use of a thermionic valve rectifier. A pilot lamp according to its brightness indicates the value of the charging current, a visible glow being obtained at 35 mA.

Among the many battery eliminators making use of half-wave rectifiers are the units made by the Fellows Magneto Company and the Tudoradio Company. The particular merit of the Fellophone high tension unit is that in overall shape and dimensions it can replace a dry cell high tension battery.

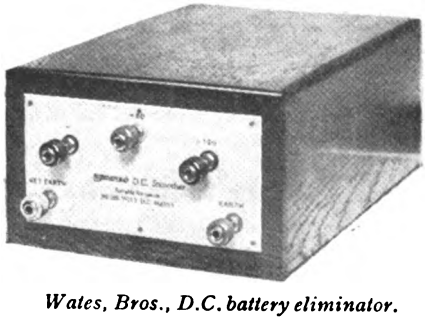

Wates, Bros., D.C. battery eliminator.

Digitized by Google

A number of parts are available for the construction of battery eliminators working from A.C. supply, the power transformer being the component which it is not always convenient to construct. Both Climax Radio Electric, Ltd., as well as the Marconiphone Co., Ltd., have produced suitable transformers for use in full-wave rectifying

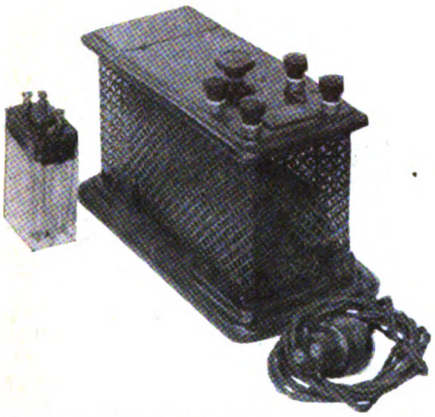

The Rectalloy electrolytic battery charger for 2, 4 or 6-volt L.T. accumulators.

circuits supplying both filament and anode potentials. The anode circuit winding of the Marconiphone transformer is intended to give 160+160 volts, whilst the transformer is tapped so that it can be used on voltages between 100 and 240.

Other auxiliary apparatus for use in battery eliminator construction includes the "Climax" smoothing choke and potential divider, the latter being wire wound to a resistance of 20,000 ohms and tapped in ten sections.

Ecko mains unit giving one fixed and two adjustable output potentials.

Deriving Filament Supply from A.C.

The incorporation of a battery eliminator in a receiver is carried out by Gambrell Bros., the set being of special interest, for both filament heating as well as anode current supply are obtained from A.C. mains. The rectifier makes use of an Osram U5 type valve, the filaments of the receiving valves being series-connected and heated from the rectified output. This arrangement is entirely new and is of special interest particularly as it is used with sets fitted with 1, 2, 3 or 4 valves.

D.C. Potential Dividers.

Battery eliminators for use with D.C. supply have been produced by many manufacturers, and consist essentially of a resistance bridging the main leads as a potential divider, the output being smoothed with the aid of condensers as well as chokes in some instances.

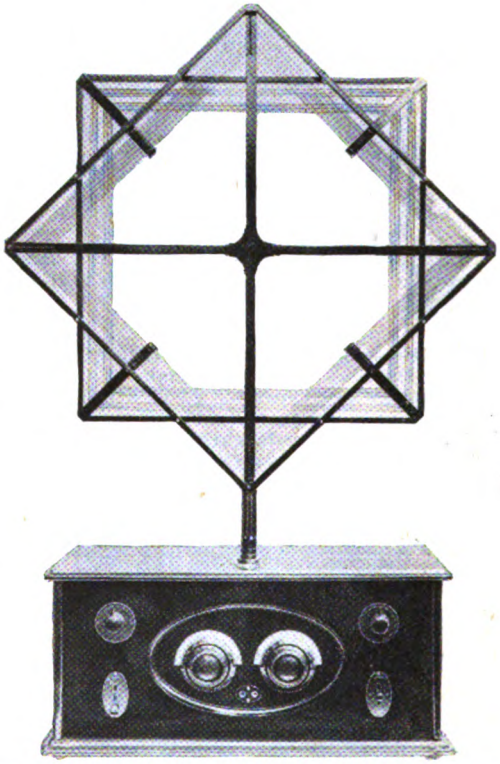

Ethodyne seven-valve superheterodyne receiver. The double wound frame is to eliminate long wave interference.

In several of the models provision is also made for obtaining grid biasing potentials, though in such cases it is essential in order to eliminate mains noise to entirely free the grid circuit of ripple. In a well-designed D.C. eliminator, however, fluctuations of potential in the grid circuit may be used to compensate for fluctuations of anode potential. Voltage regulation by means of series resistances are to be found in some of the D.C. sets, and variable high resistances are sometimes fitted to provide a critical control of H.T. potential, so that the voltage drop can be regulated according to the resistance of the anode circuit.

Digitized by Google

Almost every manufacturer of complete sets has produced a portable receiver, in many cases incorporating batteries and loud-speaker. The majority of these sets are superheterodynes, and it is interesting to consider the circuit arrangements adopted.

Superheterodyne Designs.

There were at least twenty superheterodyne sets shown, and only in a single instance was the detector valve arranged to function also as an oscillator. The use of a separate oscillator valve seems to have become standard practice.

As to the intermediate amplifier, there is a tendency to employ only two high-frequency stages, while in many of the sets transformers having iron cores are used. It was not easy to examine the internal construction of these transformers, though it would appear that in no single

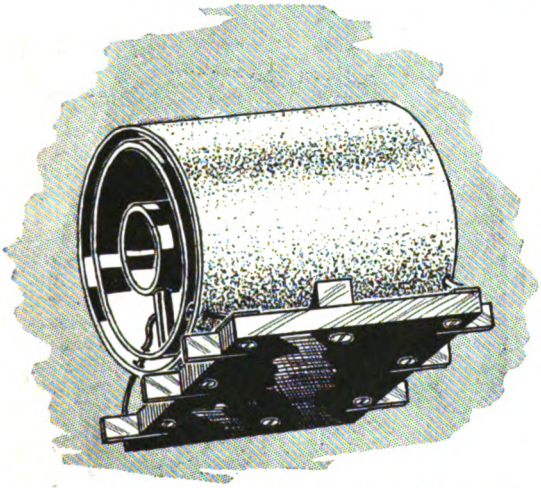

Interchangeable oscillator coupling unit fitted to the B.S.A. standard superheterodyne.

instance was the iron core completely closed. Several of the couplings were wound in grooved spools and fitted with cores of iron wire. It would seem that transformers are matched not by individual adjustment, but by manufacturing so that the windings are physically identical. Although it was suggested in some instances that matching was effected by adjusting the windings, and in others by altering the amount of iron used for the core, it would seem that both of these methods are rather inapplicable when the windings are subsequently enclosed in a metal screening box. In order that the spools may be of identical inductance, machine methods of winding have been adopted in one or two instances in preference to running on the required number of turns into a given space. No information is available as to the winding ratios, though it would seem from the space occupied by the windings that step-up ratios, perhaps as high as four to one, had been adopted.

Many new features of outstanding merit will be found in the Ethodyne intervalve couplings. In this set, two stages provide the required amplification, and the so-called filter circuit is abandoned, both stages being designed to tune over the required, though limited, frequency band.

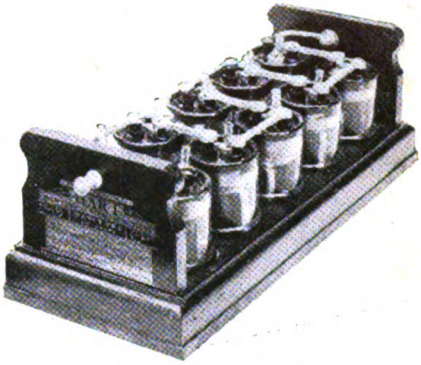

20-volt Hart H.T. accumulator unit.

Stabilising the intermediate amplifier is invariably carried out by means of a grid potentiometer, excepting in the well-known Igranic set where stability is produced by neutralising stray capacities. By using suitable valves and correctly designed transformers, higher amplification per stage is now being obtained, with the result that in many of the sets only two intermediate stages have been employed. The majority of the sets made use of frame reaction, and as regards L.F. amplification there is a trend towards using a resistance-coupled stage followed by a second, which is transformer coupled, a switch being sometimes provided for cutting out the resistance amplifier.

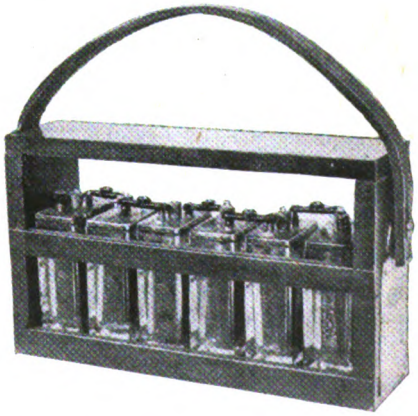

Ediswan "Hylo" 12-volt H.T. section.

Many of the superheterodynes were tunable only over the broadcast band, though in the sets shown by L. McMichael Ltd., and the B.S.A. Radio, interchangeable oscillator coupling units

Digitized by Google

were fitted. As to tuning the frame, the G.E.C. set includes a multi-contact switch which adds the necessary loading and at the same time changes over the connections to the oscillator so that the wavelength of 300 to 3,000 metres is continuously covered.

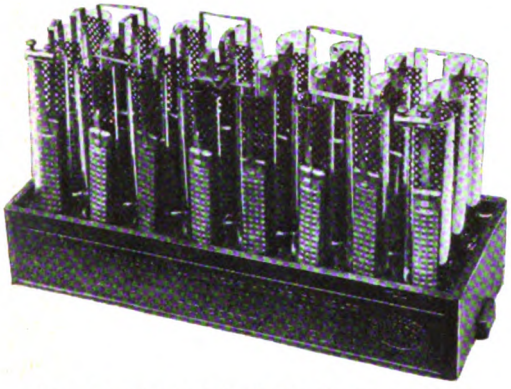

The new nickel steel alkaline battery for H.T. supply by Batteries Ltd.

Among receiving sets employing other circuit systems the Pye 5-valve set is of special interest, for being designed to receive from the Daventry station only the tuning of the two high-frequency stages once being accurately adjusted operates without the provision of control knobs. The two H.F. stages are stabilised by neutralising the effects of stray capacity and the detector valve which is an anode bend rectifier, is followed by two L.F. stages. It is interesting to note here the decline in the use of the leaky grid condenser for rectification, particularly in sets embodying one or more stages of H.F. amplification. The Pye set, which is entirely self-contained, is fitted with three simple controls, one of which disconnects an L.F. amplifier, the second is a continuously adjustable volume control and the third is a vernier condenser connected across the frame and used to correct for small differences of tuning. The majority of the portable sets are fitted with centre tapped frames.

Hart H.T. Secondary Batteries.

The increased use of secondary batteries for H.T. supply is evidenced by the considerable number of H.T. accumulators shown during the Exhibition. The Hart battery, which is of new design, is made up in 20-volt units, the individual cells being in cylindrical glass containers with sealed tops and rubber plugs fitted with glass vents. A wooden rack is arranged so that the sections can be assembled one on top of the other, thus effecting a considerable economy in space.

A novel feature was to be found in the D.P. battery, inasmuch as each individual cell was completely sealed with a thick rectangular rubber plug which permits of the plates being withdrawn and the cell easily cleaned out without the need for breaking open the cells as in the case when bitumastic or other material is used for sealing. The D.P. Battery Co., Ltd., have also introduced an entirely new form of high tension battery, the principal feature of which is the provision of a large barrel type switch extending the full length of each bank of 20 cells which when rotated gives 24, 6 or 2 volts at the output terminals.

The use of glass containers is now standard practice at least for H.T. battery construction and the Edison Swan Electric Company, in their new "Hymeg" battery, in addition to the use of glass containers, fit glass lids. The glass boxes are ribbed externally to provide spacing between the cells, and in general the battery, which is carried in an acid proof wood case, will be found to be clean and comparatively free from acid spray in use.

The introduction of the steel plate battery for H.T. supply by Batteries Ltd., of Redditch, will undoubtedly develop. The cells are constructed on the lines of the well-known "Nife" nickel steel alkaline cell which has proved so successful in a number of applications where skilled and constant attention are not available. The disadvantage of using cells of this type is that on discharge the voltage slowly falls, whereas with the lead plate battery the voltage remains practically constant during discharge. This is perhaps no serious disadvantage as regards H.T. supply while many advantages are gained. The cells are practically foolproof and require no attention beyond the occasional addition of distilled water and will not deteriorate if left unattended as compared with the sulphating that sets in in the case of the lead battery. The steel plates cannot buckle and the steel containers cannot crack while the battery can be short circuited or even charged in the reverse direction without damage. The charging rate for a given ampere-hour capacity is higher than the lead battery but the most important merit is its long life in spite of indifferent treatment.

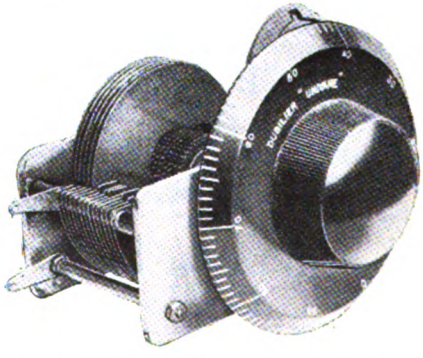

Dubilier Univane condenser in which the moving plates are propelled singly from the position of minimum to maximum capacity.

Components.

Among components mention might be made of the new Cosmos resistance-coupled L.F. amplifying stage in which the condenser and resistances are enclosed in a moulded sub-base which carries the valve holder.

Digitized by Google

As regards variable condensers progress has essentially been made in the methods adopted for supporting the plates, the provision of good bearings and a general improvement in finish. The Dubilier "Univane" condenser by an exceedingly ingenious arrangement gives a critical adjustment of capacity without the use of gearing. Each moving plate is separately controlled and by rotating the dial the plates are picked up in turn and carried from the position of minimum to maximum capacity. Apart from the scale on the dial an auxiliary indicator shows the number of plates carried over to the position of maximum capacity.

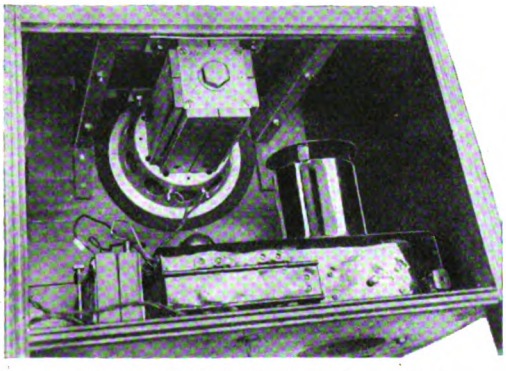

Exterior of the B.T.-H. loud-speaker. It has a moving coil movement driving "free edge" cone.

A useful buzzer wavemeter was shown by Gambrell. The type "D" instrument covers a wavelength range of from 50 to 500 metres and is fitted with a reliable form of buzzer giving a constant note and it is claimed a constant amplitude in the trains of oscillations.

The buzzer contact, instead of being rigidly mounted, is a spring and this form of construction probably accounts for the high note which is a distinct feature of the instrument. Two Gambrell coils are supplied together with the necessary calibration charts.

Changes in Loud-Speaker Design.

The decline in the popularity of the horn type loud-speaker, which is being replaced by models of the cone type, was evidenced at the Exhibition, some of the newer models being fitted with cones having "free edges." The principle of using a moving coil in a magnetic field is not new in loud-speaker construction, but the objection to this system has been the need for providing the polarisation current for the permanent field thus creating an extra drain on the current supply from the batteries.

The new B.T.-H. loud-speaker model R.K. is a moving coil instrument with a conical diaphragm practically unsupported at its edges. It is understood that an air-tight barrier is, however, fitted round the edge to prevent interaction between the sound waves set up from opposite sides of the diaphragm, and with this same purpose in view the diaphragm is mounted in the centre of a large cabinet so that the entire front board assists in preventing interaction, which would have the result of considerably reducing the volume of sound produced. A polarising field is set up by four pairs of permanent magnets, roughly 8 in. in length by 1¼ in. wide and nearly ½ in. in thickness, and arranged in pairs. An original feature also is that of incorporating a power amplifier in the loud-speaker cabinet.

Simple Testing Equipment.

At several of the stands testing sets were exhibited principally for examining valves, making continuity tests in high and low resistance circuits, and for resistance and capacity measurements.

Peter Curtis, Ltd., exhibited a testing set suitable for making all the usual tests and measurements met with by the retailer or small manufacturer.

Cleartron Radio, Ltd., now produce a simple valve testing set which they supply to retailers who handle their valves, roughly revealing filament and anode characteristics.

The Liberty Radio tester manufactured by Radi-Arc Electric Co., Ltd., is fitted with a two-range voltmeter and change-over switch for making battery tests, as well as a neon lamp which, when connected to the lighting mains, may be used for continuity and insulation tests.

The Liberty testing set for voltage measurements, continuity and insulation tests.

To the transmitting amateur probably the most interesting exhibit at the Exhibition was the experimental quartz-controlled oscillator shown by Mr. A. Hinderlich, M.A., who has apparently conducted considerable investigation work on the properties of quartz crystal by means of a valve oscillator. He demonstrated in a very simple way the use of a crystal for controlling frequency.

Digitized by Google

An Examination of the Properties of Audio-Frequency Amplifiers by Means of the Duddell Oscillograph.

By W. Baggally. **[R132**

As there appear to be very little if any data available on the nature and magnitude of waveform—as distinct from amplitude-distortion produced by audio-frequency triode amplifiers as commonly utilised in the reproduction of broadcast telephony and also for public address purposes, —an investigation was undertaken into the properties of such an amplifier.

The diagram of the instrument is shown in Fig. 1 and is quite orthodox; the coupling is by means of "Radio Instruments" standard pattern audio-frequency intervalve transformers, Marconi-Osram LS5 valves being normally used.

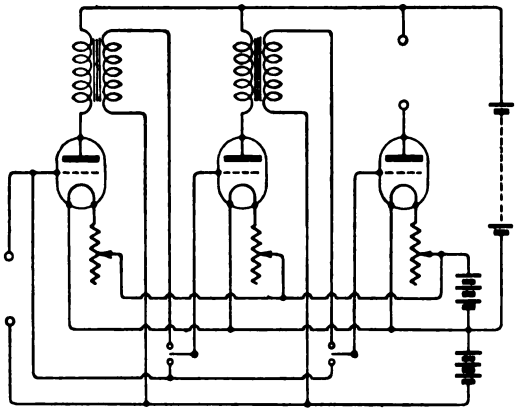

Fig. 1.

The Duddell oscillograph suggested itself as a possible instrument for use in the present investigation, and although widely known and used, a short description may not be out of place here.

The basic principle involved is that of the moving-coil galvanometer, but in the oscillograph the coil is replaced by a single tightly stretched loop of phosphor-bronze strip, the length of the vibrating portion of the loop being defined by bridge pieces in a similar manner to the strings of a violin.

Bridging this loop midway between the two bridge pieces is a very small mirror which reflects a beam of light from an arc lamp on to a photographic plate which is falling freely under the influence of gravity.

This assemblage is immersed in oil and placed between the poles of a powerful magnet, the object of the oil being to damp the vibrations and render the apparatus aperiodic.

On passing an alternating current through the loop, a couple is set up which causes the mirror and its reflected beam to oscillate, so recording the time graph of the A.C. on the falling plate.

The whole vibrating system is so small and tightly stretched that the period undamped is of the order of .0001 second, so that no difficulty from resonance effects is experienced at moderate frequencies, especially in view of the oil immersion.

In the actual oscillograph, two independent vibrators and a fixed mirror to give a zero line are immersed in the same oil bath and supported between the poles of the same magnet.

Having described in brief the action of the oscillograph, an account may be given of the actual work undertaken.

The apparatus of Fig. 2 was set up, after having calibrated the vibrators on D.C.; a previous experiment had shown that the impedance was equal to the D.C. resistance at the frequency used in the experiments, viz., approximately 480.

It will be realised that the amplitude of swing of the reflected beam gives the peak value of the current passing through the oscillograph vibrator.

Owing to various visual difficulties, such as the width of the spots of light, readings could only be estimated to 0.5 divisions on the scale used when calibrating the oscillograph, so that numerical results probably do not attain a greater accuracy than 10 per cent.

Digitized by Google

The method of examining amplifiers to be described is capable of furnishing the following information, all referring, of course, to the particular frequency chosen :—

1. An indication of the nature and extent of the waveform distortion produced by the amplifier under working conditions.

2. The total voltage amplification obtained with specified output conditions.

3. The peak voltage on the first grid, and hence the maximum permissible voltage consistent with absence of overloading and consequent distortion.

4. The best working adjustments for the amplifier.

Let us consider the methods of obtaining these results in the order given.

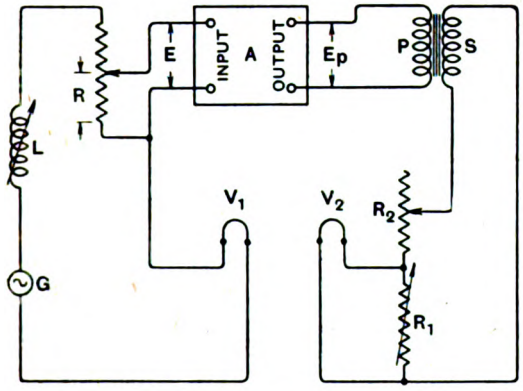

Fig. 2.

1. For this experiment, it is merely necessary to adjust the amplifier to the conditions under which it is desired to take graphs, at the same time noting that V_1 and V_2 are giving convenient deflections.

A photographic plate is allowed to fall in front of the vibrating light spots and on development the input and output graphs will be found superimposed and may be examined at leisure, when the nature and often also the cause of any distortion present will become evident.

2. Referring to Fig. 2, G is the alternating current source ; L, a choke coil for the purpose of purifying, as far as possible, the waveform of the current delivered by G ; V_1 and V_2, the vibrators of the oscillograph ; R, R_1 and R_2, non-inductive resistances ; PS, a stepdown transformer ; and A, the amplifier under observation.

Let the sensitivity of the vibrators be adjusted to equality and be S divisions of the scale per ampere.

Let V_1 and V_2 be the amplitudes of swing of V_1 and V_2 respectively, measured in scale divisions.

Let I be the peak value of the current in the circuit $G\,L\,R\,V_1$.

Let E be the peak value of the amplifier input E.M.F.

With A removed, let the primary terminals of PS be connected across R, also let R_1 be removed and R_2 short-circuited, and with the alternator running let R be adjusted until $V_1 = V_2$; let this value of R be denoted by K, the shunt effect of PS being in general negligible.

Let N be the ratio of the peak value of the current in the circuit $S\ R_1\ R_2$ to the peak value of the current in the circuit $R_1\ V_2$.

Let M be the voltage amplification of A with PS in the output circuit, the secondary of PS being loaded with a resistance V, where V is the resistance of V_2.

Then with the amplifier removed as above, $M=1$, also $N=1$, $V_1=V_2$ and $R=K$.

Now keeping all other conditions unchanged, let A be introduced into the circuit, then we have

$$E_p = ME$$

where E_p is the peak voltage across the primary terminals of PS.

Therefore $$V_2 = MV_1$$

or $$M = \frac{V_2}{V_1}$$

Now assume K changed to some other value R, then since E changes in the same ratio without affecting V_1 we have

$$M = \frac{KV_2}{RV_1}$$

Now let R_1 and R_2 be introduced and we obtain $$M = \frac{NKV_2}{RV_1} \quad \ldots \quad (1)$$

Now in order to obtain N we can proceed as follows :—

It is necessary that the load on PS be kept constant throughout the experiments

Digitized by Google

and equal to the resistance of V_2 alone, so that we have

$$R_2+\frac{1}{1/R_1+1/V}=V$$

which becomes

$$V^2=R_2(R_1+V) \quad \ldots \quad (2)$$

also from the theory of shunt circuits we have

$$R_1=\frac{V}{N-1} \quad \ldots \quad \ldots \quad (3)$$

substituting for R_1 in (2) we obtain

$$V^2=R_2\left(V+\frac{V}{N-1}\right)$$

transposing we have

$$R_2=\frac{N-1}{N}V \quad \ldots \quad \ldots \quad (4)$$

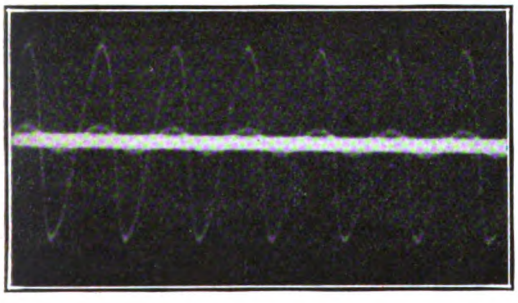

Oscillograph 1.

It will thus be seen that by making measurements of the amplitudes cf swing of the oscillograph vibrators, at the same time noting the values of the various resistances, the amplification obtained at the frequency used is at once obtained by the above simple formula.

Of course, when the amplifier is removed from the circuit, an oscillogram may be taken and will show up any waveform distortion occurring in *PS*.

3. The peak voltage impressed upon the first grid is obtained from the relation

$$E=\frac{V_1R}{S} \quad \ldots \quad \ldots \quad (5)$$

which is obvious and requires no proof.

4. If a rotating mirror is available, the reflected beams from the oscillograph may be allowed to fall upon a small white screen, the screen being viewed by reflection in the revolving mirrors, when the waveforms will be visible; the adjustments of the amplifier are then varied until the distortion is reduced to a minimum.

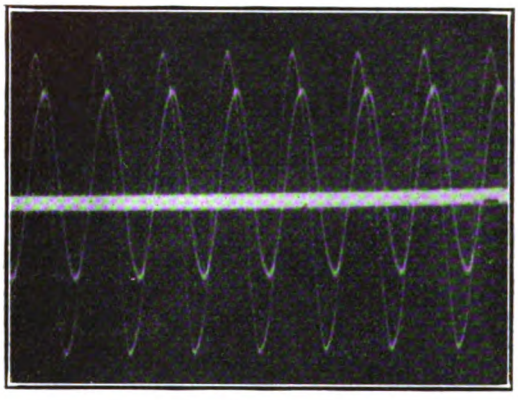

Oscillograph 2.

The following tests were conducted on the amplifier in order to illustrate the method :—

E was adjusted to a value of 1 volt peak, as probably representing average conditions, the frequency of the generator being, as previously mentioned, about 480 cycles per second.

Oscillograms 1-4 were then taken on the amplifier with one, two and three stages, using LS5 valves, and with three stages using R4 valves respectively; the operating details are shown in the table.

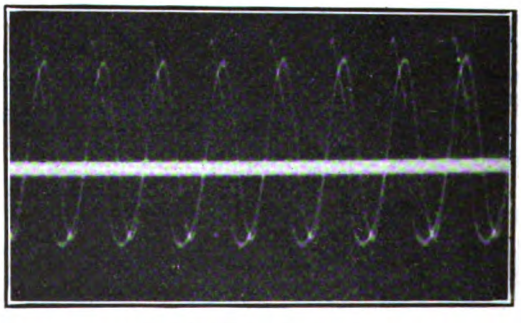

Oscillograph 3.

Oscillograms 5 and 6 are included as examples of what may happen to the output waveform if the amplifier is wrongly used; No. 5 shows the effect of excessive overloading, while No. 6 was taken while the valves were oscillating at a frequency of the

Digitized by Google

order of 10^4 cycles per second and is a tribute to the facility with which the oscillograph follows rapid and complex current fluctuations.

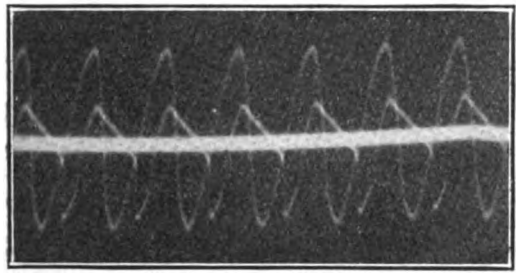

Oscillograph 4.

No precise details are available concerning these last two graphs, as they were obtained in the course of preliminary work.

It can easily be shown that a triode possessing the constants of the LS5 requires an anode voltage of about 300 and a negative grid potential of about 30 volts in order to take full advantage of its characteristics. (It will be noticed from oscillogram 3 that the last valve is overloaded when the anode and grid voltages are 120 and 10 respectively.)

In order to determine the maximum permissible peak voltage on the first grid under the best working conditions, a potential of 300 volts was applied to the

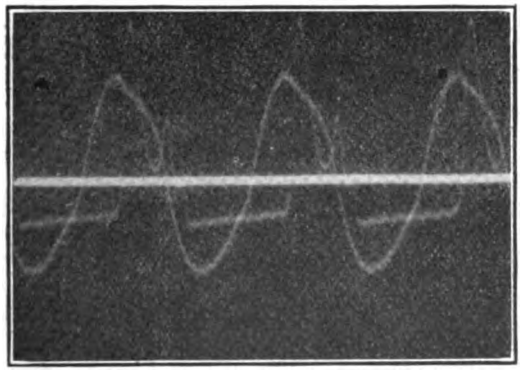

Oscillograph 5.

anodes, the immediate result being the breakdown of one of the intervalve transformers, which were of the old (non-sectional) type manufactured by Messrs. Radio Instruments, Ltd.

These were replaced by the new (sectionally wound) type by the same firm and the amplifier again connected up.

The instrument was now found to be oscillating at a frequency of about 16 periods per second, and in order to stabilise it, it was necessary to connect a (nominal) 0.1 megohm leak across the secondary of the first transformer and reduce the anode potential to 230 volts.

The output wave was then examined in a rotating mirror while the input voltage was increased until the first signs of distortion appeared, and then decreased until the distortion just disappeared.

The value of input voltage was calculated and found to be 0.49 volt, the amplification being 216, the steady grid potential 30 volts and the anode voltage 230.

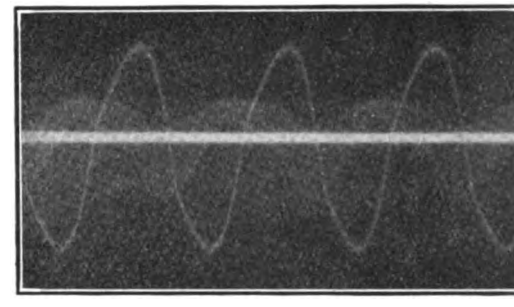

Oscillograph 6.

Keeping the grid and anode voltages constant, the amplification with two stages was 40 and with one stage 4.

These figures, and those in the table, giving the amplification produced by the

TABLE.

E.M.F. on first grid = 1 volt peak.
Anode volts = 120.
Grid volts = 10.
LS5 valves, filament current normal.

Oscillogram No.	No. of stages.	Loudspeaker.	Voltage amplification.
1	1	Very weak	3.2
2	2	Moderate	40
3	3	Loud	150
R valves, anode volts 65, grid volts 1.5, filament current excessive			
4	3	Weak	15

Digitized by Google

various combinations of stages, call for some comment, and further research along these lines is probably indicated.

It may be said at the outset, that there are no mechanical faults in the amplifier, as the valves and transformers have been changed and all tested separately, also the individual complete stages, in their places on the ebonite panel.

The low amplification given by the first stage is explained by the fact that this figure does not include the step-up of a transformer, which is included in the values for the other stages.

It will, however, be observed that the total amplification given by the three stages working together should be $4 \times 10 \times 10 = 400$, whereas that actually obtained is about one-half this number.

Pending further experiments, the writer is inclined to think that the cause may be reverse reaction effects between the stages, as it is found that on reversing the connections to primary or secondary of either of the intervalve transformers, the instrument oscillates violently, thus demonstrating the presence of reaction effects which, when shifted in phase by 180 degrees, may lower the amplification.

It was also found on one occasion that merely reversing the connections to the primary of the output step-down transformer caused the amplification to change from 75 to 172, thus showing that large variations in the amplification attained under slightly differing conditions are to be expected.

The loud-speaker results given were obtained by changing over the amplifier output from the oscillograph and its auxiliary apparatus to a large "Magnavox" loud-speaker and are merely intended to act as a very rough guide as to what may be expected under the conditions quoted.

It is to be noted that the frequency (about 480) is somewhat low for a loud-speaker, so that it is probably not working to the best advantage; however, the loud-speaker tests are interesting when comparing the oscillograms.

The loud-speaker strength when using three stages with 230 volts on the anodes and an input of 0.49 peak volt, was about the same as with 120 volts on the anodes and an input of 1 peak volt, although in the former case distortion was absent and in the latter, quite marked; this is an excellent example of the enormous advantage, both in purity and volume, to be derived from the use of sufficient anode potential to bring the straight portion of the characteristic to the negative side of the axis of anode current.

The writer draws the following conclusions from the experiments, but in what follows due allowance must be made for the preference generally evinced by loud-speakers for the higher frequencies.

1. An average general purpose receiving valve operating a loud-speaker, however weakly, using average values of anode voltage (*e.g.*, 65) and grid potential (*e.g.*, 1.5), will in general be overloaded.

2. A power amplifier valve of the LS5 class, using the values of anode and grid potential usually to be found in loud-speaking broadcast receivers (*e.g.*, 120 and 10, say), will produce a moderate volume of sound sufficient to fill a fair-sized room without overloading, but no more.

3. A similar valve, whose anode and grid potentials have been so raised as to make use of the whole of the linear part of the characteristic curve, is, with a suitable loud-speaker, capable of producing a considerably greater volume.

Statements such as the above are of necessity of a vague general nature, owing to the difficulties of estimating sound intensities, etc.

It is almost certain that quite a large amount of distortion may pass unnoticed owing to the tolerance of the human ear, but it nevertheless may be perceived subconsciously, so that every effort should be made to reduce it to the absolute minimum.

Digitized by Google

Calibration of Ultra Short Wavelengths.

F. Aughtie, B.Sc. (G6AT). **[R213**

THE usual way of calibrating a circuit for short wavelengths is to employ a calibrated oscillator, which is rich in harmonics, and by taking readings of successive "chirps" determine the order of the wavelength and hence determine which harmonic of the oscillator is beating with the receiver.

An example will make this clear: Suppose we obtain chirps at 120, 150, and 180 metres, the differences between readings are both 30 metres and we see that the receiver is oscillating at 30 metres, beating with the 4th, 5th and 6th harmonics of the wavemeter respectively.

If, however, we try to calibrate on about 5 to 10 metres from a wavemeter whose fundamental range is, say, 100 to 200 metres, some considerable difficulty is experienced in determining which harmonic of the wavemeter is causing the chirp. The reason for this is as follows:—

An ordinary condenser dial cannot be read to within less than about half a degree, that is roughly to within one-third per cent. This, combined with the fact that the calibration curve will not actually be perfectly smooth—although it will be drawn so—causes the average wavemeter to have an accuracy not better than half of one per cent. Now suppose we get chirps at 100 and 105 metres by wavemeter. Our 100 metres may be anywhere between 100.5 and 99.5; similarly the 105 metres is somewhere between 105.5 and 104.5 roughly. Hence the difference between these may be anything between 4 and 6 metres. Are we, therefore, at the 25th harmonic of 100 metres or at the 17th, or which one in between these is the right one to choose? If we go higher up the scale of the wavemeter the latitude of successive differences will increase so that even by averaging we are still left to make the choice between four or five possible values.

After some thought the writer has evolved a method of deciding which harmonic is causing the chirp, and is writing this article trusting that the method may be of some help to other experimenters interested in the ultra short wavelengths. The method is best explained by an example:—

In an actual calibration (of the minimum wavelength for a particular coil) chirps were heard at settings of the calibrated oscillator corresponding to 150.7, 156.1, 161.4, 167, and 172.5 metres. The successive differences are: 5.4, 5.3, 5.6, 5.5 metres. Set out five columns and at the head of each place the readings 150.7, 156.1, etc. (see Table I.). In each column write the value of the different harmonics of the particular wavelength which may be correct and also one or two above and below these, *i.e.*, under 150.7 we have written the readings 6.03, 5.80, 5.58, 5.38, 5.20, 5.03; being respectively the 25th, 26th, 27th, 28th, 29th, 30th harmonics of 150.7 metres. Under 156.1 we have 6.02 . . . 5.04 being the 26th . . . 31st harmonic. And so on for the other readings.

TABLE I.

150.7	156.1	161.4	167	172.5
6.03	6.02	5.98	5.97	5.95
5.80	5.79	5.77	5.77	5.75
5.58	5.58	5.57	5.57	5.56
5.38	5.38	5.38	5.39	5.39
5.20	5.21	5.21	5.22	5.23
5.03	5.04	5.05	5.06	5.07

Differences are: 5.4, 5.3, 5.6, and 5.5.

TABLE II.

147.8	153	158.4	163.8	169
5.68	5.67	5.67	5.65	5.64
5.47	5.47	5.46	5.47	5.45
5.28	5.28	5.28	5.28	5.28
5.10	5.11	5.12	5.12	5.125
4.83	4.94	4.95	4.96	4.97

Differences are: 5.2, 5.4, 5.4 and 5.2.

Now look along the first line; the readings are: 6.03, 6.02, 5.98, 5.97, 5.95: there is

Digitized by Google

a steady *fall* from left to right. Along the bottom line the readings are 5.03, 5.04, 5.05, 5.06, 5.07—a steady *rise* from left to right. On looking at the whole table, it will be seen that in all the lines above the one 5.38, 5.38, . . . 5.39, there is a *fall* from left to right, whereas in all the lines below this one there is a steady *rise* from left to right. It is therefore clearly seen that the particular wavelength measured lies between 5.38 and 5.39. Our probable error, therefore, is of the order of 0.2 per cent. despite the fact that the successive differences differed by quite a considerable amount.

To make the method quite clear a further example is set out in Table II. As before, the readings of the wavemeter are given at the head of the columns; successive differences give the clue as to which harmonics to write down and these are entered in the columns. It will be seen that in this case the wavelength was 5.28 metres.

A Very Sensitive Valve Galvanometer.

By Prof. G. W. O. Howe, D.Sc. **[R251**

R. JAEGER and H. Scheffers, of the Siemens & Halske Co., have recently described* a very sensitive valve galvanometer employing a double grid valve with resistance back-coupling. The diagram of connections is shown in the figure. The

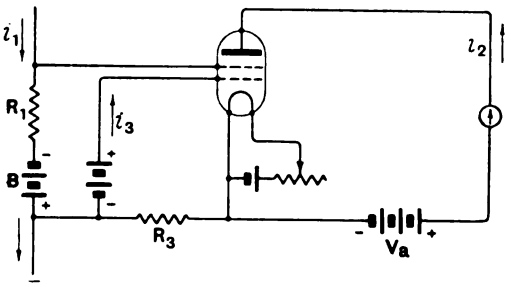

space charge current i_3 of the inner grid and the anode current i_2 are always together equal to the saturation current, so that $i_3+i_2=i_5=$constant. The current i_3 passes through the back-coupling resistance R_3 and tends thus to lower the potential of the outer grid. The current i_1 to be measured passes through the resistance R_1 and thus tends to raise the potential of the outer grid; hence its resultant potential $V_g=i_1R_1-i_3R_3+B$. The bias voltage B may be positive or negative. In the anode circuit, $i_2=(V_g+aV_a)/R_i$ where a and R_i are constants of the valve, assuming that one is working on the straight part of the characteristic.

From these three equations it can be shown that

$$\frac{dV_g}{di_1}=\frac{R_1}{\left(1-\frac{R_3}{R_i}\right)}$$

As R_3 approaches R_i in magnitude this expression approaches infinity, and a very small change in the current i_1 causes a very large change in V_g and therefore also in the anode current which is read on a sensitive galvanometer. The effect of the back-coupling is equivalent to an increase in the steepness of the characteristic of the valve; it can be explained very simply as follows: The current i_1 increases the potential of the outer grid; this causes an increase of the anode current, but since the inner grid is so positive that its current together with the anode current is equal to the constant emission current of the filament, the increase of anode current causes a decrease in the current i_3 and therefore a reduced voltage drop in the resistance R_3. This tends to raise the potential of the outer grid still further and the whole cycle is gone through again, the effects being cumulative.

One cannot push the sensitivity too far, however, owing to the difficulty of keeping the filament temperature constant, but with care the value of R_3 can be so adjusted that the effective steepness of the characteristic is ten times its original steepness.

* See *Elektrotechnik und Maschinenbau*, p. 1038, 27th December, 1926.

Digitized by Google

Abstracts and References.

Compiled by the Radio Research Board and reproduced by arrangement with the Department of Scientific and Industrial Research.

R000.—WIRELESS AND GENERAL.

R008.—UNITED STATES—RADIO PATENTS. (*Electrical Review*, 13th August, 1926, p. 264.)

"The rise of radio has resulted in the swamping of the United States Patent Office with applications." Although the number of examiners handling radio applications has been almost trebled, 1,850 petitions are pending, and the radio division is five months behind the applications.

R008.—SAFEGUARDS FOR THE RADIO INVENTOR.—E. Curtis. (*Proc. Inst. Radio Engineers*, Vol. 14, August, 1926, pp. 471—477.)

Precautions to be taken by the radio inventor who is not associated with an organisation which includes a patent department, with explanation why such precautions are necessary.

R070.—COLLEGIATE TRAINING FOR THE RADIO ENGINEERING FIELD.—C. Jansky, Jr. (*Proc. Inst. Radio Engineers*, Vol. 14, August, 1926, pp. 431—445.)

A paper presented before the Chicago section, I.R.E., in March, and at the New York meeting in June, together with the discussion following it.

R080.—SHORT-WAVE TRANSMISSIONS. (*Wireless World*, 18th August, 1926, pp. 221—222.)

A list of some 140 stations in all parts of the world working on wavelengths between 13 and 150 metres.

R100.—GENERAL PRINCIPLES AND THEORY.

R113.—NOTES ON WIRELESS MATTERS. (*Electrician*, 23rd July, 1926, p. 100.)

Two letters referring to Mr. Turner's article on wave propagation in the issue of 9th July, p. 42 (these abstracts, *E.W.& W.E.*, September, 1926, p. 567). The first is from the author himself correcting certain misprints in formula (*d*), and the second is from Mr. T. L. Eckersley, showing that formula (*b*) is incorrect, and that the field strength is not proportional to $1/\sqrt{H}$, but to $1/H$, the power radiated not being independent of H.

In the *Electrician* of 13th August, p. 176, Mr. Turner replies to this objection.

R113.—WIRELESS TRANSMISSION I. & II.—Charles E. Snell. (*Electrical Review*, 23rd July, p. 138 and 6th August, 1926, p. 207.)

The first article discusses the subject particularly from a theoretical aspect and suggests a way of bringing theory and practice into agreement.

The second article deals with the phenomena of the daylight effect and atmospherics showing that light is thrown upon these by the views put forward in the first article.

The following conclusions are reached :—

1. Wireless transmission is dependent partly on the electrical conductivity of the earth's surface and partly on the dielectric properties of the earth's atmosphere.

2. The electrical conductivity of the earth's surface is invariable and is the contributory cause of the constancy of efficiency shown in daylight transmission.

3. The variations in transmission efficiency at night are occasioned by variations in the air dielectric brought about by night radiation from the earth's surface.

4. The night radiation from the earth's surface is a function of the sun's mean altitude so far as this radiation influences the electrical efficiency of the air dielectric; other causes, however, occasion transient variations in the night radiation sufficient to obscure this relationship in isolated observations.

5. The transient variations in the earth's night radiation are present to a greater degree in cases of overland transmission and in the vicinity of land masses.

With regard to "atmospherics," disturbances at night are stated to be frequently due to earth currents circulating in the neighbourhood of the receiving aerial. It is suggested that these currents arise from the equalisation of potential differences between the materials of the earth's surface.

A letter referring to this article, by T. Barton, in the issue of 20th August, p. 301, suggests that the all-important factor in wireless transmission is its wavelength of propagation. Evidence is given to show that greater distances of transmission can be obtained during the day than during the night, using short wavelengths.

R113.1.—WIRELESS SIGNAL FADING.—E. V. Appleton. (*Wireless World*, 11th August, 1926, pp. 181—182.)

A simple method of measurement and some of the results obtained.

R113.1.—ON THE RELATION BETWEEN SHORT WAVELENGTHS AND POSSIBLE COMMUNICATION HOURS TOGETHER WITH THE COMMUNICATION DISTANCE.—T. Nakayama, T. Ono, and C. Anazawa. (*Journ. Inst. Elect. Engineers of Japan*, July, 1926, pp. 695—711.)

Description of a year's investigation which leads to the following conclusions :—

1. The wavelength of about 24 metres is critical.

2. Waves of 25 metres or more are best utilised for night long distance communication.

Digitized by Google

3. Waves of 22 metres or less are good for daylight long distance communication.

4. The phenomenon of skipped distance exists especially for waves below 20 metres.

R113.2.—SPECIFIC STUDY OF CONDITIONS AFFECTING RANGE OF RADIO STATIONS.—C. Jansky, Jr. (*Bulletin No.* 297, *U.S. Bureau of Standards.*)

A paper describing the organisation of a group of observers by the bureau, the methods employed for making observations, and the forms used for recording 8,500 observations made over a period of a year (1922-23). The data obtained were analysed on automatic machines, and charts were given showing the variation of strength of atmospheric, variation of fading, relative magnitude of obstacles to reception, variation of interference from receiving sets, relative magnitude of obstacles to reception grouped in bi-monthly periods, and mean reliability of reception as a function of distance.

R113.4.—UPPER AIR PHENOMENA. (*Nature*, 14th August, 1926, p. 221.)

An account of Dr. Dobson's paper: "The Uppermost Regions of the Earth's Atmosphere," being the Halley lecture given on 5th May, 1926. The paper reviews the present state of our knowledge of the constitution of the upper atmosphere and of the chief natural phenomena occurring above the isothermal layer.

R113.4.—METEORS AND THE CONSTITUTION OF THE UPPER AIR.—Prof. Lindemann. (*Nature*, 7th August, 1926, pp. 195—198.)

The view is expressed that the persistence of the conducting layer at night is due to solar radiation forming some unstable substance, such as ozone, which gradually reacts or breaks up forming ions during the hours of darkness, and that the layer of maximum ionisation after sunset will move up as the ozone becomes used up during the night to regions of lower density where the rate of reaction is smaller. It is explained that it is above 50 km. that the concentration of ozone compared with that of water-vapour and carbonic acid becomes important and that the amount of ozone formed per cm.^{3} reaches a maximum somewhere in the neighbourhood of 60 km.

This hypothesis will account for the height of the Heaviside layer varying from 50 km. at sunset to some 80 km. at sunrise which the facts observed in radio seem to require.

R113.4.—RELATION BETWEEN THE HEIGHT OF THE KENNELLY-HEAVISIDE LAYER AND HIGH FREQUENCY RADIO TRANSMISSION PHENOMENA. A. Hoyt Taylor.—*Proc. Inst. Radio Engineers*, Vol. 14, August, 1926, pp. 521—540.)

The theoretical basis of this paper was published in the *Physical Review* for January, 1926. That paper was in turn based upon certain experimental data which have been considerably extended since the date it was submitted for publication. The present paper describes further investigation of the skip distance effect, and the indication that it gives as to the height of the Heaviside layer, and the lower limit of wavelength which will be useful in long-distance communication. The results are not summarised. An interesting case is mentioned of a station that appears to show no skip at all.

R113.7.—ON THE ATTENUATION OF WIRELESS SIGNALS IN SHORT DISTANCE OVERLAND TRANSMISSION.—J. Ratcliffe and M. Barnett. (*Proc. Cam. Phil. Soc.*, July, 1926, pp. 228—303.)

The following summary is given :—

1. It is pointed out that the signal strength of a wireless wave at a distant point depends on :—

(*a*) the electrical constants of the ground,
(*b*) the curvature of the earth,
(*c*) the existence of an "atmospheric" ray coming downwards from the Heaviside layer.

2. We can eliminate the effect of (*b*) and (*c*), and so obtain direct evidence about the electrical constants of the ground, by making measurements near the transmitter.

3. Measurements on wavelengths of 300 metres and upwards give information about the resistivity of the ground, and on shorter wavelengths (15 metres) give the dielectric constant of the ground.

4. Attenuation measurements have been made over short distances for wavelengths of 1,600 metres and 360 metres.

5. The results are compared with those calculated from Sommerfeld's theory and show close correlation for distances beyond 10 wavelengths but show deviations from the theory for shorter distances.

They give as values for the resistivity of the ground

$$\rho = 1.8 \times 10^{13} \text{ E.M.U.}$$

for the Daventry signals, and

$$\rho = 0.6 \times 10^{13} \text{ E.M.U.}$$

for the London signals.

A note is added saying that since the paper was written further measurements have been made within 20 miles of the London transmitter, which show that calculations based on a single value of "ρ" will not give as close an agreement with the experimental results as can be obtained by assuming that ρ changes with the nature of the ground. For example, the results up to 20 miles agree with the value $\rho = 2 \times 10^{13}$ E.M.U., whereas the results for greater distances, as shown above, indicate the value $\rho = 0.6 \times 10^{13}$ E.M.U. It is interesting to note that such a change in ρ would be anticipated from the known geological nature of the ground, which consists of London clays up to about 20 miles from the transmitter and of chalk at greater distances.

R113.8.—RELATIONS ENTRE LES PERTURBATIONS ELECTROMAGNÉTIQUES ET LES TROUBLES SOLAIRES.—A. Nodon. (*L'Onde Electrique*, Vol. 5, July, 1926, pp. 359—364.)

The following summary is given :—

The propagation of electromagnetic waves

Digitized by Google

appears to be closely linked with the state of ionisation and conduction of the upper layers of the atmosphere. The ionisation seems due to ultra penetrating radiation emitted by the sun and stars. This emission undergoes profound modifications during solar and electromagnetic disturbances, entailing corresponding effects in radio propagation.

R113.9. — POLARISATION CHANGES CAUSED BY GROUND ABSORPTION.—E. F. W. Alexanderson. (*General Electric Review*, August, 1926, pp. 553—554.)

In the reception of short waves, the signal often appears to come in with equal strength from all directions. Measurements with a loop indicate the presence of a horizontal and a vertical wave component with different velocities of propagation, resulting in differences of polarisation from point to point. The author discusses the phenomenon, using as an analogue sound waves proceeding from a loud-speaker horn, and suggests that the earth may absorb the horizontal polarised waves and reflect the vertical ones, thus giving rise to a twisting wave spiral.

R114. — PERTURBATIONS ATMOSPHÉRIQUES ET LONGUEURS D'ONDES.—H. de Bellescize. (*L'Onde Electrique*, Vol. 5, July, 1926, pp. 347—358.)

The following summary is given :—

Propagation formulæ, connecting the oscillations in transmitting and receiving antennæ, can only be of practical utility when the correspondence that exists between the electromotive forces received and the degree of security obtained is definitely known. Now atmospherics constitute the principal obstacle to be surmounted, and it is therefore upon them that the values to give these electromotive forces depend.

It is examined whether the hypothesis on which atmospherics vary arbitrarily is able to account for the results found by experiment.

A first verification based on the measurement of electromotive forces equivalent to the disturbances tends to prove that, on the average, these latter increase slightly with the wavelength, while a second method consisting of combining the hypothesis with Austin's propagation formula leads to the opposite result.

It seems then, on the one hand, that the hypothesis can be retained, as a first approximation, and on the other hand, that current propagation formulæ should undergo slight alteration so as to less favour decreasing waves.

It is insisted that where the hypothesis is concerned, as also the verifications attempted, refer only to a mean value around which the instantaneous phenomena vary without doubt within wide limits.

R114. — LES ATMOSPHÉRIQUES. — R. Bureau. (*L'Onde Electrique*, Vol. 5, July, 1926, pp. 301—346.)

" Conference de documentation faite à la Société des Amis de la T.S.F., le 19 mai, 1926."

The paper, whose main theme is that atmospherics are not caused by storms, but ascending currents of air, is divided into five sections :—

1. Methods of observation and measuring instruments.
2. Results.
3. Meteorological influences.
4. Theories.
5. Conclusion.

Observations on the frequency of atmospherics are discussed, and on their intensity, directivity, wavelength and nature. The results are found to show three distinct types of variation :—

(*a*) With a maximum at night.
(*b*) With a maximum in the afternoon.
(*c*) With any distribution of the periods of violent atmospherics.

These three types point to three distinct causes for atmospherics and can serve as a basis for their classification.

The first type, which is the least important of the three, is thought to originate in layers of anti-cyclonic inversion ; its disappearance at sunrise corresponds to descending currents extending down to the ground ; the second type is attributed to the heating of the ground by the sun and the resulting ascending currents of air ; and the third to the effect of atmospheric discontinuities. All three refer back to the vertical temperature gradient.

The properties of atmospherics of the second type (grinders) are shown to follow from their origin (air ascending owing to solar heating of ground), for they

(*a*) Appear at a definite time (afternoon) ;
(*b*) Are much more intense in summer than in winter ;
(*c*) Are much more violent over the continents than oceans ;
(*d*) Are observed chiefly in low altitudes ;
(*e*) Diminish rapidly in intensity with altitude ;
(*f*) Are specially violent when the meteorological situation favours ascending currents due to solar heating of the ground (in France pseudo polar front).

The properties of the third type of atmospherics (clicks) are also linked with their origin (convection currents caused by the movement of masses of air), for they

(*a*) Appear at any hour of the day or night :
(*b*) Are not confined to the warm season, but are also observed in winter ;
(*c*) Are characteristic of medium latitudes ;
(*d*) Appear indifferently over sea or land, though they can be reinforced by mountain chains which have an effect on meteorological perturbations ;
(*e*) Vary in intensity with altitude, the direction of variation depending upon the meteorological situation ;
(*f*) Develop parallel with the meteorological perturbations (appear with cold fronts and disappear with warm).

The atmospherics coming through at any station almost always belong to the three categories, and if they are studied *en bloc* it is impossible to avoid observing a mixture of the properties of the three varieties.

Digitized by Google

As concerns other theories on the origin of atmospherics, cosmic ones are not considered justifiable, and the theory of local meteorological action is set over against that of a tropical origin for atmospherics.

An exhaustive bibliography of the subject is appended, also a communication from Mr. Watson Watt, made at the end of the lecture, where he briefly indicates the newer methods of the Radio Research Board, which lead to other conclusions than those arrived at by M. Bureau.

R114.—LIGHTNING. (*Nature*, 7th August, 1926, p. 190.)

A letter by Dr. Dorsey referring to Dr. Simpson's article (*Proc. Roy. Soc.*, May, 1926), intending to show that the positive tongue theory advanced by Dr. Simpson and the electronic dart theory proposed by himself are not conflicting, but mutually complementary (see these abstracts, *E.W. & W.E.*, July, 1926, p. 454.)

A reply from Dr. Simson follows in which he indicates fundamental difference between his point of view and that of Dr. Dorsey.

R120.—STRAIGHTENING OUT THE ANTENNA.—B. Melton. (*Q.S.T.*, Vol. 10, August, 1926, pp. 30-32.)

An article "intended to straighten out our ideas on radiating systems in general."

R125. — PRACTICAL DIRECTION - FINDING.—R. L. Smith-Rose and R. H. Barfield. (*Wireless World*, 11th August, 1926, pp. 193-197.)

Construction and calibration of an accurate direction-finder for amateur use.

R125.1.—THE CAUSE AND ELIMINATION OF NIGHT ERRORS IN RADIO DIRECTION-FINDING.—Dr. Smith-Rose and R. Barfield. (*Journ. Inst. Elect. Engineers*, Vol. 64, August, 1926, pp. 831-843.)

A paper read before the Wireless Section, 5th May, 1926, summarised as follows :—

The paper describes experiments which have been carried out with a view to obtaining more conclusive evidence as to the causes of the apparent variations in bearings observed under certain conditions on wireless direction-finders. In the course of the experiments the Adcock "four-aerial" direction-finder has been developed, and with its aid it has been shown that the actual deviation in azimuth of wireless waves is practically negligible. These experiments thus constitute a proof that the variable errors observed on closed-coil direction-finders at night are caused by down-coming waves arriving from the upper atmosphere and polarised with the electric force in a horizontal plane. The investigation also indicates the possibility of the Adcock system being developed into a practical direction-finder which is free from night errors, and those errors associated with observations on aircraft transmissions made at a ground direction-finding station.

The discussion following the reading of the paper is also given.

R125.6. — DIRECTIVE DIAGRAMS OF ANTENNA ARRAYS.—R. Foster. (*Bell System Technical Journal*, Vol. 2, pp. 292-307.)

Two systematic collections of directive amplitude diagrams are shown for arrays of two and of sixteen identical antennæ spaced at equal distances along a straight line with equal phase differences introduced between the currents in adjacent antennæ, assuming that each antenna radiates equally in all directions in the plane of the diagram. The diagrams may be used to obtain the directive diagram in any plane though an array made up of antennæ which do not radiate equally in all directions in this plane but which satisfy the other conditions. The total directive effect is given as the product of the individual effect multiplied by the group effect.

R130.—DEMONSTRATION OF SOME SIMPLE EXPERIMENTS WITH THERMIONIC VALVES.—Dr. Rayner. (*Proc. Phys. Soc. Lond.*, Vol. 38, November 4, 1926, pp. 335—336.)

R130.—OPERATION OF THERMIONIC VACUUM TUBE CIRCUITS.—F. B. Llewellyn. (*Bell System Technical Journal*, July, 1926, pp. 433—462.)

The following synopsis is given :—

Given the static characteristic of grid current-grid potential, and plate current-plate potential, for any three-element vacuum tube, the general exact equations for the output current when the tube is connected in circuits of any impedance whatsoever, and excited by any variable voltage, are here derived. The method of derivation is illustrated in the special case where resistances only are considered, and the adaptation of complex impedance to use in non-linear equations is shown. Approximations that are allowable in various practical applications are indicated, and the equations are applied in some detail to grid-leak detectors, and in brief to other types of detectors, modulators, amplifiers and oscillators.

R131. — VALVE CHARACTERISTIC SURFACES. — E. Harwood. (*Wireless World*, 11th August, 1926, pp. 185-187.)

Investigation of the best working conditions for a valve oscillator.

R.131.—USE OF PLATE CURRENT-PLATE VOLTAGE CHARACTERISTICS IN STUDYING THE ACTION OF VALVE CIRCUITS.—E. Green. (*E.W.& W.E.*, July, 1926, pp. 402—406 ; August, 1926, pp. 469—476.)

R138.—EQUATIONS FOR THERMIONIC EMISSION.—P. Freedman. (*Nature*, 7th August, 1926, p. 193.)

R144.—EFFECTIVE RESISTANCE OF INDUCTANCE COILS AT RADIO FREQUENCY—PART IV.—S. Butterworth. (*E.W.& W.E.*, August, 1926, pp. 483—492.)

R149.—SUR LA DÉTECTION PAR LES CONTACTS MÉTALLIQUES DÉTECTEUR SYMÉTRIQUE.—H. Pelabon. (*Comptes Rendus*, 28th June, 1926, pp. 1605—1607.)

Digitized by Google

R162.—AERIAL FILTER CIRCUITS.—P. Tyers. (*Wireless World*, 4th August, 1926, pp. 169—171.)

Experiments with a simple method of improving unselective receivers.

R200.—MEASUREMENTS AND STANDARDS.

R201.—EMPLOI DE L'ELECTROMÈTRE À QUADRANTS DANS LES MESURES DE PRECISION EN HAUTE FRÉQUENCE.—L. Cagniard. (*Comptes Rendus*, 21st June, 1926, pp. 1528—1530.)

R235.—THE PROPERTIES OF MUTUAL INDUCTANCE STANDARDS AT TELEPHONIC FREQUENCIES.—L. Hartshorn. (*Proc. Phys. Soc. Lond.*, 35, 4, pp. 302—320.)

The following abstract is given :—

It is well known that when a mutual inductance carries alternating current, the value of the effective mutual inductance varies with the frequency, and further that the secondary P.D. is not exactly in quadrature with the primary current. Thus certain frequency corrections are introduced into all alternating-current bridges in which a mutual inductance standard is used. An experimental investigation has been made of the actual magnitude of such corrections for mutual inductance standards of three types :—

1. A stranded wire fixed standard, with spaced winding to minimise capacity effects.

2. The Campbell variable mutual inductance standard.

3. The Tinsley variable mutual inductance standard made in accordance with Butterworth's recommendations. Values of the corrections are given for all these instruments under various conditions. It is shown that whereas the variation of mutual inductance with frequency is mainly due to capacity effects; dielectric losses in the insulation, or alternating current conductance, play an important part in the determination of the phase defect, the impurity being found to be proportional to a power of the frequency higher than the second, over the telephonic range of frequency.

R240.—EIN NEUES ROHRENGERAT ZUR MESSUNG SEHR HOHER WIDERSTÄNDE MIT SEINER SONDERANWENDUNGEN. (A new valve high-resistance ohmmeter with particular applications.)—S. Strauss. (*Elektrotechnik und Maschinenban*, 44, 19, pp. 348—355.)

If the grid of a vacuum tube is charged negatively no current can flow in the anode circuit. If a high resistance is connected beween the grid and the cathode, a negative charge placed upon the grid will slowly leak across this high resistance. As soon as the grid voltage approaches a certain minimum value an anode current will begin to flow, increasing proportionally to the decrease of the grid voltage. Parallel to the high resistance is a fixed condenser, which will be charged by the anode current and later discharged across the resistance, the charging and discharging taking place at definite intervals. The number of discharges of the condenser in a given time interval is a direct measure of the unknown resistance. A complete portable equipment based upon this principle is described.

R251.2.—MEASURING SMALL ALTERNATING CURRENTS.—E. Banner. (*Electrician*, 20th August, 1926, pp. 202—203.)

Description of some modifications of the Duddell thermo-galvanometer for H.T. work.

R251.3.—TRANSFORMERS FOR THE MEASUREMENT OF LARGE CURRENTS AT RADIO FREQUENCIES.—I. Maloff. (*General Electric Review*, Vol. 29, August, 1926, pp. 555—558.)

An account of the theoretical and experimental considerations leading to the development of two types of radio-frequency current transformer. The first type is intended for a primary current range of 5 to 100 amps, at frequencies from 10 to 500kC and 2,000 volts at radio frequency between the windings. The core consists of a number of very thin ring-type enamelled laminations of high grade iron. The secondary is wound around this ring and placed in a box container, made from specially treated maple wood. The primary winding is placed in the groove in the outer surface of the box. The second type of instrument covers radio-frequency current transformers of maximum primary current rating from 40 to 400 amps at frequencies from 10 to 200kC and with 10,000 volts at radio frequency between the windings. The primary consists of a copper tube conductor passing through the centre of the ring-type core, while the secondary is wound around this core. The secondary is intended to operate at ground potential, while the primary may carry current at radio frequency with a potential as high as 10,000 volts effective value with respect to ground. All transformers are designed for 5 amps maximum secondary current. Illustrations of the two types described are shown.

R272.—A RADIO FIELD-STRENGTH MEASURING SYSTEM FOR FREQUENCIES UP TO FORTY MEGACYCLES.—H. Früs and E. Bruce. (*Proc. Inst. Radio Engineers*, Vol. 14, August, 1926, pp. 507—519.)

The apparatus is a double detection receiving set which is equipped with a calibrated intermediate frequency attenuator and a local signal comparison oscillator. The local signal is measured by means of the intermediate frequency detector which is calibrated as a tube voltmeter.

R300.—APPARATUS AND EQUIPMENT.

R337.—MERCURY ARC RECTIFIERS.—A. B. Goodall. (*Q.S.T.*, Vol. 10, August, 1926, pp. 8—11.)

An account of some reliable arrangements recently developed at Washington.

R340.—THE POWER SUPPLY OF WIRELESS SETS.—P. Tyers. (*Electrical Review*, 20th August, 1926, p. 299.)

Present methods for obtaining filament and high-tension supply from the electric lighting mains are stated to be complicated, not universally applicable to every type of receiver, and not fool proof.

Digitized by Google

A device is required which, when plugged into the mains, can be substituted immediately for the ordinary filament accumulator and high-tension battery, without necessitating any change in the wiring of a set or the use of special valves. "Anyone who succeeds in producing some arrangement at a competitive price should be assured of a very ready market."

R340.—SENSITIVE VALVE RELAY.—G. Blake. (*Wireless World*, 11th August, 1926, p. 188.)

R340.—COMPLETE SUPPRESSION OF A SINGLE FREQUENCY BY MEANS OF RESONANT CIRCUITS and REGENERATION. J. Stratton. (*Journal of the Optical Society of America*, Vol. 13, July, 1926, pp. 95—105.)

Discussion of the possibility of suppressing a given frequency by both tuned grid and tuned plate circuits. Curves are shown which indicate a greater sharpness of tuning for the tuned grid than for the tuned plate circuit. This may be accounted for by the fact that whereas the condenser of the tuned grid circuit is shunted only by the very high input resistance of the valve from grid to filament, the condenser of the tuned plate circuit is shunted by the internal plate resistance which is relatively low compared with the resistance of the condenser. From this point of view the tuned grid is preferable to the tuned plate circuit.

R343.—PROBLEMS IN BROADCAST RECEIVER DESIGN.—P. P. Eckersley. (*E.W. & W.E.*, August, 1926, pp. 499—507.)

A lecture delivered before the Radio Society on 26th May, together with the discussion that followed.

R343.7.—OPERATING RECEIVING FILAMENTS WITHOUT BATTERIES.—R. Kruse. (*Q.S.T.*, Vol. 10, August, 1926, p. 25.)

R344.9—LE QUARTZ OSCILLANT ET SES APPLICATIONS À LA T.S.F.—J. Quinet. (*Radio Revue*, Vol. 5, August, 1926, pp. 114—127.)

A reprint of a paper read before the Radio Club de France in May, 1926. The first part of the paper is devoted to the theory of piezo-electricity in general and to the case of quartz in particular. The second part of the paper describes an important application of the quartz oscillator (due to Prof. Langevin) to submarine signalling, and the location of obstacles under water, depth of the sea, etc. The principle is to send out a wave towards the obstacle and receive the echoed or reflected wave, when the distance can be calculated. The method described utilises the vibrations of a quartz oscillator of suitable dimensions as a means of creating, in the water, waves of compression as of sound waves but of ultra audible frequency. The oscillator also acts as a receiver of the reflected wave, so that the time of emission and return can be studied. Illustrations and diagrams of the apparatus are given.

The third part of the paper first describes the application of the quartz crystal to various measurements, *e.g.*, as a manometer, electrometer, oscillograph, etc. The use of the crystal for the generation of oscillations is then considered. The standard forms of quartz oscillator circuit are illustrated and discussed, and a complete transmitter shown, using quartz as master control, with radio-frequency, power amplification to a tuned aerial. The application of the crystal to correction of a wavemeter is also discussed, and the paper concludes with notes on the preparation of the quartz for use as an oscillator.

R344.9.—USES AND POSSIBILITIES OF PIEZO-ELECTRIC OSCILLATORS.—A. Hund. (*Proc. Inst. Radio Engineers*, Vol. 14, August, 1926, pp. 447-469.)

A survey of what is known about piezo-electric oscillators, the following conclusions being drawn:—

1. Experiments with quartz plates show that they can be used in a valve circuit for producing radio-frequency currents of fixed frequencies bearing a definite relation to the dimensions of the plate.
2. The piezo oscillator can be used together with an auxiliary generator for standardising a frequency meter.
3. A single piezo-electric plate can be employed as a standard for the entire range of frequencies used in radio communication.
4. By using special arrangements a small plate can be employed for producing audio-frequency currents.
5. Methods are given for grinding a plate accurately to a given frequency.
6. Formulæ are given in designing plates to a direct frequency to a fair degree of accuracy.
7. Other miscellaneous applications are described.

R384.1.—A SHORT WAVE WAVEMETER.—A. E. Tubbs. (*E.W. & W.E.*, August, 1926, pp. 479—482.)

R400.—SYSTEMS OF WORKING.

R423.—A 20-40-80 METRE CRYSTAL-CONTROLLED TRANSMITTER.—L. Root. (*Q.S.T.*, Vol. 10, August, 1926, pp. 33—35.)

R430.—BEHAVIOUR OF RADIO RECEIVING SYSTEMS TO SIGNALS AND TO INTERFERENCE (Abridged).—L. J. Peters. (*Journ. Amer. Inst. Elect. Engineers*, August, 1926, pp. 707—716.)

The following synopsis is given:—

This paper develops a point of view and method by means of which it is possible to arrive at many of the transient effects occurring in radio systems by a consideration of steady-state properties alone. The scheme is to replace the voltages in radio receiving systems due to interference and signals by a group of generators having the correct voltages and frequencies. These generators can be thought of as having been in the circuit for an indefinitely long time, so that only the steady-state response of the system need be considered.

Digitized by Google

The generators which replace the voltages induced in an antenna by interrupted continuous wave stations, by spark telegraph stations, by telephone stations and by static are worked out. The desirable properties of radio receiving systems for receiving various types of signals through interference are arrived at and an ideal system is described which may be used as a standard of reference for judging the merits of any actual frequency selecting system. It is shown that this ideal system reduces the interference from all sources to the smallest possible value which can be obtained in a system which makes use of frequency selection to reduce interference. The paper thus arrives at the degree to which interference can be mitigated by frequency-selection methods. In order to illustrate the method of treating actual systems, calculations are given for a simple series receiver. The interference caused by transmitting stations of various types and by static is discussed and the factors determining such interference are pointed out.

R435.—CIPHER PRINTING TELEGRAPH SYSTEMS FOR SECRET WIRE AND RADIO TELEGRAPHIC COMMUNICATIONS.—G. S. Vernam. (*Bulletin Reprint B-198 Bell Telephone Laboratories*, June, 1926.)

The paper describes a printing-telegraph cipher system developed during the war for the use of the Signal Corps, U.S. Army. The system is so designed that the messages are in secret form from the time they leave the sender until they are deciphered automatically at the office of the addressee. The operation of the equipment is described, as well as the method of using it for sending messages by wire, mail or radio. The paper also discusses the practical impossibility of preventing the copying of messages, and the relative advantages of various codes and ciphers as regards speed, accuracy and the secrecy of their messages.

R500.—APPLICATIONS AND USES.

R500.—ELECTRICAL COMMUNICATION.—H. Charlesworth. (*Journ. of the Amer. Inst. Electrical Engineers*, August, 1926, pp. 737—742.)

Report of Committee on Communication presented at the annual convention of the A.I.E.E., at White Sulphur Springs last June.

As concerns radio telegraphy, mention is made of a new service between the Dutch East Indies and San Francisco and also from New York to Holland for handling through traffic from Java.

The work of decreasing the use of spark transmitters with their corresponding interferences has progressed to such an extent that over 150 American merchant ships are now equipped with valve transmitters.

The use of the radio direction finder for navigation is rapidly increasing and has passed the experimental stage. The Great Lakes are leading in this respect, due to the demonstration of the particular value of this apparatus in the difficult navigation problems inherent in the Great Lakes.

With regard to radio telephony, the two-way conversation tests between England and the United States are of course referred to, of which we have had full accounts.

The research of radio propagation is stated to have confirmed the existence of a positive ionisation gradient in the upper atmosphere, postulated independently by Kennelly in America and Heaviside in England. Short wave experiments show that the "skipped" distance, in general, increases with increase of transmission frequency and is greater at night-time than by day. These phenomena are explained by the waves received at a distance being deflected downwards by an upper ionised region of relatively low index of refraction and low attenuation.

The observed indications of rotation in the plane of polarisation and directional errors find a qualitative explanation when due account is taken of the fact that the earth's magnetic field, acting upon the free electrons, will change the velocity of the wave and produce rotation. This effect is especially marked in the vicinity of 214 metres, which corresponds to the resonant frequency of an electron in the earth's magnetic field.

Investigations of fading and signal distortion show that they are closely related to the high degree of frequency selectivity exhibited by the radio medium.

An observed variation of signal strength during magnetic storms is significant, the effect being a reduction of the normal signal strength by night and an increase above normal by day.

That increasing use is being made of the short wave range is evidenced by the continued increase in the number of short wave licences issued to commercial concerns. Experimental work indicates the possibility of twenty-four-hour telegraph service with short waves over distances of several thousands of miles. The transmission varies largely with the time of day, however, one frequency transmitting much better for one period of the day and another frequency for another period, so that the use of several wave frequencies appears to be required to give uniform operation.

Reports are also given on radio broadcasting and the electrical transmission of pictures.

R510.—WIRELESS AT SEA.—J. Slee. (*Electrician*, 30th July, 1926, pp. 124 and 132.)

An account of recent development in apparatus employed on board merchant ships.

R514.—A UNICONTROL HIGH-FREQUENCY RADIO DIRECTION FINDER.—F. Dunmore. (*Bulletin No. 525, U.S. Bureau of Standards.*)

The development of such a direction-finder enabling a ship to readily locate another ship, is described, and its installation on a coastguard patrol boat. The direction-finder coil consists of four turns of ignition cable wound on a 20-in. frame. A tuning unit and coupling transformer have been designed so that the coil may be used on the ship's receiving set without changing its tuning adjustments, which are locked in the two 100kC position. The controls necessary when taking a bearing are reduced to one—that of rotating the direction-finder coil to obtain the minimum signal.

Digitized by Google

R514.—WIRELESS POSITION-FINDING ON SHIPS.—L. B. Turner. (*Electrician*, 30th July, 1926, pp. 127 and 128.)

A discussion of the results of recent investigation by the Radio Research Board.

R514.—MARINE DIRECTION-FINDING—L. Bainbridge-Bell. (*Electrician*, 30th July, 1926, pp. 125—126.)

Description of the latest development of the Radio Communication Company's apparatus, which works on the Robinson principle, and the methods of operation.

R540.—SHORT-WAVE RADIO IN THE ANTARCTIC.—L. Jenssen. (*Q.S.T.*, Vol. 10, August, 1926, pp. 12—14.)

It is related how, with comparatively low power on short waves, the Ross Sea Whaling Expedition was able to maintain nightly contact with the rest of the world, whereas before, when the longer waves had been relied on, the Expedition was cut off most of the time.

R545.—LA PRATIQUE ET L'EXPÉRIENCE DE L'EMISSION.—M. Sacazes. (*Radio Revue*, Vol. 5, August, 1926, pp. 128—134.)

A note on the author's work during the past three or four years on small power transmitters. Descriptions are given of the results obtained with several different circuits, the systems shown being a Mesny symmetrical circuit, a Colpitt's circuit, a master oscillator with power amplifier, etc. Remarks on adjustment and operation are given.

R582.—RADIO PICTURE TRANSMISSION.—F. Schröter. (*Electrical World*, 17th July, 1926, p. 129.)

Abstract of article in *Zeitschrift des Vereines Deutscher Ingenieure*, 70, 22, pp. 725—732.

A new process of transmitting line drawings or photographs over wires or by radio is described. Judging from the six samples reproduced, the process is much superior to that employed in America. The perfect results obtained are ascribed to a highly efficient photo-electric cell and a receiving apparatus free from inertia. The former is a potassium cell in a toroid-shaped glass bulb which reacts on reflected light instead of light passing through a transparency. The receiving element is a Kerr cell, based upon the hitherto not utilised physical fact that polarised light passing through nitro-benzol between electrically charged condenser electrodes suffers double refraction, the degree of which is influenced by the electric charge. The photo-electric cell responds to frequencies as high as 10^5 cycles, while the Kerr receiver does not lag appreciably for 10^8 cycles. It is therefore possible to transmit a picture 4 in. × 4 in. in size within 5 seconds. It is further possible to transmit a motion picture with 10 frames per second, which makes television readily possible.

R586.—TELEVISION AN ACCOMPLISHED FACT.—A. Dinsdale. (*Radio News*, September, 1926, pp. 206, 207, 280 and 282.)

Description of the apparatus invented by J. L. Baird.

R600.—STATIONS: DESIGN, OPERATION AND MANAGEMENT.

R624.—SERVICING OF BROADCAST RECEIVERS.—L. Manley and W. Garity. (*Proc. Inst. Radio Engineers*, Vol. 14, August, 1926, pp. 541—566.)

A paper attempting to group service problems under general classifications, prescribing methods of diagnosing them followed by a prescription for correcting them.

R616.5.—"KDKA."—D. Little and R. Davis. (*Proc. Inst. Radio Engineers*, 14, 4, August, 1926, pp. 479—506.)

Description of the latest equipment in use at this station, both for regular broadcasting and for short-wave international broadcasting and relay work. An account is also given of the short-wave transmitter employed for interworks telegraph service.

R622.—WAVELENGTH REORGANISATION. (*Electrical Review*, 13th August, 1926, p. 264.)

The Office International de Radiophonie, Geneva, announces that after 18 months' work, an agreement has been ratified concerning the repartition of wavelengths in Europe. The problem was to fit 200 stations (erected and projected) in a waveband wherein there would be only room for 99 if each station were given a different wavelength. It has been decided to employ 83 exclusive and 16 common waves. The former are divided among the different countries of Europe according to their requirements, Great Britain having 9, and the latter will be shared by 117 low power stations serving limited areas.

R800.—NON-RADIO SUBJECTS.

534.—METHODS OF HIGH QUALITY RECORDING AND REPRODUCING OF MUSIC AND SPEECH BASED ON TELEPHONE RESEARCH.—J. Maxfield and H. Harrison. (*Bell System Technical Journal*, v. 3, July, 1926, pp. 493—525.)

A detailed analysis of the general requirements of recording and reproducing sound without appreciable distortion. It is pointed out, at length, how many of the hitherto unsolved problems of sound recording and reproduction have been readily solved by the application of a detailed knowledge of telephone transmission theory.

534.—THE POWER OF FUNDAMENTAL SPEECH SOUNDS.—C. Sacia and C. Beck. (*Bell System Technical Journal*, July, 1926, pp. 393—403.)

A continuation of work on speech power by means of oscillographic studies of vowels, semi-vowels and consonants. A previous paper considered the characteristics of a few individual sounds from the power standpoint, but the principal emphasis was placed upon speech as a whole. In this later analysis, sounds are considered individually on the basis of instantaneous and mean power. A practical application of the results is suggested.

Digitized by Google

535.3.—DIE PHOTOZELLE NACH ZWORYKIN. (*Zeitschrift des Vereines Deutscher Ingenieure*, 70, 22, p. 732.)

Description of a new photo-cell, discovered by the Russian physicist Zworykin, which is a combination of a valve and a light cell, and can be employed to start machines, etc., since it controls relatively strong currents.

535.3.—THE ALKALI METAL PHOTO-ELECTRIC CELL.—H. Ives. (*Bell System Technical Journal*, v. 2, pp. 320—335.)

537.—THE COSMIC HARNESS OF MOVING ELECTRICITY.—M. Pupin. (*Journ. Amer. Inst. Elect. Engineers*, August, 1926, pp. 758—761.)

Presidential address delivered at the annual convention of the A.I.E.E., White Sulphur Springs, last June.

537.—CONTEMPORARY ADVANCES IN PHYSICS—XI. IONISATION.—K. Darrow. (*Bell System Technical Journal*, v. 5, July, 1926, pp. 463—492.)

621.355.01.—A NEW THEORY OF THE LEAD ACCUMULATOR ?—Prof. Howe. (*E.W. & W.E.*, August, 1926, pp. 466—468.)

621.353.—DRY CELLS FOR WIRELESS PURPOSES.—R. L. Smith-Rose. (*Wireless World*, 28th July, 1926, pp. 117—119.)

Length of life that may be expected from H.T. and L.T. batteries.

Esperanto Section.

Abstracts of the Technical Articles in our last Issue.

Esperanto-Sekcio.

Resumoj de la Teknikaj Artikoloj en nia lasta Numero.

R000.—RADIO ĜENERALE.

R050.—RESUMOJ KAJ ALUDOJ.

Kompilita de la *Radio Research Board* (Radio-Esplorada Komitato), kaj publikigita laŭ aranĝo kun la Brita Registara Fako de Scienca kaj Industria Esplorado.

R100.—ĜENERALAJ PRINCIPOJ KAJ TEORIO.

R127.2.—OFTAJ ERAROJ EN KONDENSATORAJ KALKULADOJ.—E. H. W. Banner.

Oni montras, ke la kutimaj esprimoj por la kalkulado de la kapacito de kondensatoro laŭ ĝiaj korpaj dimensioj ne kunkonsideras la modifiĝon kaŭze de la "randaj" efektoj. Ci tiuj estas nur nekonsiderindaj kiam la proporcio de la "plata surfaco" rilate al "distanco aparta" estas tre granda. Por la korekto, kiam ĉi tio ne estas, esprimoj estas donitaj, kiuj traktas pri kondensatoraj de rondaj kaj rektangulaj platoj. Oni ankaŭ rimarkigas pri la efikoj de la vera dikeco de dieleltriko kaj de variado je la valoro de dielektrika konstanto.

R161 & R162.—LA AMPLIFADO KAJ SELEKTIVECO DE NEŬTRALIGITA AGORDITA CIRKVITO ANODA.—D-ro. N. W. McLachlan.

Larĝa revuo de la neŭtraligita agordita cirkvito anoda laŭ la duala vidpunkto pri la faktoroj kiuj regas ŝtupan amplifadon kaj selektivecon respektive. Post enkonduka revuo pri la neŭtraliga principo, la aŭtoro pasas al amplifo de la kompleta ŝtupo. Ekvivalentaj cirkvitoj estas diskutitaj matematike kaj rezultoj montritaj por efektivaj valvaj amplifiĝoj dum kapacito trans fiksa bobeno estas altigita por plilongigi la ondolongon, kaj dum kapacito estas altigita kaj indukteco malgrandigita por teni la agordecon je konstanta ondolongo. La rezultoj de valva rezisteco p kaj volta faktoro m estas ankaŭ diskutitaj, kaj oni montras, ke amplifo malgrandiĝas ĉe pligrandiĝo de p, se m restas konstanta, kaj grandiĝas ĉe pligrandiĝo de m, se p restas konstanta. Koncerne selektivecon, oni montras rezonancajn kurvojn por ilustri la diversajn statojn diskutitajn. Laŭ nuna okazo, oni konkludas, ke la rezultoj de l'faktoroj cititaj estas ĝuste kontraŭaj de iliaj rezultoj je l'okazo de amplifado.

R200.—MEZUROJ KAJ NORMOJ.

R218—SENDADOJ DE SENFADENAJ ONDOJ DE NORMAJ FREKVENCOJ EL LA NACIA FIZIKA LABOREJO (Brita).

Komunikaĵo de la Brita Registara Fako de Scienca kaj Industria Esplorado.

Pro la rekomendo de la Radio-Esplorada Komitato de la Departemento, plioftaj sendadoj de ondoj de normaj frekvencoj estas farotak el de la Nacia Fizika Laborejo, Teddington, Anglujo (Voksignalo 5HW).

La sendadoj estas laŭjene :—

(A) Mallongonda programo dum la unua mardo en ĉiu monato, de 1,500 horo ĝis 1,600 horo, Tempo de Greenwich, la frekvencoj sendotaj estanta 260, 300, 360, 500, 580, 700, 840, kaj 960 kilocikloj.

Digitized by Google

(B) Longonda programo dum la tria jaŭdo en ĉiu monato, la frekvencoj sendotaj estantaj 30, 40, 50, 66, 86, 115, 160 kaj 200, kC.

Oni faras rimarkigojn pri la ricevado de normaj ondoj kaj ilia utileco dum normigado.

R251.—KONTINUKURENTAJ INSTRUMENTOJ EN SENFADENAJ APARATOJ.—J. F. Herd.

La aŭtoro unue konsideras la bezonon por preciza scio pri kontinukurentaj valoroj kaj alĝustigoj ĉe senfadena ricevilo, speciale se kvanta laboro estas necesigita. Li tiam montras kiel, per aranĝo de ĵakoj (de la ordinara telefona modelo), unu K.K. instrumento, kiel ekzemple, taŭga milliampermetro, estas uzebla por apliko al diversaj cirkvitoj. La aranĝoj montritaj enhavas mezuron de anoda kurento, de filamenta aŭ potenciometra tensio, filamenta kurento, k.t.p. Oni ankaŭ aldonas ĝeneralajn rimarkigojn pri l'aranĝoj.

R.251.—AMPERMETRA PANELO. E. C. Atkinson.

La artikolo priskribas panelon por utiligi ampermetron por diversaj celoj. Pere de ŝtopiloj (laŭ modelo de Wheatstone'a Ponto), plenskalaj gradaroj de 3.0, 0.6, kaj 0.024 amperoj estas haveblaj, dum la instrumento estas ankaŭ utiligebla por legi 3 kaj 12 voltojn. La ŝarĝa kurento por akumulatoro estas ankaŭ montrebla sur unu skalo, kaj filamenta kurento sur alia, sen ŝanĝo de konektaĵoj.

R300.—APARATO KAJ EKIPAĴO.

R384.—APARATO POR KONTINUKURENTA PROVADO. —T. S. Skeet.

La artikolo pritraktas la utiligon de movbobena instrumento (Weston'a Modelo 301, plena skalo montranta ĝis 5 m.a.) kiel voltmetron montrantan 1000 v., 100 v., 10 v., 5 v., 0.5 v., kaj 0.1 v., kaj kiel ampermetron montrantan 10A., 5A, 2.5A, 500mA, kaj 50mA. La instrumento estas muntita en skatolo kun bornoj kaj komutatoroj por la reguligo de la bezonitaj seriaj kaj ŝuntaj rezistancoj, kaj la kompleta instrumento estas ilustrita kaj priskribita.

R.385.—LA KLAVARANĜOJ DE VALVAJ SENDILOJ. —W. T. Ditcham.

Bonega priskribo estas donita pri moderna praktiko rilate al la enkonduko de klavaj interuptoroj en valvaj sendiloj. Tiaj sendiloj estas dividitaj en du klasojn, (A) Memekscitaj oscilatoroj, (B) Amplifikatoroj ekscititaj de mastra oscilatoro, kaj oni donas ilustrajojn de diversaj klavaj motodoj por ĉiu. En la unua klaso, la metodoj montritaj enhavas aranĝojn por utiligo ĉe aparatoj ĝis 5 K.V., kaj por potencoj ĝis 20 K.V., je rapideco de 60 vortoj ĉiuminute, kaj de 100 v.ĉ.m. En la klaso de mastra oscilatoro, oni montras metodojn por klavi longtrafajn rapidegajn komercajn staciojn uzantajn rektifitan Alternkurenton por potencoprovizo, ekzemple, la Marconi'aj stacioj ĉe Ongar, Essex, Anglujo. Fine, oni diskutas klavajn metodojn por altpotencaj stacioj provizitaj per Kontinukurenta Alta Tensio. Klaraj ilustrajoj pri la diversaj metodoj estas presitaj tra l'artikolo.

R500.—APLIKOJ KAJ UZOJ.

R545.009.2.—AMATORA LONGDISTANCA FUNKCIADO. —H. N. Ryan. Perioda kontribuaĵo pri la temo de longdistanca funkciado.

R600.—STACIOJ : DESIGNA, FUNKCIADO, KAJ ADMINISTRADO.

R616.5.—RADIO-VIENO.—Prof. G. W. O. Howe.

Tre kompleta priskribo pri la nova altpotenca Brodkasta Stacio ĉe Vieno. Oni donas planojn de la antena kaj kontraĵeza aranĝoj, dum diagramoj montras la konektaĵojn de la sendilo, amplifikatoroj, modulaj metroj, k.t.p. Fotografaj ilustrajoj montras la staciajn konstruaĵojn, la sendilon, valvojn de la diversaj tipoj uzataj, reguligan panelon, amplifikatorojn, modulajn metrojn, k.t.p.

La stacio uzas la mastro-oscilatoran funkcimetodon, kun potenca amplifado per akve malvarmigitaj valvoj. Rektifita Alternkurento provizas la altan tension. La senilo estas ses mejloj malproksime de la mikrofonejo en Vieno, al kiu ĝi estas ligita per speciala kablo. La aparato ĉe la mikrofoneja konstruaĵo konsistas el, krom la meikrofono, triŝtupa amplifikatoro, plua unuŝtupa amplifikatoro, amplifikatora modula metro kontrolanta la parolan kurenton senditan tra la kablo. Estas ankaŭ sendila modula metro funkciigita de kurentoj senditaj tra la kablo el de la senda stacio, tiel ke la antena modulado estas observebla ĉe la mikrofonejo.

R800.—NE-RADIAJ TEMOJ.

510.—MATEMATIKO POR SENFADENAJ AMATOROJ. —F. M. Colebrook.

Daŭrigo de la serio el antaŭaj numeroj. La nuna numero traktas pri Indicoj, kun la Difino de Indico, Indica Leĝo, Negativaj Indicoj, Ripetitaj Produtoj de Potencoj, Produtoj de Potencoj kaj Kvocientoj, Radikoj, Produto de Radikoj, la Plena Generalizo de Indica Formularo, k.t.p.

Digitized by Google

Correspondence.

Letters of interest to experimenters are always welcome. In publishing such communications the Editors do not necessarily endorse any technical or general statements which they may contain.

Plate-Current, Plate-voltage Characteristics.

To the Editor, E.W. & W.E.

SIR,—Your contributor Mr. E. Green makes an error on pp. 370, 471 of the August issue of *E.W. & W.E.*, which is a very common one. The valve is a voltage operated device, and we spend our existence trying to get the biggest *voltage* amplication from valve to valve.

No power is present in the secondary of a transformer or tuned coupling unless there is grid current or charging current and in either of these cases the grid filament voltage is cut down by the $I\ R$ voltage drop.

No power is taken from the primary and so the transformation is a pure voltage transformation and the greater the voltage across the primary the greater the overall amplification. The greater the primary impedance the greater the fraction of μ that is utilised.

Theoretically then, infinite impedance and an infinite step up would be ideal. In practice one is limited by intercapacities and space considerations, but still the main law holds good that the transformer should be of the utmost possible impedance and not of equal impedance with the valve as it would have to be for maximum power amplification.

The matter is totally different when the last valve driving the loud-speaker is under consideration. Here power is required to move the air and the best power output is obtained when the load impedance equals that of the valve.

Here again, practical details upset any attempt at maximum efficiency. The matching of impedances only holds good at one frequency, the impedance is changed at every alteration of the air-gap in the loud speaker, and the makers give us only the D.C. resistance in ohms!

In support of my views of the above, I would refer you to articles which have appeared in the *Wireless World*, "The Resistance-Coupled Amplifier," by Dr. H. Kröncke, 23rd September, 1925. "Everyman's four-valve," by W. James, 28th July and 4th August, 1926. They are using resistance amplification with a resistance of 1 megohm, grid-leak of 5 megohms, coupling condenser of .0003μF, and a plate current of *a few microamps*. They are in fact employing the principles of pure voltage amplification.

I do not know who started the error originally, but it is certainly time it was laid to rest..

I. A. J. DUFF, B.A., A.M.Inst.C.E.

To the Editor, E.W. & W.E.

SIR.—With reference to the remarks of your correspondent, Mr. I. A. J. Duff, we are both agreed that the valve is a voltage operated device, and the biggest voltage amplification from valve to valve is what is normally aimed at. I note that the two articles he mentions as supporting his views on tuned circuit and transformer amplifiers, both deal with resistance amplification.

In the case of a tuned circuit amplifier, as shown in my figure 6 (*b*) (*c*) and (*d*), used for amplification at one definite frequency, the power output of the valve is used to maintain the oscillating current in the tuned circuit, and obviously maximum power output will give the maximum voltage across the condenser.

The case of the transformer amplifier, as Mr. Duff says, is not so simple, and the theory I gave was reproduced from memory from an article by Mr. Catterson Smith published in the *Radio Review* of July, 1920. I find on referring to the article that he did not consider the case where grid current was eliminated.

The simple theory that the transformer load is made equal to the anode A.C. resistance of the valve must be abandoned, nevertheless Mr. Duff's statements require some correction. If they were true we could fix on a standard transformer which would be best for all types of valve. In fact, however, the step-up ratio of the modern type of transformer is arranged so that the transformer load has a definite ratio to the anode A.C. resistance of the valve in use. In proof of this I would refer Mr. Duff to an abstract of a paper by Mr. P. W. Willans, on "Low Frequency Inter-valve Transformers," published in *E.W. & W.E.* for July, 1926. The transformers described were made with a fixed secondary winding, and as regards the primary winding, I quote the following from page 437—"Four different ratios were specified, *i.e.*, 2.7 : 1 for a 40,000 ohm valve, 4 : 1 for a 16,000—18,000 ohm valve, 6 : 1 for a 7,000 ohm valve, and 8 : 1 for a 4,000 or 5,000 ohm valve."

The remarks on the valve driving the loud-speaker do not call for any comment.

E. GREEN.

Valve Nomenclature.

To the Editor, E.W. & W.E.

SIR,—With reference to your paragraph on "Valve Nomenclature" (differential resistance) in your Editorial of the current issue, I suppose it is too late, now, to raise objections to the term "Anode A.C. resistance." But it appears to me that, though this term is better than "impedance," it is still misleading, and ambiguous.

If we consider the case (which frequently occurs) of a valve with anode differential resistance R_a, having an inductance L in its anode circuit—the static differential resistance of the whole circuit will $= R_a$, but the dynamic dif. res. will $= R_a + \omega L$.

The expressions "dynamic" and "static differential

Digitized by Google

resistance" seem to me to be reasonable; but if we substitute "A.C. resistance" for "differential resistance," we have "static A.C. resistance," which is a contradiction in terms.

This objection seems to me to be real and not merely superficial. The quantity "differential resistance" is not dependent on A.C.

If "differential resistance" is too long or obscure, would not "slope resistance" be better than A.C. resistance?

Surrey. R. ST. Q. LENG.

[Our correspondent is incorrect in assuming that the whole circuit would have a "dynamic differential resistance" of $R_a + \omega L$. This is the impedance of the circuit at the frequency $\omega/2\pi$; there is no such thing as a dynamic differential resistance, it is essenially static, being determined from the slope of the static characteristic curve. It is for this reason that we think that either "differential resistance" or "slope resistance" preferable to the adopted term "A.C. resistance." If a valve had any property resembling skin effect, the A.C. resistance would not be exactly the same thing as the differential resistance, but so far as we know the two things are identical.

It is not too late, however, to raise objections to the contents of the Glossary of Terms used in Electrical Engineering, recently issued by the British Engineering Standards Association. This first edition is regarded as tentative and we ourselves have already objected to many of the terms and definitions.—G. W. O. H.]

Power Losses in Insulating Materials.

To the Editor, E.W. & W.E.

SIR,—In the Editorial in the current number of the *E.W. & W.E.*, there is a reference to a paper of mine entitled "Parasitic Losses in Inductance Coils at Radio Frequencies." You mention the paper of Mr. E. T. Hoch on the subject.

I would like to draw your attention to the sequel of my paper, which appeared in the following number of *E.W. & W.E.* (June, 1925) in which I specially mentioned Mr. E. T. Hoch's paper (page 543) and I quoted the first part of the paragraph that was quoted in your Editorial.

I remember being astonished at the time that so obvious a criterion of the suitability of dielectrics as the product of power factor and dielectric constant was not more generally used and I consider that it would be advantageous if this should become standard practice.

RAYMOND M. WILMOTTE.

London, S.W.10.

A New Theory of the Lead Accumulator.

To the Editor, E.W. & W.E.

SIR,—In your issue of August, on page 468, Dr. Howe describes a "cell which cannot sulphate," which seems likely to be useful for H.T. supply. This appears to be another case of lost knowledge rediscovered, for I remember seeing many years ago an antique "Rochefort" station at Newhaven, Sussex—with a spark like a brick in a bucket and a log. dec. like X's—where they had a battery not unlike that described.

The plates were in the form of saucers and were about a yard across, and were stacked up one inside another, slightly separated by porcelain pieces, with the under side of one in a pool of acid held by the next lower one. This battery was not of negligible capacity, however, as it was used to run a motor alternator.

It appears that the arrangement—which was, I think, of French origin—would fulfil the requirements of M. Féry's new theory as regards freedom from sulphation.

It would be perfectly easy to substitute acid soaked kieselguhr for the earlier free acid since this silicious skeletony stuff has long been used as an absorbent for sulphuric acid, nitro-glycerine and other tasty fluids.

I have much pleasure in sending this recollection for publication in the hope that the Patents Office will give a suitable reception to the inevitable millionaire corporation when it arrives from the land of "bounce" to conduct a 100 per cent. campaign against the pockets of our wireless enthusiasts.

Ashford, Kent. WM. A. RICHARDSON.

Fading and Mountains.

To the Editor, E.W. & W.E.

SIR,—I would like to explain to Mr. Maddison that I introduced the subject of D.C. conductivity because it is a property of real importance when considering a reflecting medium. Moreover it can be and has been measured. For this reason my argument was hardly "futile."

I am sorry to say this manner of so lightly dismissing others' statements pervades Mr. Maddison's subsequent remarks. He makes, in the most casual way, the following exceptionable statements:—

> "The only limiting factor of this rise in pressure is the rate at which the charge will leak——" (The factors limiting the extent of coalescence limit the potential rise.) "The air around the cloud will be very highly ionised——" (Why?) "The extent of this ionisation can rise far higher than in the Heaviside layer for this reason." (What reason? Not the following sentence, which is incorrect). "——the Heaviside layer is *only* ionised by electronic bombardment from the sun." (*Only*, indeed!).

One may be excused for hazarding the opinion that unsupported statements like these are responsible for Mr. Maddison's "first and foremost difficulty."

Nevertheless, I still agree with Mr. Maddison that cloud may have some effect which should be investigated. His implied conception of a cloud as (may we say) a multitude of minute condensers is new. We must ask the mathematicians.

A. WOODMANSEY.

Harrogate.

Digitized by Google

Some Recent Patents. [R008

The following abstracts are prepared, with the permission of the Controller of H. M. Stationery Office, from Specifications obtainable at the Patent Office, 25, Southampton Buildings, London, W.C.2, price 1/- each.

A SHORT-WAVE OSCILLATOR.

(*Convention date* (*U.S.A.*), 17*th February*, 1925. *No.* 247,942).

C. F. Burgess Laboratories and W. H. Hoffman describe in the above British Patent the construction of a rather interesting short-wave oscillator, in which the grid and anode circuits are connected in bridge formation. The invention is of even more interest as it states that very high frequency oscillations, corresponding to a wavelength of a few metres, can be generated with a valve of the normal type, the inter-electrode capacity not being of any great importance. The accompanying illustration shows the general arrangement of the circuit, and it will be seen that there are two similar oscillatory circuits L_1 C_1 and L_2 C_2. The two capacities C_1 and C_2 may be variable condensers mounted on a common shaft so arranged that rotation of the shaft gives substantially equal variation of the capacity of the two condensers. The circuit L_1 C_1 is included in the grid-filament circuit of the valve V, and the circuit L_2 C_2 is included in the anode circuit of the valve V. The stopping condenser K of about 0.003μF is employed to isolate the positive potential of the high tension battery, which is connected between the filament F and one end of the coil L_2. A resistance R, having a value of about 5,000 ohms, is connected between the mid-point of the condensers C_1 and C_2, and one end of the coil L_1 and the far side of the stopping condenser. Thus it will be seen that the resistance R

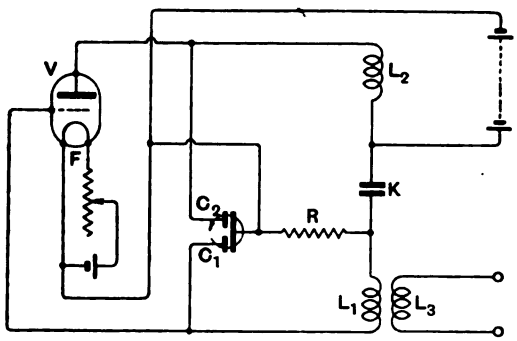

is connected across points of substantially equal potential. The patent specification is fairly detailed, and gives considerable information regarding the arrangement of the circuit and the values of the components. For example, it is stated that the inductances L_1 and L_2 may consist of half a turn of No. 10 S.W.G. copper wire, the radius of the turn being about two inches. An inductance L_3 is shown coupled to the inductance L_1, this inductance L_3 being used to transfer the output of the generator to an aerial or other load circuit.

A LOW-CURRENT RESISTANCE AMPLIFIER.

(*Application dates, 7th April, 9th July, 13th July, and 5th November*, 1925. *No.* 256,299.)

Several resistance amplifiers have recently been devised in which the anode circuits contain resistances of the order of 5 megohms, and the above British Patent, which is the subject of four provisional patent specifications, and is granted to A. H. Midgeley, discloses the arrangement of an amplifier which is the result of experimental work on the lines of the provisional specifications.

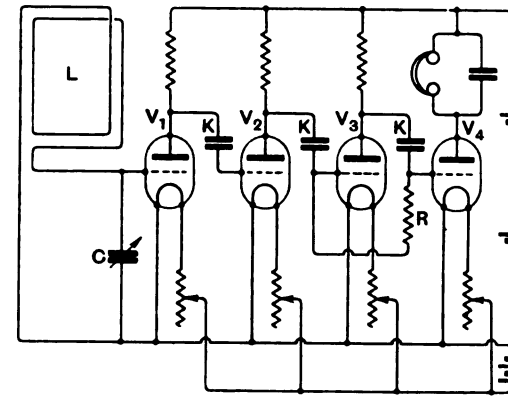

While the invention can be carried out by the use of ordinary valves, it is preferred to use a valve in which the anode is about $\frac{1}{16}$ inch long, and $\frac{1}{4}$ inch in diameter, the valve being provided with a cathode designed to take a current of half an ampere at 0.8 of a volt. The accompanying illustration shows one form of circuit, in which the input circuit of the first special valve contains an inductance L in the form of a frame tuned by a variable condenser C. The first three valves, V_1, V_2 and V_3 are of the special type referred to, and contain anode resistance R of the order of 5 megohms. The anodes are coupled to the succeeding grids by means of coupling condenser K, no grid-leaks being employed. In operation the filament emission is reduced to a point such that saturation occurs at zero grid volts. The potential of the high tension battery may be of the order of 50 volts. The last valve, V_4, which operates the telephones or loud-speaker, is of the ordinary type, and is provided with a grid-leak R, which is connected to the grid of the preceding valve. The specification states the manner in which the amplifier may function. It is believed that the first three valves all act as detector amplifiers. It is further suggested that there is a high-frequency component throughout the amplifier which has a ripple upon it of progressively diminishing amplitude in each stage, while there is

Digitized by Google

also a low frequency component which increases correspondingly in amplitude. The specification is extremely lengthy and detailed, and gives considerable practical information and suggested methods of working.

AN ELLIPTICAL DIAPHRAGM LOUD-SPEAKER.

(*Convention date* (*U.S.A.*), *30th July*, 1924. *No.* 237,878.)

The Western Electric Company Limited and C. E. Lane describe in the above British Patent a rather interesting type of cone diaphragm loud-speaker. Readers are, no doubt, familiar with the patent specification of the Western Electric Company's "Kone" loud-speaker, which consists essentially of two cones joined at their bases, one cone being truncated and fixed to a support, a telephone driving mechanism being located within two cones and driving the apex of the cone by means of a link, a substantially free edge being obtained. It has been found that with a symmetrical arrangement of this description, although responding very uniformly to both the upper and lower frequencies of the musical band, a certain amount of resonance is apt to be set up unless the symmetrical diaphragm is of very considerable area. This difficulty is overcome by the use of a diaphragm of elliptical formation. Thus the general arrangement should be clear by reference to the accompanying illustration. Here two cones C_1 and C_2 are joined at X, X, the cones being of elliptical formation. The cone C_2 is truncated, and is fixed to a supporting member M provided with a base B. The telephone driving mechanism T, such as the well-known balanced armature, drives the apex of the cone C_1 by means of a link L. It is claimed that by an arrangement of this description any resonance effects due to symmetrical vibration are overcome, and thus a more linear characteristic and substantially undistorted reproduction can be obtained.

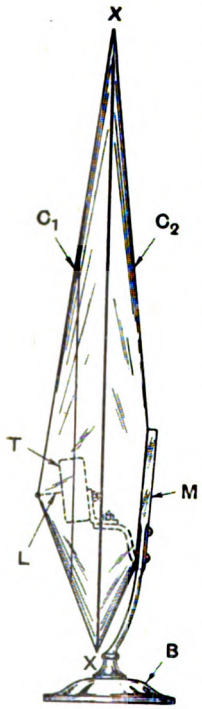

A RADIO-FREQUENCY AMPLIFIER.

(*Convention date* (*Belgium*), *18th October*, 1924. *No.* 241,530.)

A rather interesting form of two-valve receiver which should be of interest to experimenters is described in the above British Patent, which has been granted to J. Abelé and J. H. Berens. The accompanying illustration should make the invention clear. The first valve V_1 acts as a radio-frequency amplifier, and has connected between the grid and filament a tuned circuit L_1 C_1. The second valve V_2 is used as a rectifier and regenerative amplifier. The anode circuits of the two valves contain respectively radio-frequency chokes Z_1 and Z_2. Incoming potentials applied between the grid and filament of the first valve cause amplified potential to be produced across the impedance Z_1, from which they are transferred by a condenser C_3. Another tuned circuit L_2 C_2 is provided, and is arranged so as to act as an auto transformer, the far side of the condenser C_3 being connected to a point E, while the filament is connected to a point F, one end of the tuned circuit L_2 C_2 being connected directly to the grid of the valve V_2, and the other end taken through a variable condenser C_2 to the top of the choke Z_2. The amplified potentials occurring across Z_1 are then transferred to the primary of the auto-coupled transformer, these potentials being detected, and regeneratively amplified by the valve V_2. It will be noticed that the contact point F of the filament is variable,

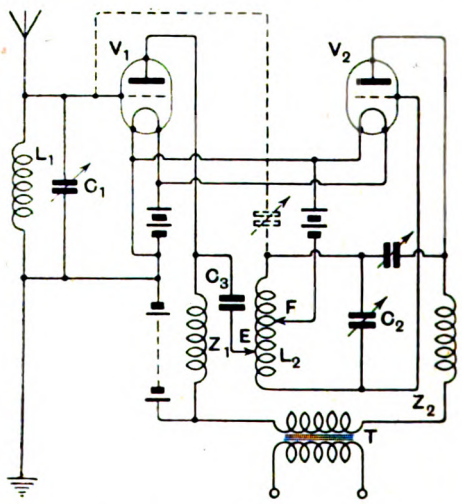

and may constitute a slider working over the inductance L_2. Reaction or self oscillation can be controlled by the reaction condenser and the position of the filament slider F. The specification states that the circuit possesses many advantages, and the degree of reaction is not varied by altering the position of the two tuning condensers. The rectified currents are transferred by means of a low frequency transformer T included in the anode circuit of the second valve.

MULTIPLE EARTH CONNECTIONS.

(*Application date*, *4th May*, 1925. *No.* 256,317.)

It is well known that the use of a multi-earth connection to a radio-frequency receiving system will bring about considerable loss of efficiency unless the earth system is balanced. (It is usually preferred to employ one earth connection.) When a broadcast receiver derives its anode current from electric light supply mains trouble of this nature

Digitized by Google

may arise due to the fact that one side of the mains may be earthed. The above British Patent, granted to Fullers United Electric Works Limited and A. P. Welch, overcomes this difficulty by the introduction of radio-frequency chokes, which tend to keep any radio-frequency currents from the earth connection of the supply mains. The accompanying diagram illustrates a circuit in

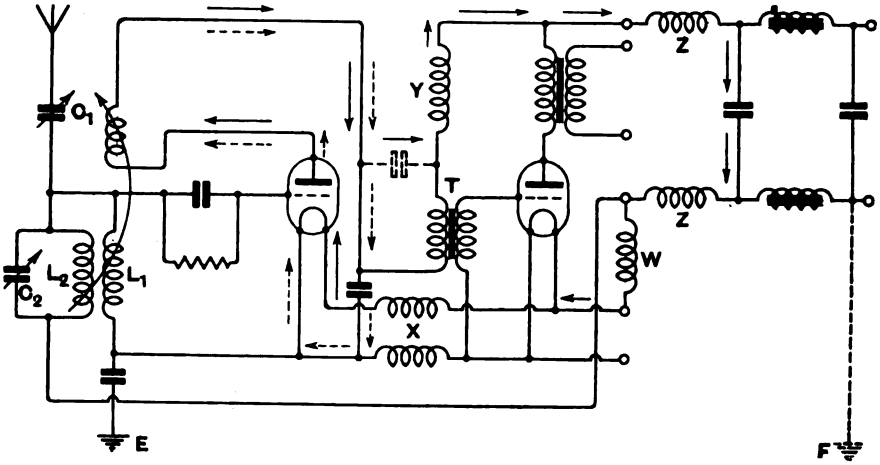

which a number of radio-frequency chokes are inserted in various parts of the circuit. An ordinary two-valve receiver is shown provided with an aerial circuit consisting of a variable condenser C_1, an inductance L_1 and a normal earth connection at E through a stopping condenser, the earth on the mains supply being shown at F. Two radio-frequency chokes Z, Z are shown in the main high-tension leads. Owing to appreciable self capacity across the primary of the first inter-valve transformer T, or the existence of a by-pass condenser across it another choke is shown inserted at Y. Chokes are again shown inserted at X between the filament leads to the two valves. Again another choke is shown at W, and is used in conjunction with a parallel wave-trap circuit L_2 C_2.

A GAS DISCHARGE RECTIFIER.

(*Convention date* (*U.S.A.*), *17th July*, 1924. *No.* 237,236.)

An exceedingly interesting form of full-wave gas discharge rectifier is described in the above British Patent by the British Thomson-Houston Company Limited and E. E. Charlton. The novelty of the invention lies partly in the shape and arrangement of the electrodes, and partly in the filling of the tube. The accompanying illustration shows a very simple form of the rectifying tube, in which the cathode consists of a plate P of nickel, molybdenum, or tantalum. The anodes consist of two wires W, only one of which is visible, of tungsten or nickel, tungsten being preferable owing to its suitability for sealing into the glass foot. The cathode P and the anodes W are mounted on a glass stem or foot S, and a glass tube G surrounds the lower portion of the anode wire so as to prevent any discharge taking place between the bottom of the anode wire and the edge of the plate. The leads from the two anodes and the cathode are brought out to fins on the base of the tube in the usual manner. The tube is filled with a gas which, at the operating temperature of the device, has a density sufficiently high to produce the necessary conductivity by ionisation. In one embodiment of the invention a mixture of helium and neon is employed, but it is stated that helium alone gives better results. The best pressure of the gas depends upon the geometrical features of the device and the voltage at which it is desired to work. It is stated that from 5 to

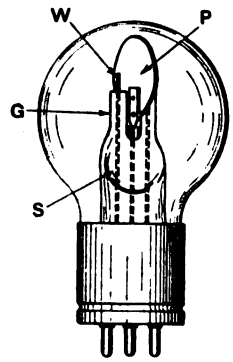

80 mms. of mercury are pressures which are found to be suitable, but helium alone at a pressure of 19 mms. appears to be preferable. The specification states that it is advisable to place in the tube a material which has chemical reaction towards gaseous impurities. Metallic magnesium and calcium are mentioned as being suitable. It is stated that the voltage drop is lowered by about 20 per cent. by observing this precaution, and it

Digitized by Google

may be lowered still further by admitting an alkaline metal such as caesium or rubidium before the magnesium getter is vapourised. The alkaline metal just mentioned is oxidised by admitting oxygen and warming the tube. The oxide then appears to combine with any hydrogen which may be liberated during operation of that tube. The specification, which is very extensive, gives details for the construction of high power tubes in which the cathode is made in the form of two cylinders mounted side by side enclosing the two anodes.

AN INTERESTING CRYSTAL PATENT.

(*Application date, 26th March, 1925. No. 251,078.*)

A rather interesting modification of the carborundum crystal detector associated with a valve receiver is described in the above British Patent by the Carborundum Company. If a crystal detector is used for a powerful valve amplifier it frequently happens that the magnitude of the potentials is such that the detector is not capable of rectifying them properly. It has been found, however, that by suitable treatment of the crystal it can be made to rectify efficiently voltages of an appreciable magnitude. A piece of carborundum or silicon carbide is freed on its surface from any impurities, and one end is coated or sprayed in some known manner with a fine metallic layer of copper or silver, the layer being further built up and soldered into some convenient holder.

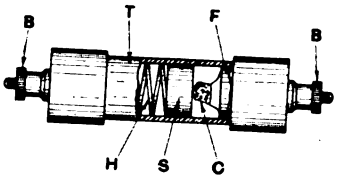

The rectifying end of the crystal is then used in conjunction with a steel plate with which it is held in contact by considerable pressure. A suitable arrangement of the detector is shown in the accompanying illustration, in which it will be seen that the carborundum C is attached as mentioned to a block of metal or solder F, while the other end of the crystal is in contact with a steel plate S, controlled by a helical spring H, the whole being contained within a tube T provided with terminals B.

A FOUR-ELECTRODE VALVE SUPERSONIC CIRCUIT.

(*Application date, 5th March, 1925. No. 252,789.*)

A rather interesting arrangement of two four-electrode valves as a frequency changer is described by H. Andrews and the Dubilier Condenser Company, Limited, in the above British Patent. The invention should be quite clear by reference to the accompanying illustration. The second valve V_2 is arranged as a generator of continuous oscillations to provide the local source and an inductance L_1 and capacity C_1 tuned to the desired local frequency

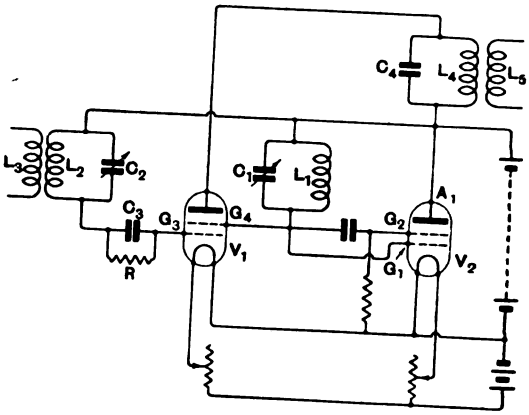

are connected between the anode A_1 and the inner grid G_1. The oscillations thus produced are transferred to the outer grid G_4 of the first valve V_1. The incoming oscillations are introduced to the inner grid circuit of the valve V_1 by means of the tuned circuit L_3 L_2 C_2, a grid condenser and leak C_3 R being used for rectification purposes. The oscillations introduced to the first valve from the second modulate the anode current of the first valve, this anode current further being varied by the applied grid potentials from the circuit L_2 C_2. Thus a beat frequency is obtained in the anode circuit of the first valve, potentials at the beat frequency being produced across the tuned circuit L_4C_4, from which they are passed on to an intermediate amplifier at L_5. The specification also described a somewhat similar arrangement in which only one valve is utilised, one grid being used for the generation of oscillations, and other for dealing with the input voltages.

Readers of E.W. & W.E. *would greatly assist us in our Publishing arrangements if they would* PLACE AN ORDER WITH THEIR NEWSAGENTS *for the regular supply of the Journal, instead of purchasing their copies casually.*

Digitized by Google

EXPERIMENTAL WIRELESS & The WIRELESS ENGINEER

VOL. III. NOVEMBER, 1926. No. 38.

Editorial.

The German Radio Exhibition—General Impressions.

VISITORS to the two preceding Annual Exhibitions in Berlin reported that manufacturers in England had nothing to fear from German competition. In this connection it must be remembered that economic conditions in Germany have been and still are such that the development of broadcasting is likely to be slower than in this country. Until recently, moreover, the Government adopted an unfavourable attitude to the new development. All this is changing very rapidly and the wireless industry shows every sign of healthy development. The broadcasting industry is established on lines somewhat resembling our own, the Post Office collecting the licence fee of two shillings per month and handing over a part of it to the Company. The studios at Vox Haus in Berlin are well equipped and the performers are drawn from the best talent in Germany; the orchestra is one of the best in Berlin and is conducted by one of the leading conductors.

On the technical side they draw on the whole resources of the Telefunken Company, Siemens and Halske and the A.E.G., and no effort is being spared to obtain the best results that modern science can produce. The number of listeners is at present small compared with the number in this country, but this will doubtless change as the struggle for existence becomes less intense among the great mass of the population, and the possession of a receiving set comes to be regarded as something to which an ordinary individual may aspire.

Several of the leading makers exhibited well designed and beautifully constructed neutrodyne and heterodyne sets at prices which seemed to be lower than those ruling in this country for similar sets. Even although most of the stalls are provided with sound-proof rooms for demonstrating their sets with loud-speakers, the conditions were not suitable for making critical tests and was largely dependent on appearance and the naturally somewhat rosy accounts of performance given by those in charge of the stalls. One could have no doubt, however, about the quality of the sets now being exhibited by such firms as Telefunken, Lorenz, Seibt and Huth, the latter of which we understand has been absorbed by the Berliner Telephone Co.

The firms exhibiting simple crystal sets numbered thirty-six, whilst thirty-seven firms showed valve sets. Between them they covered the whole range from sets costing a few shillings to superheterodyne sets at from £30 to £40. The superheterodyne was not nearly so popular as the neutrodyne type of receiver. The Telefunken Co. was showing a new five-valve neutrodyne—the Telefunkon-Gamma with three tuned neutralised circuits, controlled by a single knob, the three condensers

Digitized by Google

being mechanically coupled. The only other controls were a wave-change switch and a loudness regulator. A somewhat similar set by the Magnophon Co. of Dresden had the dial marked with the names of the leading European broadcast stations so that one could tune any of these stations in without bothering about their wavelength. No fewer than forty-eight firms exhibited variable air condensers and among them were many ingenious slow motion devices. One manufacturer stated that they experienced considerable competition from England in this component, one English firm in particular doing a large business in Germany. Many of the better class receiving sets had the coils enclosed in removable trays or shallow drawers, which could be simply taken out and another drawer inserted to obtain a further range of wavelength, thus obviating the handling of the coils themselves. Although about twenty firms were showing rectifiers and apparatus for charging batteries or supplying anode current from the mains, much of the apparatus seemed to be only just emerging from the experimental stage. As was to be expected, headphones and loud-speakers were shown on a great many stalls; there was little novelty among the former but among the latter there was every conceivable construction. Of the forty-one firms showing loud-speakers many had several types and several sizes of each type. In some the sound passed through a trumpet of massive wood, all metal being avoided, whereas in another the sound passed through two turns of 1-in. brass tubing about two feet in diameter before emerging from a brass trumpet. The highest priced loud-speaker was of the hornless type with a cone of thin aluminium foil, made by Seibt and listed at £7 10s. The efforts of some makers in the direction of ornamentation would find little appreciation in this country. Valves were shown by fourteen manufacturers but the only outstanding novelty was the multiple valve of Loewe. Although forty makers exhibited intervalve transformers, few of them could give curves or particulars of performance; generally speaking they were smaller and cheaper than those employed in this country.

There were, of course, a large number of stalls filled with minor accessories, such as terminals, plugs, insulating materials, cabinets, etc., into which we need not enter.

As an example of the prices ruling and the way in which business is being done, the following is a translation of an advertisement in an amateur wireless weekly magazine:—

"We deliver an A1 two-valve set made by Messrs. Schuchhard, for all wavelengths, complete with valves, accumulator, anode battery, cord, and Hallophon Loud-speaker, erected complete with aerial. Six months' guarantee. Reception of foreign stations for 6 monthly payments of £1 or 26 weekly payments of 5s. Representative will call without charge. Demonstrations daily. The entrance price of the Exhibition refunded to every purchaser of a set."

It suggests good value for £6.

In the same magazine is an article on Loud-speakers from which we translate the following paragraph: "In loud-speakers with diaphragms the tone is produced by the vibration of the diaphragm. In loud-speakers without diaphragms, there is no diaphragm to vibrate, but its place is taken by carbon granules which vibrate backwards and forwards." This is from the weekly wireless supplement to the *Berlin Morgenpost* which was distributed at the Exhibition. It is only fair to say, however, that this is far below the standard of the bulk of German popular wireless literature.

Digitized by Google

The Berlin Wireless Exhibition. [R064

Enterprising Methods of German Radio Manufacturers.

THE third annual German Wireless Exhibition was held in Berlin from 3rd to 12th September. The exhibits were confined to German manufacturers, no goods of foreign manufacture being admitted. The exhibition was organised jointly by the State, the City of Berlin, and the "Verband der Funk-industrie," an association of wireless manufacturers. The official opening of the exhibition was made the occasion of the dedication of the new tower which is to carry the Berlin broadcasting aerial and which stands in the exhibition grounds.

The City of Berlin has taken a large tract of land—an old parade ground about five miles from the centre of the city—and set it apart as an exhibition ground. On this land there are now three large exhibition halls, the first of which, "Das Haus der Funk-industrie," was erected two years ago for the purpose of holding the first German wireless exhibition. The idea of the wireless industry of any country erecting their own exhibition buildings as a permanent structure on the outskirts of the capital is so striking, and the actual building presents so many points of interest, that we feel sure our readers will welcome a brief description of the undertaking.

After some discussion it was decided to avoid the use of iron as much as possible and to erect a wooden building. Except for the brickwork of the lower walls the building is almost entirely of wood; but

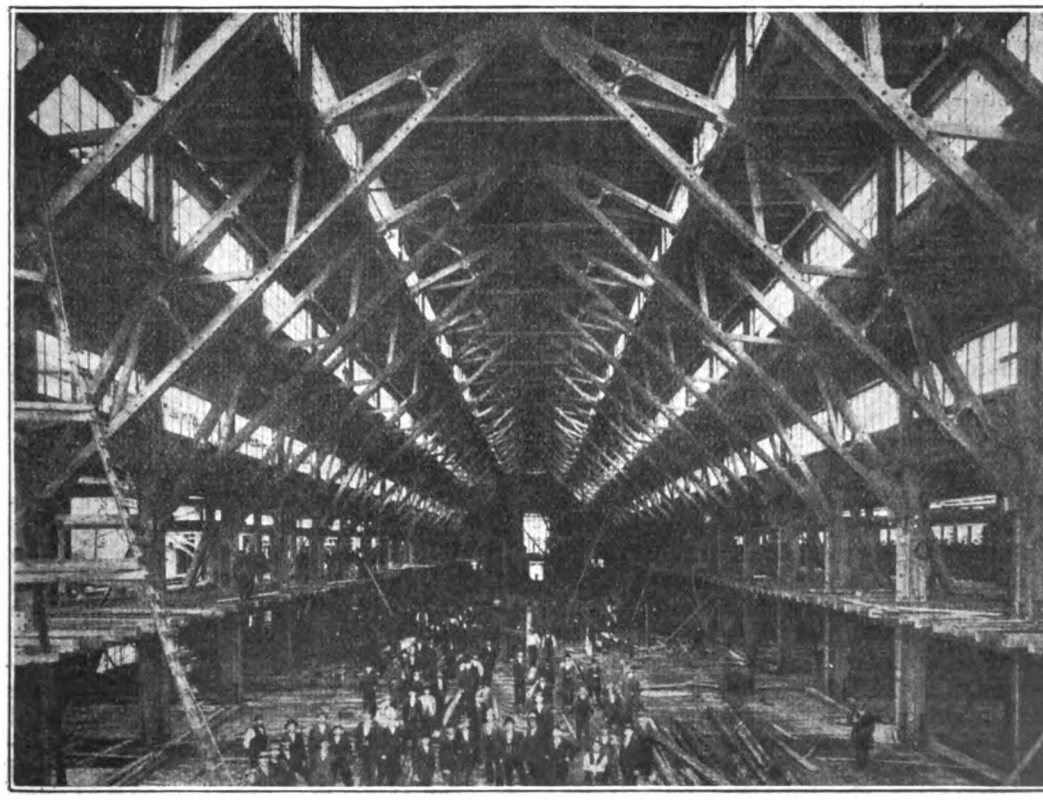

Fig. 1. *The Wireless Exhibition Hall in course of construction.*

Digitized by Google

owing to the wood being encased in fire-proof material, it has the appearance inside of a concrete building. The external appearance is very striking. As the building also houses the Berlin Broadcast Transmitter, an extensive system of earth wires was buried in trenches under the building before putting in the foundations. The main hall is rectangular, 430 ft. long and 136 ft. wide, with a gallery all round. Behind most of the stands, both on the ground floor and on the gallery, are sound-proof cubicles for demonstrating headphones and loud-speakers. During the wireless exhibition the local transmitter is not used, the Berlin broadcast being given from another aerial in a different part of the city. Two wires were stretched from end to end high up under the roof, and from these were hung a large number of receiving aerials, one for each stand if necessary. This hardly commends itself as an ideal arrangement for demonstrating the qualities of receiving apparatus and loud-speakers, although several exhibitors stated that it worked much more satisfactorily than one might have anticipated. We certainly heard many loud-speaker demonstrations without any sign of interference.

One of the most striking things about the exhibition building is the fact that it was completed in three and a half months from the commencement of the work.

The New Berlin Wireless Tower.

The tower has a total height of 453 ft; like the Eiffel Tower, it is self-supporting, but is only about half the height and has not the widely spread base. It has been designed to answer a double purpose, for in addition to supporting the broadcasting aerial, it is to be used as an outlook tower and as an aerial restaurant. At the top is a revolving searchlight which will act as a useful guide to aircraft approaching Berlin. Just below the searchlight is a platform to which visitors are taken by a lift for ten persons; from this platform a very fine view is obtained, the city on one side, the Havel and Grunewald on the other. At a height of 150 ft. a restaurant has been built into the tower with two floors, the upper one being the restaurant proper and the lower one the kitchens, etc. It was intended at one time to insulate the tower from the earth and this would have necessitated special arrangements, but we understand that it has not been decided to work with the tower earthed; we noticed that the careful insulation of the feet of the tower was short-circuited by copper strip running to earth.

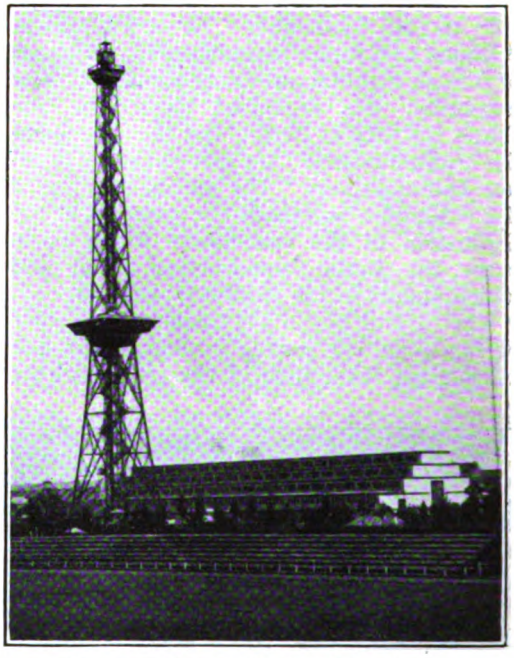

Fig. 2. *The new Berlin wireless tower.*

The Exhibits.

No attempt will be made to review the exhibits in detail, but mention will be made of certain products which seemed of special interest.

The Loewe-Radio Company's Exhibit.

The greatest novelty at the Berlin Exhibition was undoubtedly provided by the Loewe-Radio Company, who made a strong point of their multiple valves. Interest was stimulated first by the low price at which the valves were offered; secondly, by the offer of the company to repair any burnt-out valve for 8s., replacing not only the burnt-out filament, but also the others at the same time; and thirdly, by the announcement that the company had ceased to manufacture their previous types of single valves. The low frequency 3-fold valve

Digitized by Google

type 3NF, containing 3 valves together with the anode resistances, condensers and grid-leaks, all in a single bulb with a six-pin

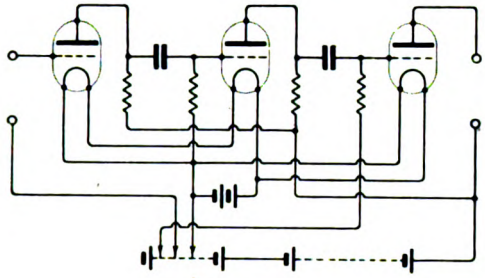

Fig. 3.

socket is listed at 17s. 6d. plus a licence fee of 7s. 9d. The high frequency double valve type 2 H.F., containing two valves and the

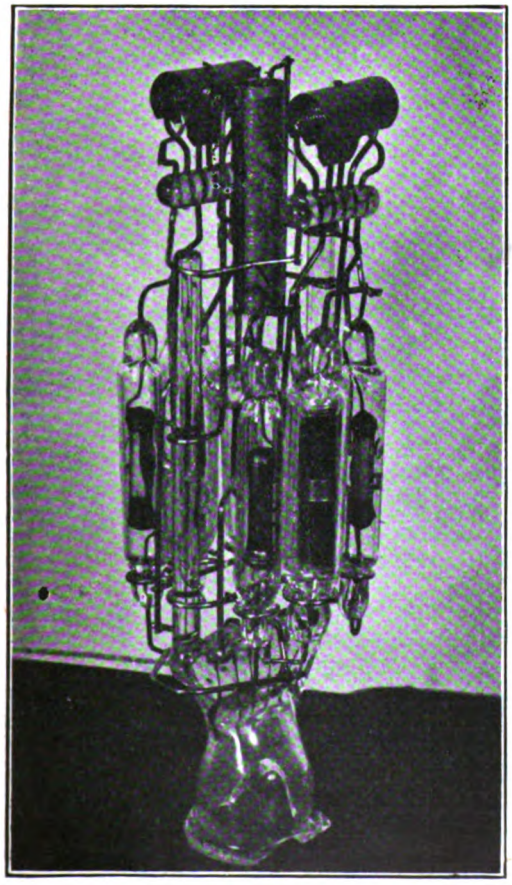

Fig. 4.

necessary anode resistance, condenser and grid resistance is listed at 15s. plus 5s. The special six-terminal bayonet sockets for these multiple valves cost 2s. 3d. each.

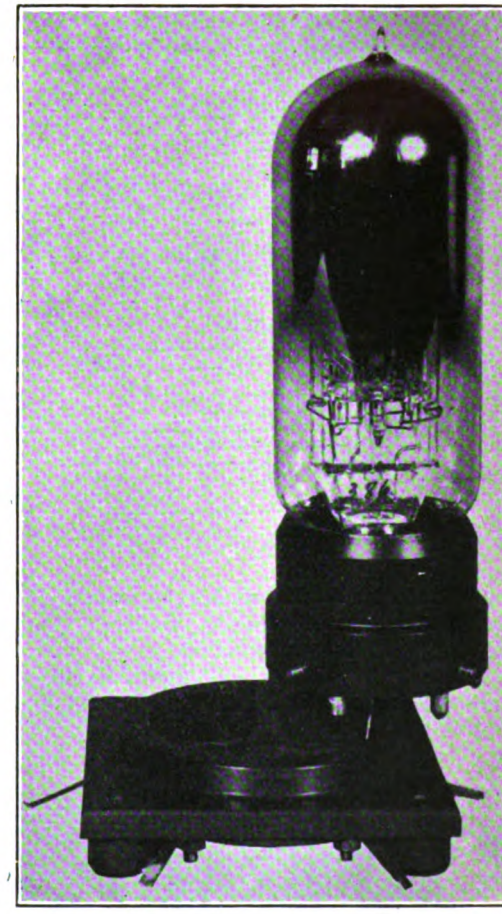

Fig. 5.

These multiple valves are a development from the work of M. von Ardenne and Heinert, who, instead of using an anode resistance of the order of 50,000 ohms in resistance-coupled amplifiers, used resistances of several megohms with valves specially designed to have a very large amplification ratio, viz. : 25 to 35.

To obtain good results with such an arrangement it is essential that the resistances should be non-inductive and of as small a capacity as possible. The Loewe Company developed a valve with suitable characteristics—their LA77—and a special

Digitized by Google

type of resistance sealed in an evacuated glass tube, and put on the market a three-valve set employing these components. The

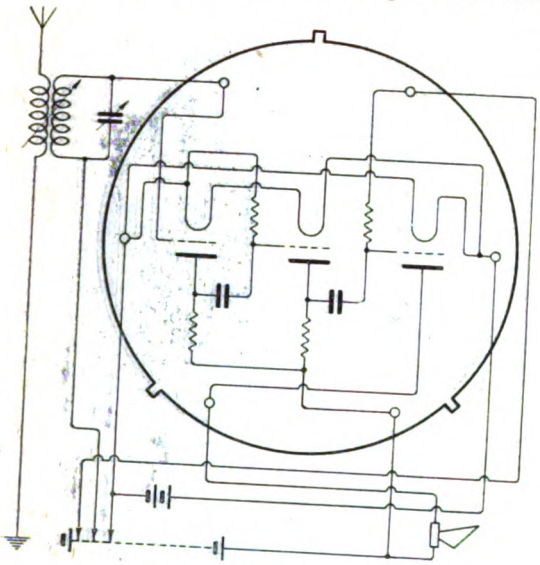

Fig. 6.

connections of this set, which was intended to give loud-speaker results from a local station, were as shown in Fig. 3.

The four resistances and two condensers were so small that they suggested the

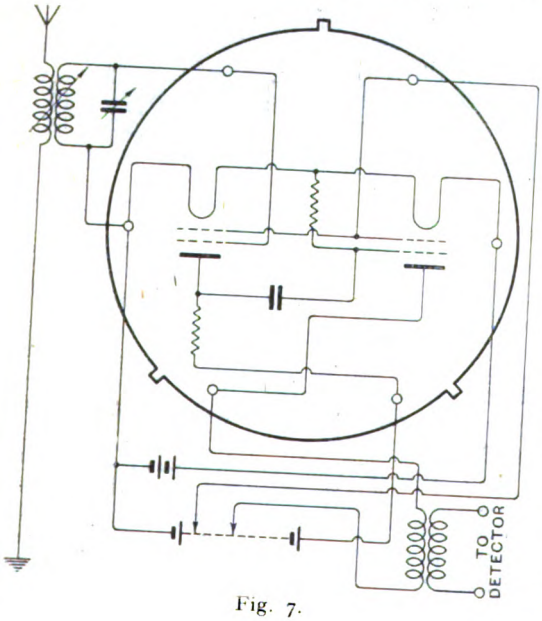

Fig. 7.

possibility of putting them all in a single bulb which might also contain the elements of the three valves. This would have the advantages of reducing stray capacities to a minimum, of screening all parts from atmospheric influences and of extreme compactness. Fig. 4 shows how the various elements are assembled in the bulb, whilst Fig. 5 shows the external appearance of the

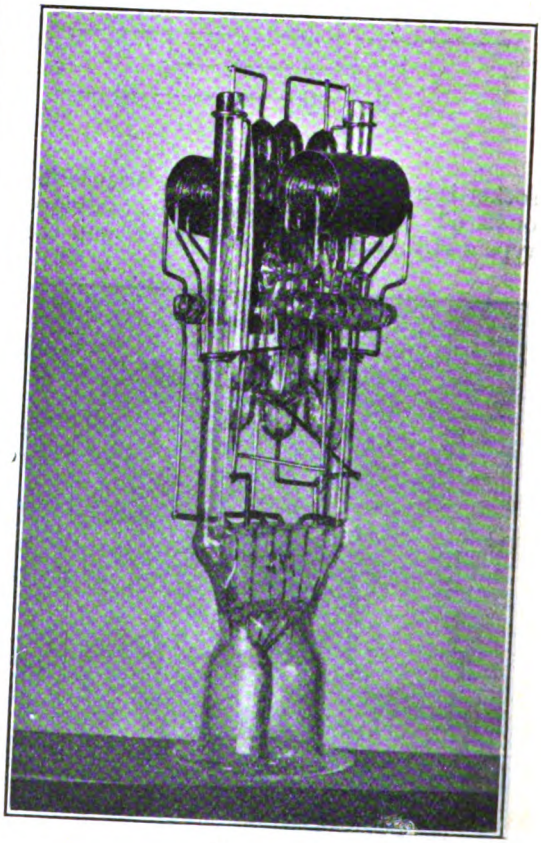

Fig. 8.

bulb and the specially-designed socket. From Fig. 6 it will be seen that the connections are the same as in Fig. 3; it will be seen moreover that the only apparatus outside the bulb is the aerial tuner, the batteries, and the loud-speaker. The filament battery should be one of 4 volts without series resistance, small voltage changes due to the battery running down having no appreciable effect; the current taken is 0.3 ampere. With an anode voltage of 90 the total current taken by the three valves

Digitized by Google

is only from 3 to 5 milliamperes, but to obtain volume enough for a large room the voltage should be increased to 150 volts.

From a local station, loud-speaker strength can be obtained with an indoor or frame aerial. With an outdoor aerial a number of distant stations can be heard on the head-phones.

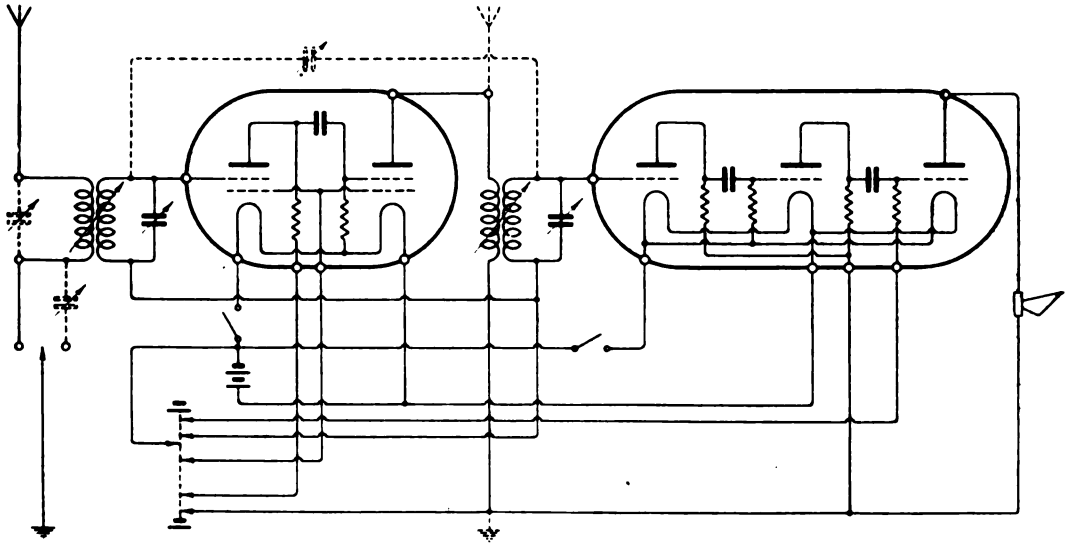

Fig. 9.

The H.F. Double Amplifier Valve.

The same principles have been applied to the design of a high frequency resistance-coupled unit consisting, however, of only two stages. The necessity of avoiding all stray capacities increases with the frequency, and the Loewe arrangement is therefore very suitable for high frequency resistance-

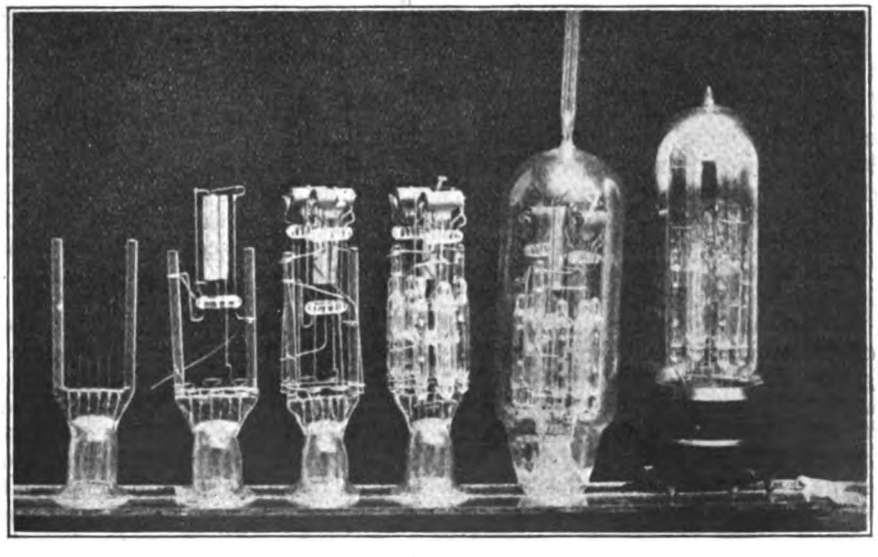

Fig. 10.

Digitized by Google

coupled amplifiers. The connections are shown in Fig. 7, and the arrangement of the various elements in the bulb in Fig. 8. The design has been carefully worked out by Dr. Loewe in collaboration with M. von Ardenne, with the result that appreciable amplification is obtained down to wavelengths of less than 200 metres. In Fig. 8, are to be seen the two valves, the anode resistance of the first valve, the grid condenser, and the grid-leak of the second valve. In outward appearance the two bulbs are similar, each has a six-pin cap fitting into similar sockets. In the H.F. amplifier double grid valves are employed, the inner grids being connected to a point on the anode battery about 15 volts positive with respect to the filament; the total space-charge current will then be about 5 milliamperes. The filaments are designed for direct connection to a four-volt battery, the current being about 0.17 ampere.

The makers emphasise the importance of screening to obtain the best results, and advise wrapping tinfoil round the bulbs and earthing it to the filament terminal. They also recommend that a 5,000 cm. condenser be connected across the output terminals on the socket of the detector amplifier unit in order to avoid H.F. oscillations being set up.

Fig. 9 shows the combination of the two units in a receiver. The Loewe Company supply receivers made up in this way at a list price of £6 15s. inclusive of licence fees but exclusive of the four plug-in coils.

To increase the amplification at short wavelengths, capacity reaction is provided by a very small condenser, shown dotted, which has a maximum capacity of 2 or 3 cm.

Such an aperiodic amplifier is not in itself selective; sufficient selectivity must be obtained by the tuning and loose coupling of the aerial and grid circuits. We presume that one will have to make the usual compromise between selectivity and quality of reproduction.

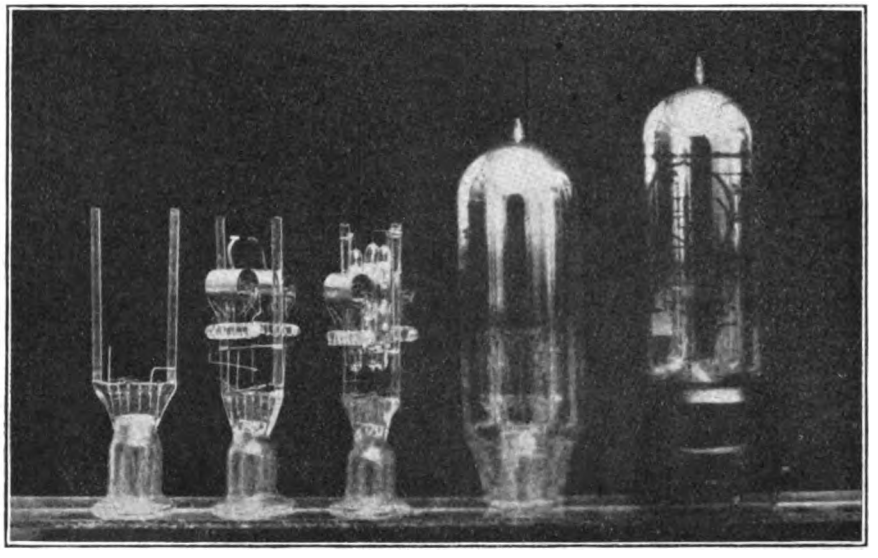

Fig. 11.

Figs. 10 and 11 show various stages in the manufacture of the detector-amplifier unit and the high frequency amplifier respectively.

Radio-Frequenz G.M.B.H.

This company, which is a Loewe-Radio subsidiary, specialise in luminous quartz resonators. As oscillation generators were not allowed within the Exhibition Hall they could not be shown in operation there, but the writer was given a striking demonstration of this important development at the Reichsanstalt, where the discovery was made by Dr. Giebe and Dr. Scheibe. It is now generally known that if a bar of quartz

Digitized by Google

cut in a certain direction with relation to the crystal axes is compressed, it becomes electrically polarised and conversely, if placed in an electric field it becomes mechanically strained. These so-called direct and

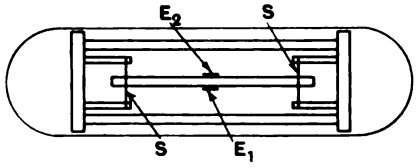

Fig. 12.

reciprocal piezo-electric effects were discovered in 1880 by J. and P. Curie. In 1922 W. J. Cady described how the natural mechanical frequency of vibration of such a quartz bar enabled it to be used as a very accurate standard of frequency of electrical oscillations. Giebe and Scheibe in 1925

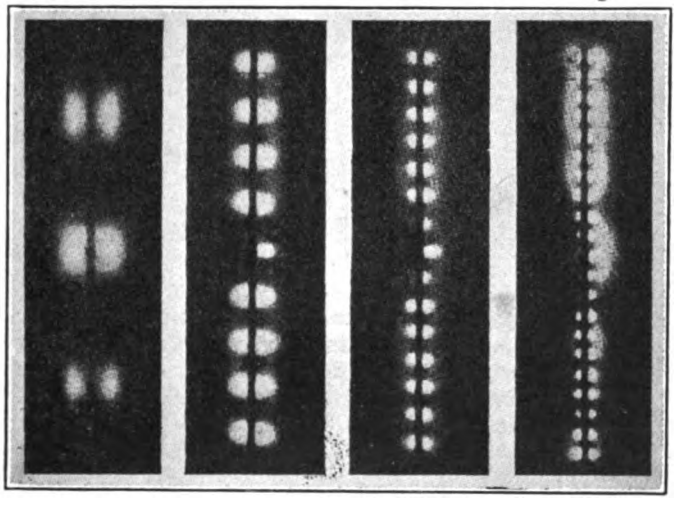

Fig. 13.

mounted the quartz bar in a vacuum tube with a mixture of helium and neon at a pressure of a few millimetres and found that the electric polarisation set up when the bar vibrated caused its surface to be covered with a luminous glow. This serves as a very sensitive indicator of resonance without the aid of any measuring instrument. Fig. 12 shows a bar of quartz suspended by silk threads *SS* at each end, the electrodes E_1 and E_2 being close to the bar at its centre but not touching it. When placed in the rarefied gas with a high frequency P.D. applied between E_1 and E_2, nothing happens unless the frequency is adjusted to agree exactly to within about 1 part in 20,000 with one of the natural frequencies of the quartz bar. Fig. 13 shows photographs of the effects produced on a bar 8 cm. long when vibrating in its 3rd, 9th, 15th and 21st harmonic. The vibrations are not transverse, but longitudinal, and the luminous effects occur at the points of maximum compression; thus the luminous patches cannot occur at the ends, and with the electrodes symmetrically at the centre only the odd harmonics can be produced. This will be clear from Fig. 14, which shows the conditions existing *in the quartz bar at* successive quarter cycles when vibrating at its 3rd harmonic. In 14(*a*) there are no differences of pressure, but the arrows show the movement of the quartz at different parts of the bar; in 14(*b*) a quarter period later the movement has ceased, but the preceding movements have left it strained with a central region of compression and two

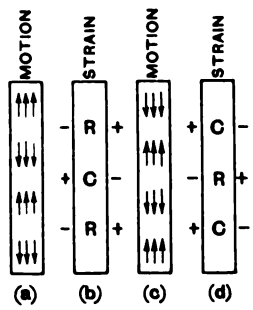

Fig. 14.

side regions of rarefaction; a quarter period later the strain is relieved and we have the velocities shown in 14(*c*), to be succeeded a quarter period later by the compressions and rarefactions shown in Fig. 14(*d*).

The longitudinal compressions and rarefactions cause transverse electrical polarisation as indicated by the + and — signs, and if these are strong enough they produce luminous effects in the neighbouring gas.

If it is only desired to work at the fundamental frequency of the quartz rod a simpler

Digitized by Google

arrangement is possible, especially for wavelengths of a few hundred metres. The frequency of the broadcast transmitter at the Berlin Exhibition Hall has been controlled for some months by a quartz rod 4–6mm. long 3mm. broad and 1.5mm. thick, lying loosely in a small metal holder with the other electrode a few millimetres above it. The fundamental frequency corresponds to a wavelength of 505 metres.

Fig. 15.

The newest type made by the Radio-Frequenz Co. are mounted in bulbs resembling small electric lamps; in these the quartz bar is held between the electrodes as shown in Fig. 15. These respond to a P.D. of 30 volts if the frequency is within one part in 10,000 of the resonant value. Fig. 16 shows a cabinet with five resonators each differing from the next by one part in a thousand, the middle one being adjusted to the standard frequency required. In this way one can watch the variation of frequency and see at once whether it is too high or too low. Above the quartz resonators is a neon lamp for rough adjustment, it is in parallel with the resonators and goes out when they respond; it also serves as a safety valve to protect the resonators. In the lower part of the cabinet is a crystal detector and galvanometer which can also be used as a resonance indicator.

The connections are as shown in Fig. 17. Prof. Giebe has made the interesting discovery that there is a low frequency periodicity in the luminous phenomenon. If a detector-amplifier unit be connected up to a loud-speaker and the input grid terminal be connected to a piece of wire brought near the quartz resonator, a note is emitted whenever the resonator glows. The pitch of the note depends on the gas pressure and on other things; it is highest at resonance, and lowers in pitch on either side of the resonant point, ceasing abruptly when the luminosity ceases. As the loud-speaker or

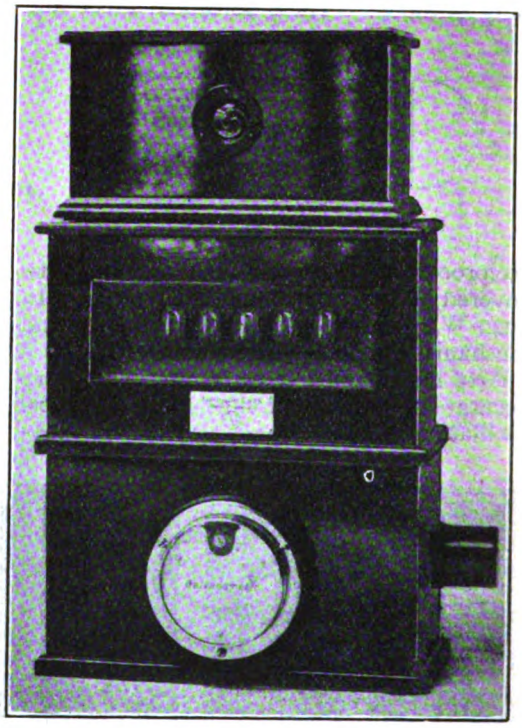

Fig. 16.

several loud-speakers can be situated at any convenient points this gives a very convenient acoustic method of distant control of the frequency. Fig. 18 shows the arrangement.

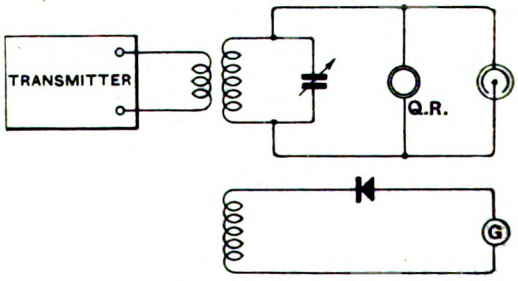

Fig. 17.

Siemens Halske's "Protos" Loud-Speaker.

This loud-speaker excited much interest because one of the same type but of a large size was mounted on the top of the

Digitized by Google

kiosk in the centre of the Hall and added to the general hubbub of the Exhibition by giving musical items. The volume was no doubt enormous and the quality remarkably good considering the conditions, but it was, we fear, generally regarded as a nuisance by those in its immediate vicinity. A similar apparatus in the grounds sounded better, probably due to the absence of

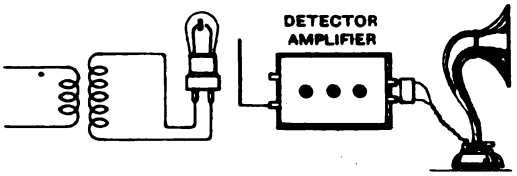

Fig. 18.

reverberation, especially in items of the military band type. The principle of this loud-speaker is simple; two sheets of Pertinax are secured at their outer edges and curved round so that their adjacent edges lie together, where they are stiffly sewn together as shown in Fig. 19. The magnet system acts horizontally on this stiff edge as shown by the arrow.

Fig. 20 shows the interior, with the ornamental perforated front plate removed.

This model is listed at £3 15s.

Apparently the same loud-speaker is made by the Telefunken Company under the name "Arcophone."

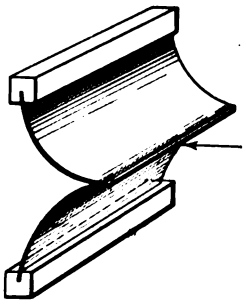

Fig. 19.

Fig. 21 shows the large model referred to above. It will be noticed that the curved sheets are placed vertically in this case. It is operated on the moving coil principle but the coil is replaced by a straight aluminium band about 20 inches long running along the stiff edge where the two curved sheets are fastened together. This is situated in the gap of a magnet and consequently moves backwards and forwards under the influences of the amplified speech currents.

C. Lorenz A.-G. of Berlin.

This firm is one of the oldest and largest in the Radio Industry; they manufacture everything connected with wireless from

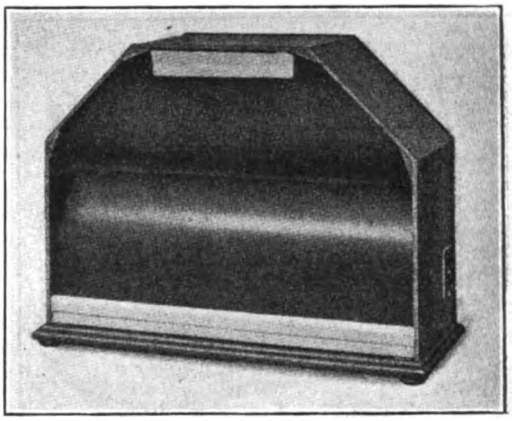

Fig. 20.

crystal detectors to high-frequency alternators. They exhibited a wide range of apparatus, including complete broadcasting

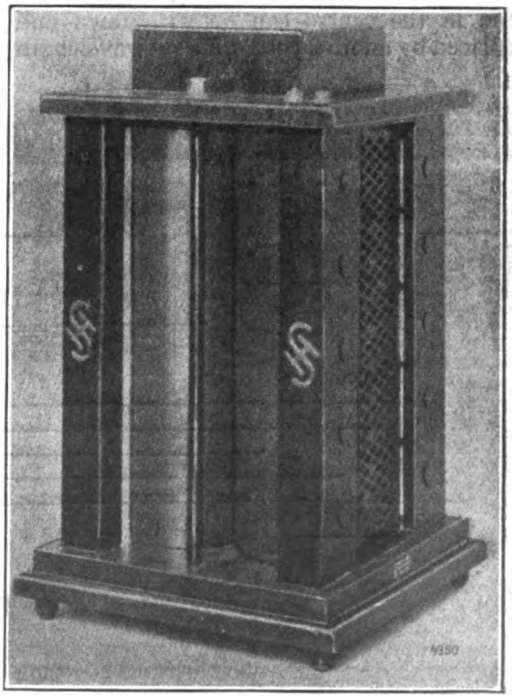

Fig. 21.

Digitized by Google

panels as supplied to many of the continental stations. Among the receiving sets was a small but well-made crystal set with variometer tuning listed at 10s. At the other end

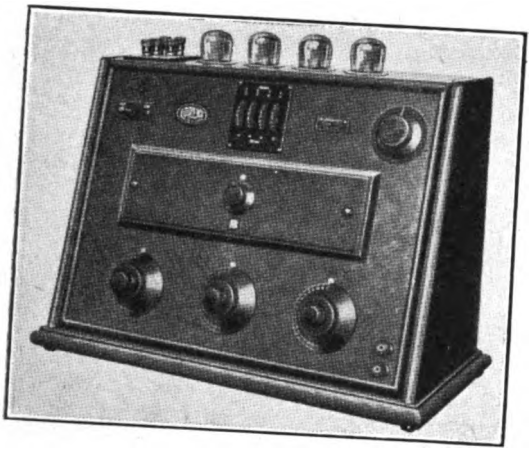

Fig. 22.

of the scale was their "Neutro" 4-valve receiver shown in Fig. 22, the connections of which are shown in Fig. 23. The drawer seen in the centre can be withdrawn and replaced by another for a different wavelength

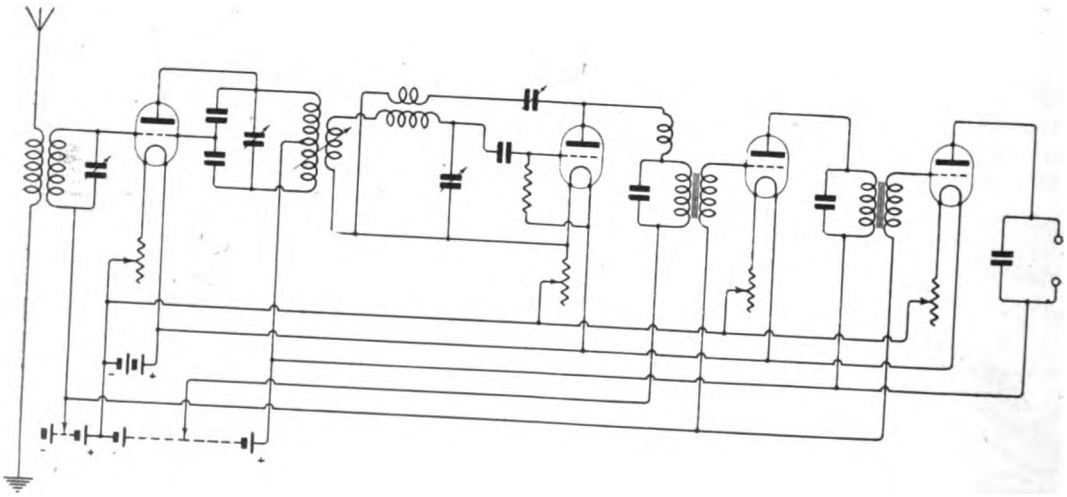

Fig. 23.

range; there are three such drawers covering 200-600, 600-1,700, and 1,700-4,000 metres respectively. The three variable condensers are seen at the bottom, the reaction adjustment at the right; the four filament rheostats are operated by the four discs mounted edgewise at the top of the case. The set is

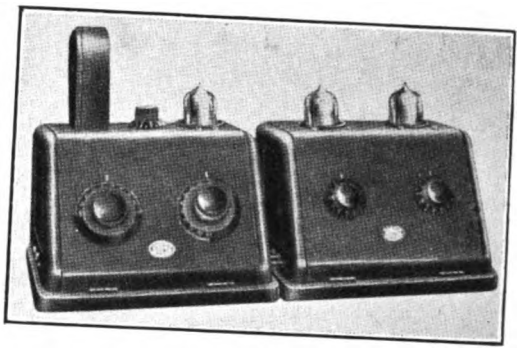

Fig. 24.

listed at £14 10s. with a single wavelength range; the additional ranges cost 35s. each.

Their "Universo" set consisted of a single-valve receiver which could be coupled up to a two-valve amplifier in a separate case. This set is shown in Fig. 24 and the connections in Fig. 25. On the left is seen the massively mounted plug-in coil by which the range can be changed, four coils covering the range from 200 to 4,500 metres. Each half of the set is listed at 57s. 6d. and the coils at 5s. 6d. each.

Digitized by Google

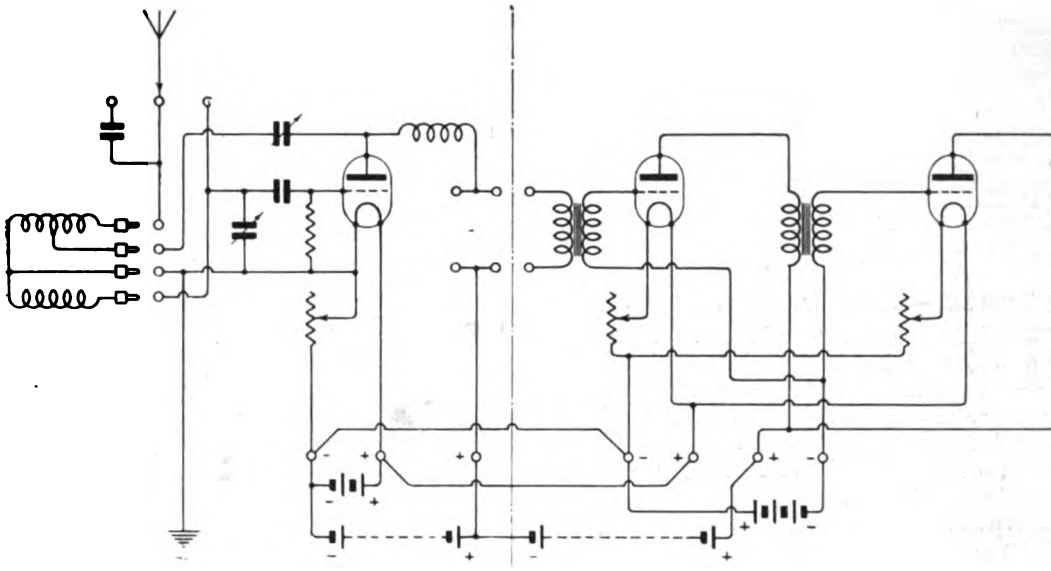

Fig. 25.

Push-Pull Valves.

Two firms exhibited valves with a single filament but with a grid and anode on either side of it. These valves were fitted with six-pin caps, and could be used in place of two separate valves in any ordinary two-valve arrangement; they could also be used with central-tapped transformers on the well known push-pull system, as shown in Fig. 26, which is reproduced from the pamphlet issued by Dr. Nickel G.m.b.H. of Charlottenburg, one of the firms making these valves under the name of "Dustron."

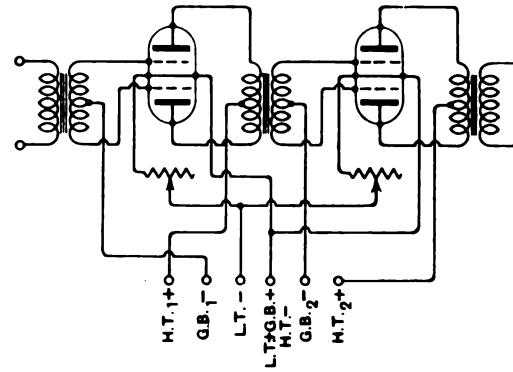

Fig. 26.

Digitized by Google

The Thermionic Voltmeter.

By W. B. Medlam, B.Sc., A.M.I.E.E., and U. A. Oschwald, B.A.

[R261

(Concluded from page 589 of October issue).

Type III.—Direct Grid Slide Back Type.

THIS type, as shown in Fig. 24, is rather more complicated than Types I. and II., but has important advantages. To measure a voltage applied across the input terminals the grid potential is adjusted by means of the potential divider A (fine control) and the cells B_1 (coarse control) until the anode current is reduced to a definite fixed value, say 1μA. The D.C. grid voltage is then a measure of the applied voltage. A separate D.C. voltmeter to measure the grid potential is not essential, as this may be measured on the anode microammeter by a simple change of connections. An arrangement for this purpose is shown in Fig. 25. With the switch in position 1 the instrument is connected in the anode circuit, and in position 2 the instrument is connected in series with the necessary resistance R across the steady grid voltage to be measured. The resistance R may be tapped, or the galvanometer may be shunted, to give a series of D.C. voltage ranges.

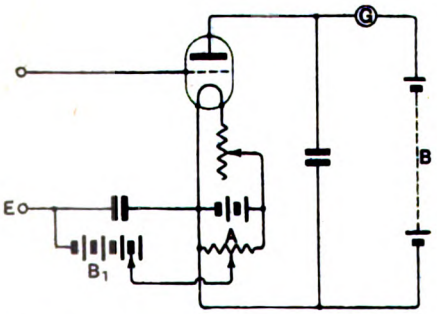

Fig. 24. *Connections on the slide back voltmeter, Type III.*

The connections in Fig. 24 are similar to those used in the earliest forms of voltmeter in which the grid voltage was slid back until the anode current was just reduced to zero. The difference between the slide back voltages with the signals on and off gives the peak value of the A.C. voltage. Owing to the indefiniteness of this zero setting and the low sensibility in the region of zero anode current the authors prefer to modify the operating conditions so that the slide back

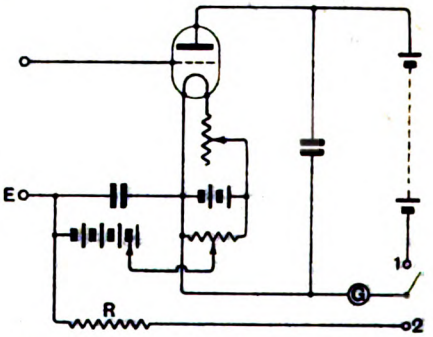

Fig. 25. *Connections for measurement of the grid bias on the anode microammeter.*

is to a false instead of to a true zero of anode current. In this case the calibration, except for very low voltages, may be made practically linear over a long range.

(*a*) *Sensibility and Range.*

With this type the range extends from about 0.1 volt to the highest voltage it is safe to apply to the grid of the valve. The whole range is covered by a single calibration and the voltmeter can be made highly sensitive throughout its range. Specimen calibration curves are given in Fig. 26 for a series of values of the constant anode current. For the nearly linear part the calibrations may be expressed in the form $E = aV - b$, in which

E = the R.M.S. value of the A.C. voltage to be measured.

V = D.C. slide back voltage required to reduce the anode current to the given value.

Digitized by Google

a and *b* are constants the values of which, derived from the curves in Fig. 26, are given in Table V. As the constant anode current is reduced the value of *a* approximates more nearly to $1/\sqrt{2}$, *i.e.*, the increment in bias voltage becomes more nearly equal to the increment in peak value of the A.C. voltage. A calibration for zero anode current is not given owing to the indefiniteness of the

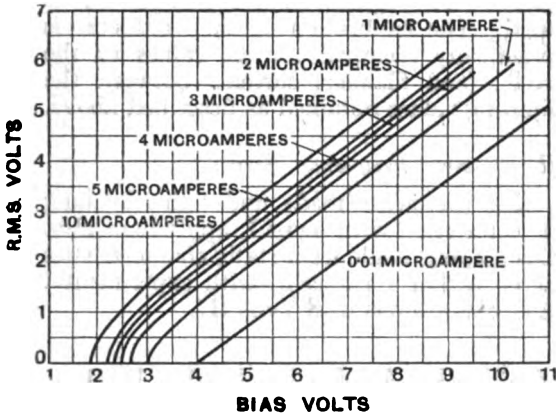

Fig. 26. *Calibration curves of the slide back voltmeter, Type III.*

zero setting. The apparent setting depends entirely on the sensitivity of the galvanometer used. This point is well shown by the curves in Fig. 27, showing the relation between bias and anode current for two slightly different A.C. voltages applied to the grid. As the bias is increased the slope becomes

TABLE V.

Constant anode current.	*a*	*b*
0.01	0.73	2.87
1.0	0.75	1.72
2.0	0.76	1.42
3.0	0.76	1.26
4.0	0.76	1.05
5.0	0.77	0.96
10.0	0.77	0.66

less and less, and zero anode current is approached asymptotically. One might estimate that the zero is reached by the lower curve at about —9.8 volts bias, but if the values in this region were measured with an instrument ten times more sensitive, some anode current would probably still be measurable with, say, —11 volts bias. If one works to a definite constant anode current, however small this may be within reason, the bias setting is perfectly definite. The difference in bias for the given difference in A.C. voltage is practiclly constant over the range covered by the two curves in Fig.

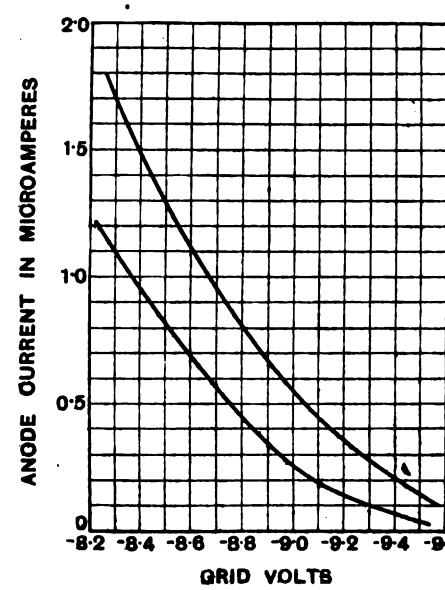

Fig. 27. *Anode current—grid bias curves, in the region of zero anode current, for two slightly different A.C. voltages.*

27, *i.e.*, the horizontal separation of the curves is nearly constant, being .27 volt at .1μA and .30 volt at 1μA, *i.e.*, a change of only .03 volt when the current is increased tenfold. However, the curves are steeper at the higher value of anode current, indicating a rather more sensitive adjustment of the bias with a given galvanometer. With a microammeter the sensitivity of the bias setting (for small A.C. voltages of the order of .2 volt) increases with the anode current; but there is little gain for currents above 5μA. On the other hand, the change in bias volts due to a given A.C. input actually increases as the anode current is decreased, as shown by the values of the constant *a* in Table V. Of course, one wants this change in bias to be as large as possible, and in this respect there is a real gain in

Digitized by Google

working to 1μA rather than to 5μA, especially on very low inputs. Further information on this point is given in Table VII., later. However, the sensitivity of the bias adjustment at 1μA is ample to make this value preferable to any greater value, when all things are taken into consideration. Before leaving the curves in Fig. 27, it may be noted that although their horizontal separation is nearly constant, their vertical separation decreases as the bias increases, indicating continued decrease in sensibility if the voltmeter is used as the deflection Type I.

TABLE VI.

(A) SINE WAVE.

R.M.S. volts.	Bias to slide back to:			A.C. peak volts.	Increment in bias to slide back to:		
	.01μA.	1.0μA.	5μA.		.01μA.	1.0μA.	5μA.
0	4.80	4.40	3.42	0	—	—	—
0.5	5.51	5.00	3.65	0.71	0.71	0.60	0.23
1.0	6.21	5.60	4.20	1.41	1.41	1.20	0.78
1.5	6.92	6.20	4.75	2.12	2.12	1.80	1.33
2.0	7.63	6.85	5.40	2.83	2.83	2.45	1.98
2.5	8.34	7.45	6.05	3.54	3.54	3.05	2.63
3.0	9.04	8.05	6.72	4.24	4.24	3.65	3.30
3.5	9.75	8.60	7.40	4.95	4.95	4.20	3.98
4.0	10.46	9.20	8.10	5.65	5.66	4.80	4.68

The effect of H.T. on the sensibility of the Type III. voltmeter is quite different from its effect on the deflection types. If the H.T. is increased more negative bias must be used in order to pull down the anode current to its given value if the filament current is kept constant, or alternatively, if the bias is kept constant the filament current must be reduced. In either case the sensibility is very little affected by large changes in H.T., and any value, say between 4 volts (from L.T.—) and 20 volts is suitable from this point of view. If the H.T. is very low one cannot use as much negative bias as is desirable unless a large filament current is used. Alternatively, with large values of H.T. and a safe value of the bias the filament current has to be so low that the sensibility falls owing to early saturation produced by the low filament emission. The best value of H.T. to use in any particular case may be determined as follows: With no A.C. input, set the bias to about −3 volts and raise the filament current to its normal working value, then adjust the H.T. until the required anode current of, say, 1μA, is obtained. This gives the lowest value of H.T. which should be used. Then lower the filament a little and increase the H.T. until the required anode current is again obtained Finally vary the bias in order to see that there are no signs of saturation at zero (or any negative) grid potential. When the filament current has to be reduced to such a value that saturation occurs near zero grid potential, the corresponding H.T. is the highest value which should be used. The calibration of the voltmeter is practically identical for all values of the H.T., (and filament current) between the limiting values obtained as described above.

(*b*) *Possible Frequency Error.*

The comments made under this heading in connection with Type I. apply here also. Calculations made from static characteristics agree within 1 per cent. with experimental A.C. calibrations with Type III.

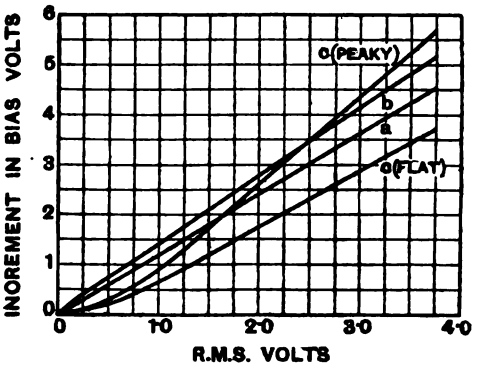

Fig. 28. *Calibration curves of the Type III. voltmeter on wave forms (a), (b), (c).*

(*c*) *Wave Form Error.*

From the principle of operation of this type of voltmeter one would expect its readings to follow the peak value of the input voltage unless the constant anode current is large. This view was confirmed on test with the same wave forms (Figs. 7, 8, and 9) on which the other voltmeters were tested. The results are given in Tables VI., VII. and VIII. for (*a*) the sine wave, (*b*) the third harmonic wave, and (*c*) the second harmonic wave, respectively. The increment in bias is plotted against R.M.S. volts in Fig. 28, for a slide to 1μA, in all cases. The errors

Digitized by Google

referred to the corresponding sine calibrations as before, are given in Table IX. They will be seen to be greater than for Type I. and less than for Type II. The errors decrease as the anode current is increased.

TABLE VII.

(B) THIRD HARMONIC WAVE.

R.M.S. volts.	Bias to slide back to :			A.C. peak volts.	Increment in bias to slide back to :		
	.01μA.	1.0 μA.	5μA.		.01μA.	1.0 μA.	5μA.
0	4.80	4.40	3.42	0	—	—	—
0.5	5.64	5.15	3.68	0.915	0.84	0.75	0.26
1.0	6.47	5.85	4.25	1.83	1.67	1.45	0.83
1.5	7.31	6.50	4.83	2.74	2.51	2.10	1.41
2.0	8.14	7.20	5.50	3.66	3.34	2.80	2.08
2.5	8.98	7.90	6.20	4.57	4.18	3.50	2.78
3.0	9.82	8.55	6.90	5.49	5.02	4.15	3.48
3.5	10.65	9.15	7.60	6.40	5.85	4.75	4.18
4.0	11.49	9.80	8.33	7.32	6.69	5.40	4.91

(*d*) *Input Load.*

The power factor of this type is about the same as for the deflection Type I. (operated with proper grid bias in relation to the input voltage). With very large input voltages (exceeding say 20 volts) the load may become a little greater unless the initial bias is at least 3 volts with no input. The reason for this is that the increase in bias is not quite as great as the increase in A.C. volts.

TABLE VIII.

(C) SECOND HARMONIC WAVE.

R.M.S. volts.	Bias to slide back to 1μA.		A.C. peak volts.		Increment in bias to slide back to 1μA.	
	Peaky half. +	Flat half. +	Peaky half. +	Flat half. +	Peaky half. +	Flat half. +
0	4.60	4.60	0	0	—	—
0.5	4.91	4.80	0.88	0.52	0.31	0.20
1.0	5.53	5.25	1.77	1.05	0.92	0.65
1.5	6.34	5.80	2.65	1.57	1.74	1.20
2.0	7.20	6.36	3.54	2.10	2.60	1.76
2.5	8.08	6.92	4.42	2.62	3.48	2.32
3.0	8.94	7.48	5.31	3.15	4.34	2.88
3.5	9.80	8.04	6.19	3.67	5.20	3.44
4.0	10.65	8.60	7.08	4.20	6.05	4.00

(*e*) *Stability of Calibration.*

A great advantage of this type of voltmeter is the permanence of its calibration. When operated very close to zero anode current, say .01μA, the increment in bias becomes nearly equal to the peak value of the A.C. voltage, and is almost entirely unaffected by change in the values of the H.T. steady bias and filament current. In addition, this calibration is the same for any valve. As the constant anode current is increased the calibration becomes dependent, to an increasing extent, on the values of the

TABLE IX.

R.M.S. volts.	Per cent. error with slide back to :				
	1μA.			.01μA.	5μA.
		c			
	b	Peaky half +	Flat half +	b	b
0.5	+20	—48	—68	+20	+5
1.0	+23	—22	—47	+18	+7
1.5	+16	—3	—34	+18	+3
2.0	+15	+7	—26	+18	+3
2.5	+16	+16	—23	+18	+5
3.0	+15	+21	—21	+18	+5
3.5	+14	+25	—19	+18	+4
4.0	+14	+28	—16	+18	+5

H.T. bias and filament current and also on the valve used.

The results of a test with a 235-type valve to show the effect of changes in the H.T. filament current and steady bias are given in Table X. for a constant anode current of 1μA. In test *A* the bias was kept constant at — 2 volts and the filament current and H.T. were varied together to give 1μA

TABLE X.

CONSTANT ANODE CURRENT 1μA.

Anode volts.	Filament current.	Negative bias with		Increment in bias.	Conditions of test.
		No volts.	2.2 volts R.M.S.		
18	.236	2.00	3.67	1.67	
16	.242	2.00	3.97	1.97	
14	.26	2.00	4.13	2.13	
12	.282	2.00	4.21	2.21	
10	.302	2.00	4.24	2.24	A
8	.330	2.00	4.21	2.21	
6	.370	2.00	4.19	2.19	
4	.438	2.00	4.17	2.17	
12	.245	0.93	2.70	1.77	
12	.260	1.41	3.61	2.20	
12	.290	2.18	4.39	2.21	B
12	.318	2.69	4.89	2.20	
12	.378	3.44	5.62	2.18	
2	.35	0.78	3.20	2.42	
6	.35	1.77	4.00	2.23	
12	.35	3.15	5.34	2.19	C
18	.35	4.50	6.60	2.10	

with no input. The bias values with 2.2 volts R.M.S. are shown in column 4, and the change in bias due to this input in column 5. The calibration is seen to vary, but it must be taken into consideration that the

Digitized by Google

filament current range between the first and last values (.236 and .438A respectively) is enormous. With .236A the saturation current did not greatly exceed 1μA, and with .438A it was greater than 40 milliamps. In the region of normal filament current a change of 1 per cent. in the calibration does not occur until the H.T. changes about 30 per cent. In test B the H.T. was kept constant, and the filament current and bias were varied together to give 1μA, with no input. The change in calibration does not much exceed 1 per cent. over a range of filament current from .26 to .378, and of initial bias from 1.41 to 3.44 volts.

In test C the filament current was kept constant and the H.T. and initial bias were varied together over a very wide range. If an H.T. of nominal value 12 volts drops to half this voltage the calibration only changes 1.8 per cent. under these conditions.

Type IV.—Deflection Type, Curvature Rectifier with Grid-Leak and Condenser.

This type operates in the same manner as the Type I. voltmeter but it does not require a closed input circuit and is not affected by D.C. voltages across its input terminals. The connections are shown in Fig. 29. These are the same as for Type II. except that negative bias is applied to the grid-leak so as to enable the valve to operate on the

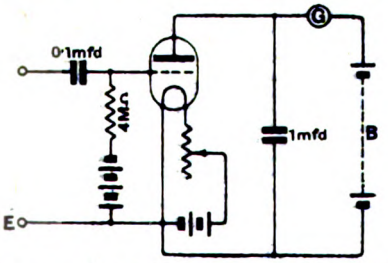

Fig. 29. *Connections of the deflecting voltmeter, Type IV., rectifying on curvature of the anode characteristic but using a grid condenser and leak.*

lower bend of its characteristic and to prevent the flow of grid current. The voltmeter will operate without the extra anode voltage *B* if the galvanometer lead is taken to L.T. +, but this extra voltage is an advantage as in the case of Type I., and for the same reasons.

(*a*) *Sensibility and Range.*

The general comments made under this heading for the Type I. voltmeter apply equally here. If the voltmeter is operated so that no grid current flows during any part of the cycle of the input voltage, *i.e.*, the grid bias exceeds the peak value of the A.C. voltage by a volt or so, then the calibration is

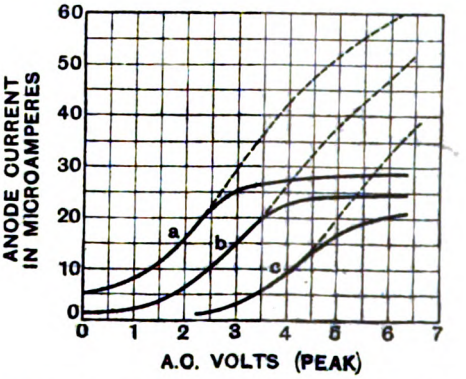

Fig. 30. *Calibration curves of the Type IV. voltmeter.*

identical with that of Type I. operated under any given conditions. Thus the numerical results previously given for Type I. also apply to Type IV. in this case. But if the grid bias is insufficient to prevent grid current the calibrations of the two types are not the same. This is shown by the calibration curves in Fig. 30. The full line curves are the calibrations for Type IV., the dotted lines are those for Type I. These results were obtained with the following steady biases: (*a*) — 2.27 volts, (*b*) — 3.17 volts, and (*c*) — 4.27 volts. Vertical lines cutting the three calibration curves *a*, *b*, and *c* at these voltages respectively, will be seen to mark the point on each curve at which the calibrations for the two types become different. Beyond this point the divergence increases rapidly with increased input and correspondingly increased grid current. The reason for this divergence is that grid current through the leak sets up a P.D. across it in such a direction as to make the grid more negative. Thus with grid current the negative potential on the grid is greater than the steady bias, giving a reduction in anode current which does not occur in the case of Type I. unless the voltmeter is used on a very high resistance input circuit.

Digitized by Google

However, this divergence is really outside the normal working range of the voltmeters over which the calibrations are identical.

By arranging the input connections as shown in Fig. 31, using a single pole switch, a rapid change over from one type to the other may be effected. With the switch in position 2 the voltmeter operates as Type

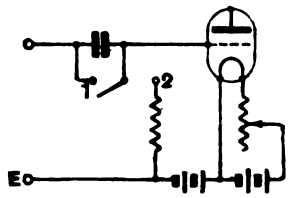

Fig. 31. *A method of effecting a change over from the Type IV. voltmeter to Type I.*

IV. on open input circuits or where there is a D.C. through the input circuit; with the switch in position 1 the voltmeter operates as Type I. in cases where it may be desired to cut out the load due to the leak.* The calibration and operating conditions are all unaffected by the change over, unless there is grid current. The bias must be connected as shown in Fig. 31, and not in series with the leak, as in Fig. 29.

(*b*) *Frequency Error.*

See remarks under this heading for Type II.

(*c*) *Wave Form Error.*

The wave form error is the same as for Type I. over the range where no grid current flows. When there is grid current the reading will be less with a peaky wave than with a sine wave, and the errors will be less positive than shown in Table I. We do not present experimental results for this case, as it is outside the proper working range of the voltmeter.

(*d*) *Input Load.*

The power factor of Type IV. will be higher than that of Type I. by an amount depending on the A.C. qualities of the grid-leak. From the results given in Tables II. and IV. one may expect that the losses will be about doubled by the presence of the leak, unless this happens to have unusual losses. In this connection it may be noted that with the switching arrangement shown in Fig. 31, the total capacity between the switch contact 2 (with its wiring to and the capacity of the leak terminal) and the centre contact (with its wiring to the grid) must be reduced to a fraction of $1\mu\mu F$ if the leak losses are to be much reduced when the switch is in position 1. For instance, with leak *F* (Table IV.), a wiring capacity as low as $0.4\mu\mu F$, will only reduce the leak losses to half what they would be with the leak in direct connection to the grid. It may also be noted that, although the material used between the plates of the grid condenser must have a high insulation resistance in order, as has been previously pointed out, to prevent direct leakage of D.C. potentials to the grid, this material may be a very inferior dielectric without affecting the A.C. losses of the voltmeter, as there is practically no voltage drop on this condenser.

Although the losses with Type IV. will be greater than with Type I., they will be less than with Type II., using the same leak in both cases.

(*e*) *Stability of Calibration.*

If the operating conditions are such that there is no grid current the results previously given for Type I. apply here in detail. A change of leak resistance has no effect on the calibration. But when there is grid current there will be a change in calibration if the leak resistance alters.

Type V.—Grid Slide Back Type with Grid-leak and Condenser.

This type of voltmeter is the similar modification of Type III. that Type IV. is of Type I. It is operated in exactly the same way as Type III. The connections are shown in Fig. 32. The variable bias required to reduce the anode current to its constant value is applied to the grid through a high resistance leak, instead of directly as in Type III.

The performance of this type under headings (*a*), (*c*) and (*e*) is identical, qualitatively and quantitatively to that of Type III., the calibration being independent of the leak resistance.

The power factor will be increased due

* See also the comments under heading "Input Load," Type IV.

Digitized by Google

to the A.C. losses in the leak, even if the D.C. resistance is made high enough to prevent any appreciable load on this account. The magnitude of the increase may be estimated from what has been stated above in connection with other types of voltmeter.

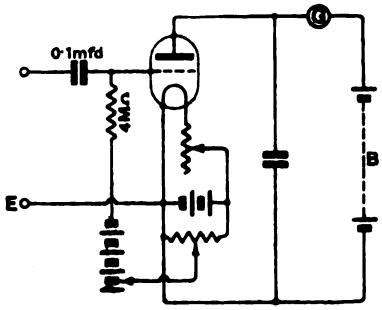

Fig. 32. *Connections of the slide back voltmeter, Type V., using a grid condenser and leak.*

The frequency error will be determined by the conditions given in connection with Type II.

Type VI.—The Reflex Voltmeter.

The great disadvantage of the direct deflection voltmeter, Type I., for general purposes, is the shortness of its range. If one maintains the grid bias at 1 volt more than the peak value of the maximum A.C. voltage, then the difference between the highest and lowest voltages readable (on the scale of a microammeter) will not exceed 3 volts under the most favourable conditions. Usually the range covered is nearer 2 than 3 volts. Thus many different calibrations are necessary to cover a wide range without a break. We have recently been experimenting with a modification of this type in which the above disadvantage is overcome. This new voltmeter we have termed the reflex type. The connections are shown in Fig. 33, from which it will be seen that a high resistance R is connected in such a way that the voltage drop on it, due to the anode current flowing through it, acts as an additional negative bias. If the A.C. voltage on the grid is increased, the anode current increases, and the negative bias is also automatically increased in proportion. Thus much greater voltages may be applied to the grid before grid current occurs than is the case with the Type I. voltmeter with the same steady bias. In addition the sensibility with low inputs is unaffected, as under these conditions the anode current, and drop on the resistance is very small. It is possible with this type to calibrate the scale of a microammeter

TABLE XI.

H.T. = 60 volts. R = 160,000 ohms.
Steady bias — 12 volts.

R.M.S. volts.	Anode current.
0	8.
1	9.5
2	12.0
3	15.3
4	20.
5	25
6	30
8	40
10	50
12	60
14	70
16	80
18	90
20	100

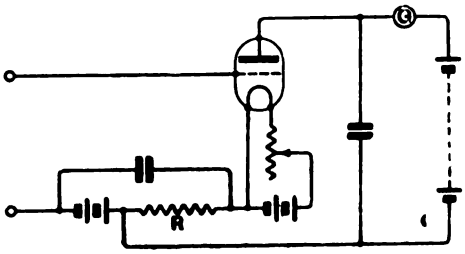

Fig. 33. *Connections of the reflex voltmeter, Type VI.*

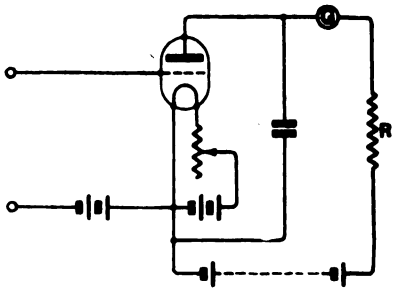

Fig. 34. *The usual method of improving the degree of linearity of the scale of the Type I. voltmeter.*

Digitized by Google

from, say, 1 to 10 volts, or from 2 to 20 volts. In the second case the scale may be made perfectly linear from 4 to 20 volts, as shown by the specimen calibration in Table XI.

It is well known that the scale of the deflection voltmeter (Type I.) may be made more linear by insertion of a high resistance in the anode circuit as shown in Fig. 34,* but this resistance does not increase the useful range of the voltmeter as it does not affect the grid circuit conditions, on which the maximum safe input voltage depends. The voltage drop on the resistance in this case has the sole effect of reducing the anode potential so that the anode current rises more slowly as the A.C. grid voltage is increased. In the reflex voltmeter this resistance has the additional

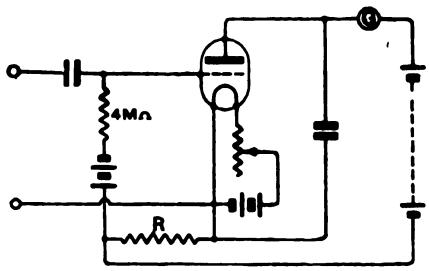

Fig. 35. *Connections of a reflex voltmeter, using grid condenser and leak.*

effect, as mentioned above, of increasing the negative bias when the A.C. grid volts increase. This second effect also slows down the increase in anode current. Thus a given degree of linearity of the scale is obtained with a lower resistance with the reflex connection.

We are at present attempting to make a linear microammeter scale serve for several voltage ranges having exact multiplying factors of, say, 2, 5 and 10, by simply changing the resistance and bias according to the range required. As our experiments in this direction are not yet completed we are leaving quantitative information on this voltmeter for a later paper.

It will be evident that the reflex action may be applied usefully to the Type IV. voltmeter, as shown in Fig. 35.

* *Loc. cit.*

Conclusion.

Each of the voltmeters described above is more suitable than any of the others for some particular purpose, and it may be useful to indicate briefly the scoring points of each type. The deflection voltmeter, Type I., is the simplest of all. This type and its modified form, Type IV., are the most suitable for use in cases where small changes in comparatively large voltages have to be read as accurately as possible, as in certain resistance measurements. By suitably biasing the grid the voltage scale may be expanded in the region where it is desired to work, and these voltmeters will be the most sensitive of any to voltage changes over this restricted range. These types also show less wave form error than any other type. The broken D.C. input circuit of Type IV. makes this type more generally useful than Type I., and it would completely replace this type of the effect of the A.C. losses in the leak could be made negligible.

Regarding the leaky-grid voltmeter, Type II., we can only show it to advantage in cases where voltages below 0.1 volt have to be measured directly: no other type can be used at or below this voltage. But in order to make use of this extra sensitivity it is necessary to balance out the large steady current. For all other purposes this voltmeter is inferior to some other type. Its broken D.C. input circuit can be met with Types IV. or V.; its losses and wave form errors are much greater than for any other type, and its calibration is the least stable.

The slide back voltmeters, Types III. and V., are useful where voltages of widely differing values have to be measured. A single calibration covers a range from 0.1 to 100 volts, and the calibration is much more stable than in any other type (in the sense that a given change in operating conditions affects its calibration least). Of the two slide back voltmeters, Type III. is preferable where the losses have to be kept down to the absolute minimum. However, these types have the very serious disadvantage of taking a comparatively long time to make a measurement, as the bias has first to be adjusted before the actual reading is taken. This disadvantage rules these types out as general purpose voltmeters.

As the general purpose voltmeter we have

Digitized by Google

no hesitation in advising the reflex Type VI., with grid condenser and leak (Fig. 35). About 70 per cent. of its voltage scale can be made as linear as in a D.C. moving coil instrument, and the microamps per volt over this part of the scale may be adjusted to any desired value. Thus two such ranges, say from 25 to 5 volts, 10 to 2 volts, together with a low range from .1 to 2.5 volts, would suffice for most purposes.

APPENDIX.

The A.C. calibration of any of the voltmeters described above is calculable from static characteristics. The calculated and observed values invariably agree within the limits of error of the instruments used for the A.C. measurements. The more exact calculations are rather tedious, and only one example—applied to the Type I. voltmeter—will be given in detail, in order to illustrate the method.

First the instantaneous values of the A.C. voltage are tabulated at, say, 10° intervals from 90° to 270°, and the corresponding instantaneous values of the grid potentials are obtained by subtracting the steady negative bias from each reading. Then the anode current for each of these grid voltages is obtained from the static characteristic, which is assumed to be given. These currents are then integrated and the mean value is calculated. The result is one point on the calibration.

TABLE IA.

Grid volts.	Anode current	Grid volts.	Anode current.	Grid volts.	Anode current.	Grid volts.	Anode current.
+1.8	417.6	—0.1	175.0	—2.0	34.1	—3.9	2.18
+1.7	403.8	—0.2	164.0	—2.1	31.0	—4.0	1.7
+1.6	390.0	—0.3	152.6	—2.2	28.15	—4.1	1.3
+1.5	376.3	—0.4	142.0	—2.3	25.25	—4.2	1.0
+1.4	362.5	—0.5	132.5	—2.4	22.5	—4.3	0.7
+1.3	348.8	—0.6	122.	—2.5	20.0	—4.4	0.55
+1.2	335.0	—0.7	114.0	—2.6	17.5	—4.5	0.4
+1.1	322.5	—0.8	105.0	—2.7	15.5	—4.6	0.3
+1.0	310.0	—0.9	97.0	—2.8	13.5	—4.7	0.2
+0.9	295.0	—1.0	89.0	—2.9	11.75	—4.8	0.1
+0.8	283.0	—1.1	82.5	—3.0	10.0	—4.9	0.0
+0.7	270.0	—1.2	76.0	—3.1	8.8		
+0.6	257.5	—1.3	69.5	—3.2	7.6		
+0.5	245.0	—1.4	63.0	—3.3	6.5		
+0.4	232.5	—1.5	57.3	—3.4	5.6		
+0.3	220.0	—1.6	51.6	—3.5	4.75		
+0.2	210.0	—1.7	46.6	—3.6	4.0		
+0.1	200.0	—1.8	41.6	—3.7	3.33		
0.0	186.0	—1.9	37.8	—3.8	2.65		

For the numerical example the static characteristic is given in Table IA. To simplify the calculations a sine wave of applied E.M.F. was assumed with a peak value of 2 volts. The steady bias was taken as —3 volts. The instantaneous values e of the alternating input, for each 10° from 90° to 270°, are shown in the second column of Table IIA. The instantaneous grid potential, e_g, is given in this case by the expression $e_g = e - 3$. The anode currents (from Table IA) corresponding to these grid potentials are given in the last column of Table IIA.

A little consideration will show that the anode current wave from 0° to 90° is the same as from 90° to 180°; and also the part from 180° to 270° is identical to that from 270° to 360°. Thus it is only necessary to tabulate values for the half cycle from 90° to 270°, as is done in Table IIA. The average anode current I_a read by a microammeter in the anode circuit is given by the expression

$$I_a = \frac{I - \frac{1}{2}(I_{90} + I_{270})}{n - 1}$$

in which

I represents the sum of all the instantaneous anode currents.

I_{90} represents the anode current for the first reading at 90°.

I_{270} represents the anode current for the last reading at 270°.

n represents the total number of readings (including the first and last reading).

TABLE IIA.

Angle (degrees).	e	$e_g = e - 3$	Anode current.
90	2.000	—1.00	89.0
100	1.97	—1.03	87.05
110	1.88	—1.12	81.2
120	1.732	—1.27	71.45
130	1.532	—1.47	59.0
140	1.286	—1.71	46.1
150	1.00	—2.00	34.1
160	0.684	—2.32	24.7
170	0.347	—2.65	16.5
180	0	—3.00	10.0
190	—0.347	—3.35	6.05
200	—0.684	—3.68	3.46
210	—1.00	—4.00	1.7
220	—1.286	—4.29	0.73
230	—1.532	—4.53	0.37
240	—1.732	—4.73	0.17
250	—1.88	—4.88	0.02
260	—1.97	—4.97	0
270	—2.00	—5.00	0

TABLE IIIA.

Peak volts.	Anode current.		
	A.C. test.	Calculated at 10° intervals	Very approximate calculation.
0	10.0	10.0	10.0
0.425	11.0	—	10.9
0.85	13.0	—	13.0
1.0	14.0	14.2	13.9
1.4	18.0	—	18.0
2.0	27.0	27.06	27.2
2.77	44.0	—	45.1
3.0	50.8	50.7	51.5

Digitized by Google

In this case I, the sum of all the currents in the last column of Table IIA, is 531.6. The value of $\frac{1}{2}(I_{90}+I_{270})=\frac{1}{2}(89+0)=44.5$, and $n=19$.

Thus

$$I_a = \frac{531.6-44.5}{19-1} = 27.06\mu\text{A}.$$

In a similar manner the mean anode current was calculated for A.C. peak inputs of 1 and 3 volts. The results, together with the corresponding values from an A.C. test with a sine wave of applied voltage, are given in Table IIIA. In this test the supply was at 40 cycles; the H.T. 18 volts, and the steady bias —3 volts. An approximate calculation giving results within 2 or 3 per cent. at every point may be rapidly obtained in a very simple manner, as follows :—

From the static characteristic find the anode current corresponding to the following grid potentials :—

(*a*) The steady bias.

(*b*) The steady bias + peak value of the A.C. voltage.

(*c*) The steady bias — peak value of the A.C. voltage.

The mean anode current is then given approximately by

$$\frac{(a)}{2}+\frac{(b)+(c)}{4}$$

For example, consider an A.C. of 1.4 volts peak, with bias —3 volts. Then from Table IA we have

(*a*) for —3 volts the anode current is 10.

(*b*) for $-3+1.4=-1.6$ volts the anode current is 51.6.

(*c*) for $-3-1.4=-4.4$ volts the anode current is 0.55.

The mean current is

$$\frac{10.0}{2}+\frac{51.6+0.55}{4} = 18.04\mu\text{A}$$

against an A.C. test value of 18.0μA.

Other values calculated by this approximate method are given in the last column of Table IIIA.

With reference to the article by Messrs. Medlam & Oschwald, we are asked by the Cambridge Instrument Co., Ltd., to state that they are the makers of the Moullin Thermionic Voltmeter.

We are also asked to state that they are the makers of the Duddell Oscillograph employed by Mr. Baggally in the experiments described in our October issue.

Digitized by Google

Mathematics for Wireless Amateurs.

By F. M. Colebrook, B.Sc., A.C.G.I., D.I.C. **[510**

(*Continued from page 618 of October issue*).

6. (A) The Solution of Equations.

THE solution of equations is a sort of mathematical detective work. One is given a sufficiency of clues and instructed to find the body, as it were. More prosaically, equations are statements embodying information about certain unthe known numbers (usually represented by symbols x, y, or z) and various other known numbers (a, b, c, etc.), and from this information it is required to find what numbers are represented by the x, y, or z symbols. This is more generally expressed as finding the "values" of the unknown numbers. The use of the word "value" in this connection is sanctioned by general practice, but one has only to speak of x being "more valuable" than y to realise that this special application of the term "value" does violence to the ordinary meaning of the word, which is rather a pity. It is, however, a convenient word to use for the full algebraic significance of a symbol, *i.e.*, magnitude and sign.

The simplest equations are those in which only one unknown number, x, has to be determined, and these will first be considered.

(A1) Equations for One Unknown Number.

This subject is best approached as one might approach some new and unexplored city. Having first seen it as a whole from overlooking high ground, one enters and gets to know its main thoroughfares and as many of its byways as one has occasion to use.

The meaning of the word "function" and of the notation

$$y = f(x)$$

was explained in the preceding section. It was shown that $f(x)$ is a number the magnitude and sign of which depends in some specified manner on the value assigned to x. For instance the form of the function might be specified as

$$y = f(x) = 3x^2 + 5x + 7$$

The value of y for some particular value of x, 8 for instance, is written $f(8)$, so that for this value of x

$$y = f(8) = 3 \times 8^2 + 5 \times 8 + 7 = 239$$

In general, if $f(x)$ is specified as

$$y = f(x) = ax^2 + bx + c$$

the value of y corresponding to some particular numerical value of x, α for instance, would be

$$y = f(\alpha) = a\alpha^2 + b\alpha + c$$

It was further shown that in general the relation between y and x where

$$y = f(x)$$

could be exhibited graphically in the form of a picture drawn in accordance with certain agreed rules. The relation is shown in the form of a line which may be a straight line (see Fig. 8, October issue) but which will in general be a curved line which may assume an infinite variety of shapes according to the type of the function. (See for instance Fig. 9, October issue.)

In most cases the curve representing the function will cut the axis of x (*i.e.*, the line OX in Fig. 8). If it is a straight line it will cut it in one point only, but if it is a curved line it may cut it in several places or perhaps not at all. Thus for some assumed function $y = F(x)$, the curve of which is as shown in Fig. 10, the axis of x is crossed at three points, the x co-ordinates of these points being, say, α, β, and γ. For all points on the x axis, the y co-ordinate is zero, *i.e.*, $y = 0$. For all points at which the curve $y = f(x)$ cuts the x axis, the value of x is such that

$$y = f(x) = 0$$

Thus for the function $y = F(x)$ shown in Fig. 10,

$$F(\alpha) = F(\beta) = F(\gamma) = 0$$

Any value of x for which

$$f(x) = 0$$

Digitized by Google

is called a "root" of the equation $f(x)=0$, so that α, β, and γ are the roots of $F(x)=0$. (One would like to know why this curious name is used. The name "solution" can also be used, and is preferable in some respects.)

Generally speaking, for any specified function

$$y=f(x)$$

the value of y corresponding to any desired value of x can be determined by simple arithmetic. We are concerned now with the reverse process, *i.e.*, given some particular value of y, *i.e.*, zero, to find the corresponding value or values of x. This may be and usually is a rather more difficult matter. One perfectly general

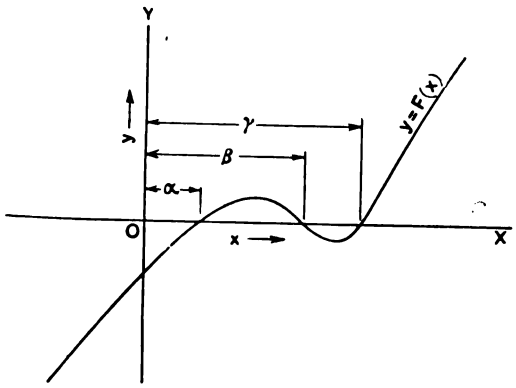

Fig. 10.

method is obvious from the above discussion, and was illustrated in the preceding section for the case of the function

$$y=a^x.$$

The method is to draw the curve of the function and find the points at which it cuts the x axis. This, however, is likely to be laborious. Moreover, the accuracy of the solution will depend on one's skill in drawing, the sharpness of one's pencil, and various other non-mathematical factors. Nevertheless, it is in many cases the only available general method and one that is quite often used. Further consideration will be given to it later on, but for the present we shall be concerned with simpler and more accurate methods which can be applied to certain common types of equation.

(A2) The Linear Equation for One Unknown Number.

The simplest kind of function is that of which the picture is a straight line. (See Fig. 8, October issue.) All such functions can, by appropriate manipulation, be reduced to the form

$$y=ax+b.$$

Corresponding to such functions is the linear equation

$$ax+b=0$$

the characteristic of which is that it contains only known numbers and the first power of the unknown number. As already explained, the solution of this equation is the x co-ordinate of the point in which the line

$$y=ax+b$$

cuts the x axis. Except in the case in which the line is parallel to the x axis (a case of no practical importance) it will always cut the x axis at one point and one point only. Thus there is always one solution to the equation. Once the equation has been reduced to the standard form its solution is simple. Since the numbers $ax+b$ and 0 are equal, the addition of the number $-b$ to each side will not disturb the equality, *i.e.*,

$$ax+b-b=0-b$$

or

$$ax=-b$$

Notice that in effect the b is taken over to the other side of the equation, its sign being changed on the way. In practice one speaks of taking the number or symbol over to the other side. Actually the process consists of the addition of the corresponding number or symbol with the sign reversed to each side of the equation. Since the numbers ax and $-b$ are equal, the division of each by a will leave the resulting numbers or fractions equal, *i.e.*,

$$ax/a=-b/a$$

or

$$x=-b/a$$

Thus $x=-b/a$ is the solution of the equation $ax+b=0$, and the whole art of solving a simple linear equation consists of reducing it to the standard form, after which its solution can be written down at once. For instance, given

$$4(3x-8)=7+4x$$

Digitized by Google

then $$12x - 32 = 7 + 4x$$
and taking the 7 and $4x$ over to the left
$$12x - 4x - 32 - 7 = 0$$
$$8x - 39 = 0$$
and comparing this with
$$ax + b = 0$$
the solution is seen to be
$$x = 39/8 = 4\tfrac{7}{8}$$

Taking a rather more difficult example :—
$$\frac{2}{5x+7} = \frac{3}{8x+2}$$
Multiply each equal fraction by the number $(5x+7)\ (8x+2)$. Then
$$\frac{2(5x+7)(8x+2)}{(5x+7)} = \frac{3(5x+7)(8x+2)}{(8x+2)}$$
and cancelling out the common factors in the numerator and denominator of each fraction (see para. E2, p. 495, August issue)
$$2(8x+2) = 3(5x+7)$$
from which point the solution proceeds exactly as in the first example.

Notice that in general, if
$$a/b = c/d$$
$$ad = bc$$
This is known as "cross multiplication," but it really consists of multiplying each equal fraction by the number bd.

This is all that need be said about the simple linear equation. No perfectly general rules can be laid down for the reduction to the form
$$ax + b = 0$$
but a little common sense and ingenuity are all that is required.

(A3) The Quadratic Equation.

Next in order of complexity to the linear equation comes the quadratic equation, in which the unknown quantity appears in the second power as well as the first. The general type of this equation is
$$ax^2 + bx + c = 0$$
corresponding to the function
$$y = ax^2 + bx + c.$$
The reader is recommended to plot out roughly some such function, *e.g.*,
$$y = 2x^2 - 5x + 2.$$

It will be found that in every case the curve obtained will resemble one or other of the two curves shown in Fig. 11. Such curves are called parabolic and are of great importance in geometry and in applied science. The equation
$$ax^2 + bx + c = 0$$
is sometimes called parabolic also, but the other name is more generally used.

One general characteristic of this sort of equation appears at once from the picture of the typical parabolic function. The curve of such a function will either cut the x axis in two points or not at all. This means that a quadratic equation will either have two real roots or no real roots at all.

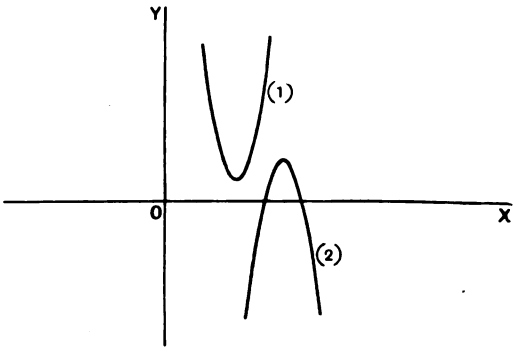

Fig. 11.

As in the general case one method of solving such an equation would be to plot the curve of the function
$$y = ax^2 + bx + c$$
and find where it cut the x axis, but fortunately there are in this case simpler and more accurate methods available.

The easiest method is one for which the way was prepared in paras. D2 and D3 of Section 3 (p. 449 of July issue). The multiplication of any two numbers $(x - \alpha)$ and $(x - \beta)$ gives
$$(x - \alpha)(x - \beta) = x^2 - (\alpha + \beta)x + \alpha\beta$$
Now suppose the numbers α and β are such that
$$\alpha + \beta = -b/a$$
$$\alpha\beta = c/a$$
Then $$(x - \alpha)(x - \beta) = x^2 + \frac{b}{a}x + \frac{c}{a}$$

Digitized by Google

and multiplying each of these equal numbers by a gives

$$a(x-\alpha)(x-\beta) = ax^2 + \frac{ab}{a}x + \frac{ac}{a}$$
$$= ax^2 + bx + c.$$

If therefore we can find two numbers α and β such that

$$\alpha + \beta = -b/a$$
$$\alpha\beta = c/a$$

then

$$a(x-\alpha)(x-\beta) = ax^2 + bx + c = 0$$

Now there are two values of x for which $a(x-\alpha)(x-\beta) = 0$. The first is α for putting $x = \alpha$,

$$a(x-\alpha)(x-\beta) = a(\alpha-\alpha)(\alpha-\beta)$$
$$= a \times 0 \times (\alpha-\beta)$$
$$= 0$$

and in a similar manner putting $x = \beta$ will also make the number zero. Therefore α and β are the solutions or roots of

$$ax^2 + bx + c = 0.$$

For example

$$3x^2 + 54x + 96 = 0.$$

Here $\quad -b/a = -18$

$\quad c/a = 32$

Also $\quad (-2) + (-16) = -18$

and $\quad (-2) \times (-16) = 32$

so that $\quad \alpha = -2$

and $\quad \beta = -16$

will satisfy the condition

$$\alpha + \beta = -b/a = -18$$
$$\alpha\beta = c/a = 32.$$

Therefore the roots of this equation are -2 and -16, and

$$3x^2 + 54x + 96 = 3(x^2 + 18x + 32)$$
$$= 3\{x - (-2)\}\{x - (-16)\}$$
$$= 3(x+2)(x+16).$$

This, however, is inspired guesswork, and inspiration is notoriously erratic and capricious. For everyday purposes we need something more certain, a method which, though neither as speedy nor as exhilarating as the flying leap, can always be relied upon to get there. However the equation is solved, whether by flying or walking, the solution will be the same, so that the roots of the equation are α and β where

$$\alpha + \beta = -b/a$$
$$\alpha\beta = c/a.$$

If α and β cannot be guessed from these clues, is there any other way? Yes, there is another way, depending on a trick which is well worth learning for other purposes also. Since

$$\alpha + \beta = -b/a$$

the squares of these equal numbers will also be equal, *i.e.*,

$$(\alpha+\beta)^2 = \alpha^2 + 2\alpha\beta + \beta^2 = b^2/a^2$$

Also $\quad 4\alpha\beta = 4c/a.$

Since these pairs of numbers are equal, the differences between the pairs will be equal, *i.e.*,

$$\alpha^2 + 2\alpha\beta + \beta^2 - 4\alpha\beta = b^2/a^2 - 4c/a$$

i.e. $\quad \alpha^2 - 2\alpha\beta + \beta^2 = b^2/a^2 - 4ac/a^2$

$$= (b^2 - 4ac)/a^2.$$

But $\quad \alpha^2 - 2\alpha\beta + \beta^2 = (\alpha-\beta)^2$

Therefore $\quad (\alpha-\beta)^2 = (b^2 - 4ac)/a^2$

and since these numbers are equal their square roots will also be equal,

i.e., $\quad \alpha - \beta = \sqrt{(b^2 - 4ac)/a^2}$

$$= \sqrt{(b^2 - 4ac)}/a$$

Now we know both the sum and difference of α and β, and from these both can be determined, for if

$$\alpha + \beta = -b/a$$

and $\quad \alpha - \beta = \sqrt{(b^2 - 4ac)}/a$

the addition of these pairs of equal numbers will give

$$(\alpha+\beta) + (\alpha-\beta) = 2\alpha = -b/a + \sqrt{(b^2 - 4ac)}/a$$
$$= \frac{-b + \sqrt{b^2 - 4ac}}{a}$$

Therefore

$$\alpha = \frac{-b \pm \sqrt{b^2 - 4ac}}{2a}$$

The subtraction of the pairs gives

$$(\alpha+\beta) - (\alpha-\beta) =$$
$$(\alpha+\beta) - \alpha + \beta = 2\beta = \frac{-b - \sqrt{b^2 - 4ac}}{a}$$

Therefore

$$\beta = \frac{-b - \sqrt{b^2 - 4ac}}{2a}$$

Thus the roots of $ax^2 + bx + c = 0$ are α and β, where these numbers have the values given above in terms of the known numbers, a, b, and c.

Digitized by Google

Writing it out in full

$$ax^2+bx+c=a\left(x-\frac{-b+\sqrt{b^2-4ac}}{2a}\right)\left(x-\frac{-b-\sqrt{b^2-4ac}}{2a}\right)=0$$

For brevity, the two roots are usually combined into one expression by writing

$$x=\frac{-b\pm\sqrt{b^2-4ac}}{2a}$$

which means that

$$x=(-b+\sqrt{b^2-4ac})/2a$$

and $$x=(-b-\sqrt{b^2-4ac})/2a$$

are the solutions of the equation. The reader is recommended to confirm the fact that the sum of these roots is $-b/a$ and their product c/a.

As an example, suppose

$$6x^2+5.4x-19.32=0$$

i.e.,

$$a=6$$
$$b=5.4$$
$$c=-19.32$$
$$b^2=29.16$$
$$4ac=-463.68$$
$$b^2-4ac=492.82$$
$$\sqrt{b^2-4ac}=22.2.$$

Therefore the roots are

$$x=(-5.4+22.2)/12=1.4$$
$$x=(-5.4-22.2)/12=-2.3$$

and it can be confirmed by actual multiplication that

$$6x^2+5.4x-19.32=6(x-1.4)(x+2.3)$$

It was stated above that in certain cases the equation would have no real roots at all. If the general solution given above is really general, this fact should be implicit in it; and so it is, for the roots contain the term $\sqrt{b^2-4ac}$, and this will not always exist as a real number. Suppose a and c are of the same sign so that $-4ac$ is a negative number. Then, if $4ac$ is greater than b numerically, b^2-4ac will be negative, and b^2-4ac will be "imaginary." (See p. 563 September issue). Under these conditions there will be no real roots to the equation. For instance

$$29x-4x+1=0$$

has no real solutions for

$$b^2-4ac=16-116=-100$$

and $$\sqrt{b^2-4ac}=\sqrt{-100}=10\sqrt{-1}$$

Subject to finding some interpretation for $\sqrt{-1}$ the roots can be left in the form $(4\pm10\sqrt{-1})/58$, *i.e.*, $(2/29)+(5\sqrt{-1}/29)$ and $(2/29)-(5\sqrt{-1}/29)$. It should be noted and confirmed by actual multiplication and addition that though these are "complex numbers," *i.e.*, numbers consisting of two parts one of which is imaginary, their product and sum are real, being respectively $1/29$ and $4/29$.

For the solution of a quadratic equation, therefore, it is only necessary to reduce it to the form

$$ax^2+bx+c=0$$

and the roots can then be found either by guesswork or by means of the formula: The roots of the equation are the numbers $(-b\pm\sqrt{b^2-4ac})/2a$. (Whether these numbers are real or complex or imaginary, they are still called the roots of the equation.)

As in the case of the linear equation, however, some little ingenuity may be required for the reduction of any given equation to the standard form, but this is only a matter of practice and experience. To take an example, suppose

$$3(x+10)=1/(1+x).$$

Multiplying each equal number by $(1+x)$ gives

$$3(x+10)(1+x)=(1+x)/(1+x)$$

i.e.,

$$3(x^2+11x+10)=1$$

or

$$3x^2+33x+29=0.$$

Again,

$$7\left(x+\frac{1}{x}\right)+3\left(1+\frac{1}{x}\right)=-16.$$

Multiplying each equal number by x and rearranging the terms will give

$$7x^2+19x+10=0$$

and a practised eye would see the roots of this to be $-5/7$ and -2.

(A4) **Equations Reducible to Quadratics.**

Before leaving the subject of quadratic equations it will be well to point out that an equation that looks forbidding and unapproachable at first sight may prove

Digitized by Google

on closer inspection to be quadratic, not in x, but in some simple function of x. An equation

$$ay^2 + by + c = 0$$

can be solved for y, whatever the nature of y may be. If the roots are α and β then

$$y = \alpha \text{ or } y - \alpha = 0$$

and

$$y = \beta \text{ or } y - \beta = 0$$

will satisfy the original equation.

If, now, y is some function of x, say $f(x)$, then these become

$$f(x) - \alpha = 0$$

and

$$f(x) - \beta = 0$$

two further equations in x, which may or may not be solvable but which will in any case be more manageable than the original equation in x. To take a very simple example :—

$$ax^4 + bx^2 + c = 0.$$

This can be written

$$a(x^2)^2 + b(x^2) + c = 0$$

or, writing y for the function x^2

$$ay^2 + by + c = 0$$

If the roots of this equation are α and β, then the original equation is satisfied by

$$y - \alpha = 0$$

and

$$y - \beta = 0$$

i.e.,

$$x^2 - \alpha = 0$$

and

$$x^2 - \beta = 0$$

The factors of the first are

$$(x - \sqrt{\alpha})\ (x + \sqrt{\alpha}) = 0$$

and of the second

$$(x - \sqrt{\beta})\ (x + \sqrt{\beta}) = 0$$

so that the four roots $x = \pm\sqrt{\alpha}$ and $\pm\sqrt{\beta}$ will satisfy the original equation. Notice that the linear equation containing the first power of x was found to have one root. The quadratic, containing the second power of x, was found to have two roots. The above equation, containing the fourth power, has four roots. This suggests, but does not of course prove, that an equation containing the nth power of x will have n roots. This is so in fact and will be proved later.

The recognition of the quadratic form will not be always so simple as in the above example. Take, for instance,

$$x^2 + \frac{1}{x^2} + x + \frac{1}{x} = 4$$

This can be written

$$\left(x^2 + 2 + \frac{1}{x^2}\right) + \left(x + \frac{1}{x}\right) - 6 = 0$$

Now

$$\left(x^2 + 2 + \frac{1}{x^2}\right) = \left(x + \frac{1}{x}\right)^2$$

so that the equation is really

$$\left(x + \frac{1}{x}\right)^2 + \left(x + \frac{1}{x}\right) - 6 = 0$$

and writing y for $(x + 1/x)$, this becomes

$$y^2 + y - 6 = 0$$

of which the solutions can be seen to be

$$y + 3 = 0$$

and

$$y - 2 = 0$$

i.e.,

$$\left(x + \frac{1}{x}\right) + 3 = 0$$

and

$$\left(x + \frac{1}{x}\right) - 2 = 0$$

The multiplication of each side of each equation by x will convert these into two simple quadratics in x which can then be solved for x in the ordinary manner. Here again it is the insight born of practice and experience that sees the essential simplicity at the heart of the apparent complexity.

(A5) The General Equation of the nth Degree.

Having disposed of the linear equation and the quadratic equation, the next in order is the cubic, which contains up to the third power of x or, another way of saying the same thing, is of the third degree in x. The typical equation is

$$ax^3 + bx^2 + cx + d = 0.$$

Then comes the quartic, *i.e.*,

$$ax^4 + bx^3 + cx^2 + dx + e = 0$$

and so on indefinitely.

Unfortunately, however, there are no general solutions for these equations. This is specially unfortunate from the point of view of electrical theory, for the analysis

Digitized by Google

of the behaviour of two coupled circuits involves a quartic, or as it is sometimes called, a bi-quadratic equation, and for this reason practically all textbooks fight shy of it, confining the full discussion to the simpler case of resistanceless circuits, when the bi-quadratic becomes a quadratic in x^2.

Although there are as stated no perfectly general solutions for equations of higher degree than the second, such cases are by no means hopeless. Certain form of higher degree equation can be solved. (Two bi-quadratics were solved in the preceding paragraph.) Also there are certain general considerations relating to equations of any degree which will sometimes point the way to a solution, and which are intrinsically interesting and useful apart from this application. We will therefore discuss briefly the general equation of the nth degree, typified by

$$ax^n + bx^{n-1} + cx^{n-2} + dx^{n-3} + ex^{n-4}, \text{ etc., etc.} + k = 0.$$

Example. — Equations for One Unknown Quantity.

1. Solve the equations :—

(a) $3(x + 27) = 2(x + 4) + 7(x - 9)$

(b) $\dfrac{2}{x + 3} = \dfrac{5}{7(x - 1) + 2(x + 3) + 1}$

(c) $ax + b = cx + d$

(d) $\dfrac{m}{ax + b} = \dfrac{n}{cx + d}$

2. Find where the line

$$y = 3x + 4$$

cuts the axis of x.

Find the co-ordinates of the points on this line for which $y = -5$ and $y = 4$

3. Solve by inspection the equations :—

(a) $x^2 - 5x + 6 = 0$

(b) $x^2 + 5x + 6 = 0$

(c) $x^2 - x - 6 = 0$

(d) $x^2 + x - 6 = 0$

4. Solve the equations :—

(a) $\dfrac{1}{x - 1} = x\left(1 + \dfrac{1}{x}\right)$

(b) $(x - 5) + \dfrac{1}{(x - 2)} = \dfrac{1}{(2 - x)}$

(c) $x^2 - 2ax + a^2 - b^2 = 0$

(d) $x^2 - 2bx + b^2 - a^2 = 0$

5. Solve the equation

$$x(1 + x) + \frac{1}{x}\left(1 + \frac{2}{x}\right) = 0$$

(Convert to an equation in $x + 1/x$)

6. Solve the equations :—

(a) $(x^2 - 4)(x^2 - 5x + 4) = 0$

(b) $(x - a)(x - b)(x - c)(x - d)(x - e) = 0$

(c) $(ax^2 + bx + c)(dx^2 + ex + f) = 0.$

Erratum.

In Examples, p. 618, October issue, *for* $1 + x$ in Example No. 5 *read* $1 + \log x$.

(To be continued.)

Digitized by Google

Recent Developments in Short-Wave Wireless Telegraphy.

By H. Rukop [R401

(*Telefunken Company*).

(*Concluded from page 612 of October issue.*)

III.—Nauen–Buenos Aires Transmitting Experiments.

THE Telefunken Company, directly news was received regarding the striking results that had been obtained with short wavelengths, directed its whole attention to this important fact and forthwith decided to carry out with all speed a trial transmission from Nauen to Buenos Aires, where long-wave transmission, in spite of the employment of the most powerful electric equipment, had shown itself to be unreliable.

The experimental apparatus for short-wave transmission will probably be generally known, so that I need not describe it very minutely. It is obvious that the valve transmitter was the only one suitable for the purpose, and I do not believe that serious results could now be anticipated from any other type. If it is desired to use large outputs, special valves are generally required which, in the first place, must not contain in their connecting leads any considerable self-induction, and, secondly, are arranged for the heavy load which results from the capacity charging current of the electrodes, the sealed leading-in wires being dimensioned for currents up to about 20A. Such special valves for short waves are shown in Figs. 4 and 5. Fig. 4 represents a valve in a glass bulb for a high-frequency output of about 1.5kW with 4,000 volts anode direct current voltage, which works excellently for waves down to 10 metres. Fig. 5 shows types of valves with water-cooled anode, which generally give outputs of 10 and 20kW high frequency, but which in the special short-wave construction are to be reckoned at about 6-8 and 12-16kW.

The first short-wave transmitter, which we manufactured for the contemplated large scale series of experiments, is shown in Fig. 6. This shows in parallel the two valves of the glass bulb type represented in Fig. 4. They are worked in self-excitation and are fed on the cathode side by an accumulator battery, and on the anode circuit by a 4,000 volt direct current dynamo. Special precautionary measures had to be taken to keep the frequency of the transmitter sufficiently constant, so that a pure transmitted note could be received in Buenos Aires. This method, namely, to transmit

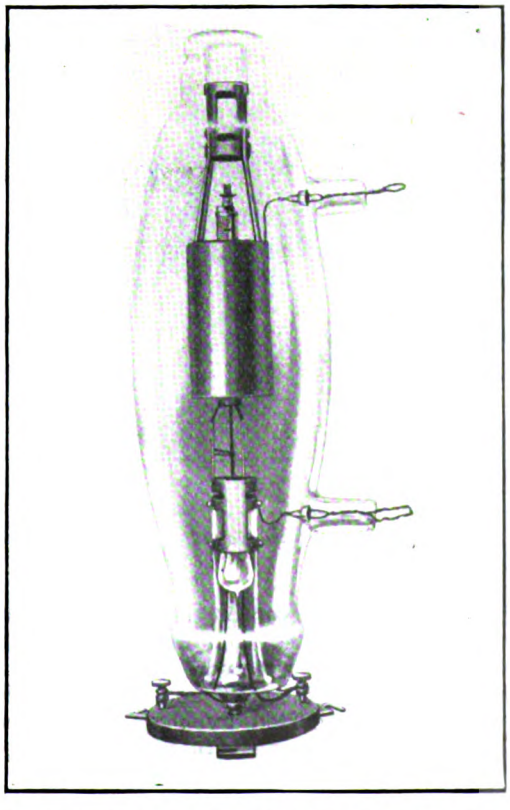

Fig. 4. *Short-wave transmitting valve for about 1.5kW.*

Digitized by Google

unmodulated undamped waves with a frequency of the greatest possible constancy and to receive with heterodyne and pure note, was found to be superior to all others for receiving conditions in Buenos Aires. The transmitter, which originally had the call signal POX, and became later AGA, was housed in a very provisional hut (Fig. 7). The very excellent working of this transmitter was quite unexpected. The fact is, however, that even on the first day of its working, it was received in Buenos Aires. It worked at that time with a perpendicular single-wire aerial about 100 metres high, which was supported by a rope extended between two high masts of the Nauen long-wave aerial.

Of course a merely make-shift transmitter did not meet our requirements, as in the first place it had at once to undertake the telegram traffic and, moreover, we could not effect by its means the experimental variations we desired to make in the transmission to Buenos Aires. We therefore constructed forthwith a second transmitter of approximately the same dimensions, and this was made specially light and transportable, so that its location could be changed with the greatest possible speed. This transmitting station, which was given the call signal POF, consists of two vehicles (Fig. 8), one of which, a motor lorry, contains the machines and other sources of power, and the other, a furniture van of small type, the high-frequency part of the transmitter. This latter can be seen separately in Fig. 9. Fig. 8 shows the whole transmitter erected in the grounds of the long-wave station at Nauen. In the background can be seen the large machine transmitter house of the

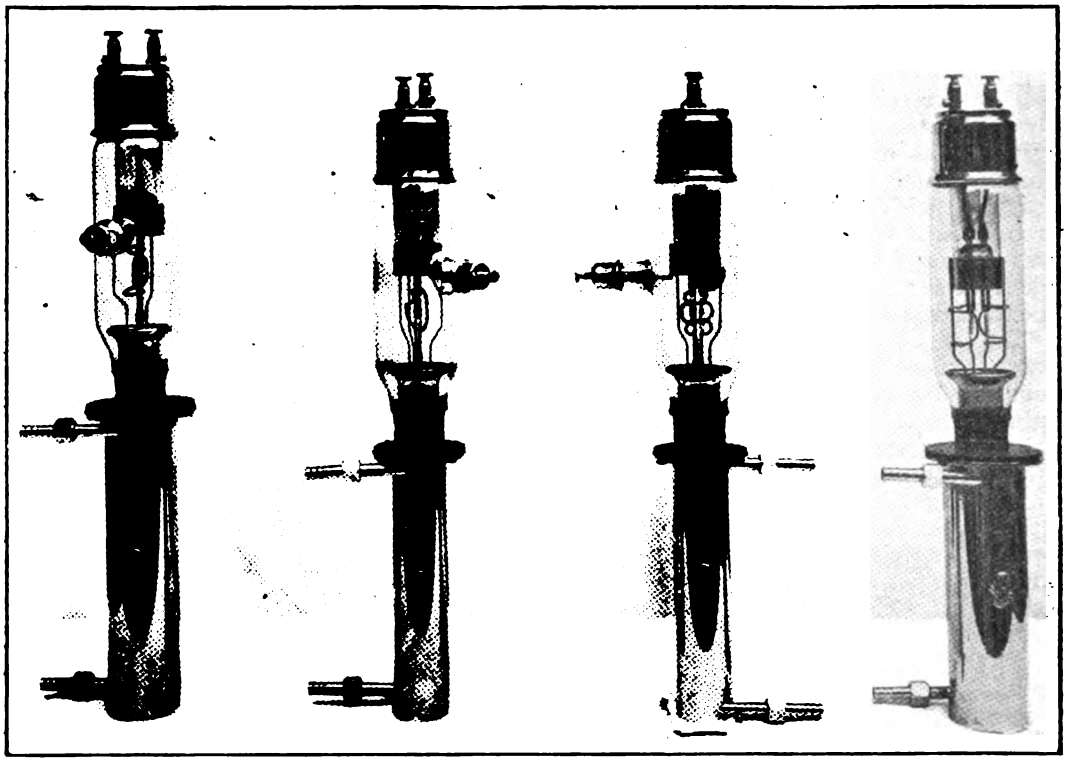

(a) (b) (c) (d)

Fig. 5. *Water-cooled valves. (a and b) Transmitting valves. (c) Short-wave transmitting valve with two grid terminals. (d) Rectifier.*

Digitized by Google

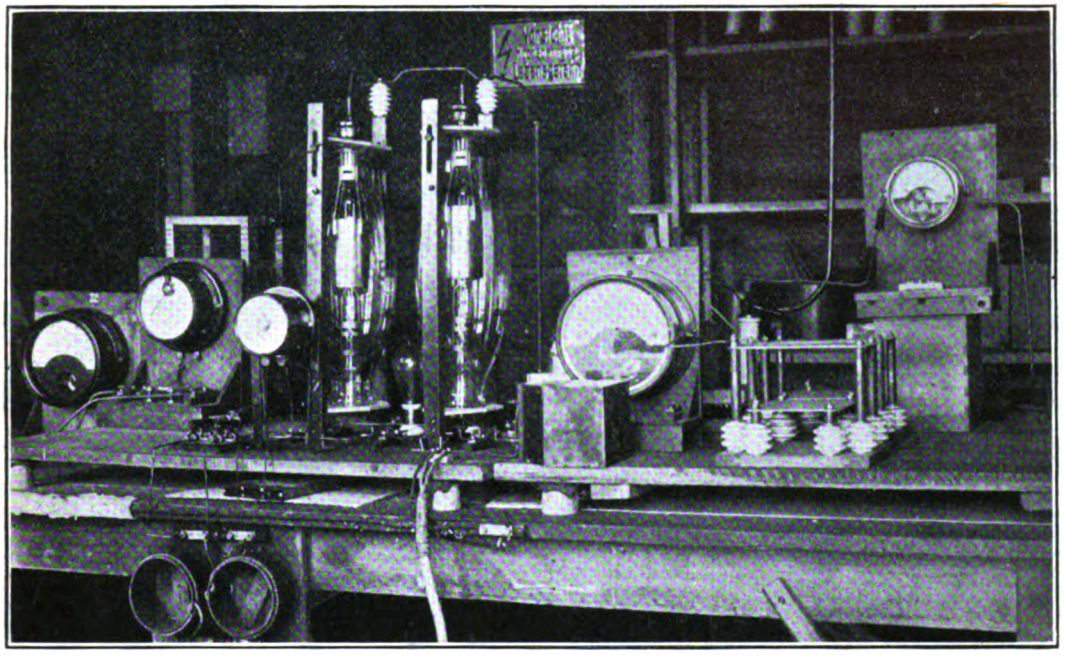

Fig. 6. *Short-wave transmitter AGA.*

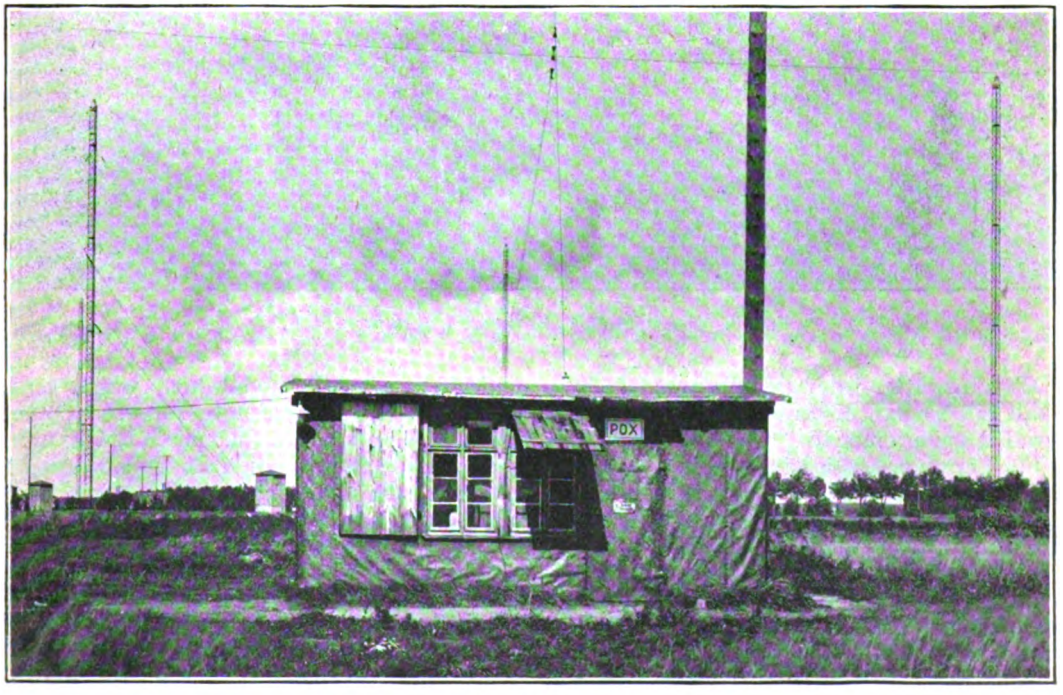

Fig. 7. *Short-wave transmitter AGA.*

Digitized by Google

Transradio Company. The POF transmitter was able, on the one hand, to work on an aerial similar to that of the AGA transmitter, namely, a perpendicular wire of about 100 metres in height, on the other hand it had, as shown in Fig. 8, a special wooden mast about 20 metres in height, with a perpendicular copper tube aerial, which was generally excited in its third harmonic, but often, however, was shortened to 5–6 metres for the purpose of working at a quarter wavelength. Fig. 10 shows the POF transmitter after being removed to a small hill 20 km. distant from Nauen; the aerial is being erected.

Furthermore, a third transmitter with the call signal POY was occasionally used, and this in its electrical construction was exactly like the transmitters AGA and POF, but was erected in the big machine transmitter building of the Transradio Company. Whilst these three transmitters generally gave 2, or at the maximum 3kW in the aerial, a fourth transmitter with the call signal POW was installed, and by this it was possible to obtain up to about 16kW high frequency in the aerial. It contained (see Fig. 11) one or two water-cooled valves of the types shown in Fig. 5 and for a long time was installed in the large machine transmitter building of the Transradio Company, until it was finally removed from there to another small building, because the vibration of the building, in consequence of the machines, exercised a harmful influence on the purity of the oscillations emitted by the set, with the result that the oscillations continually underwent a small modulation, which rendered the heterodyne note impure at the point of reception and thus made the station less suitable for reception at Buenos Aires, which is, as is known, a region subject to unpleasant atmospheric disturbances. At the place to which the station was removed the interference caused by vibration was eliminated to a large extent, so that the heterodyne note became quite pure.

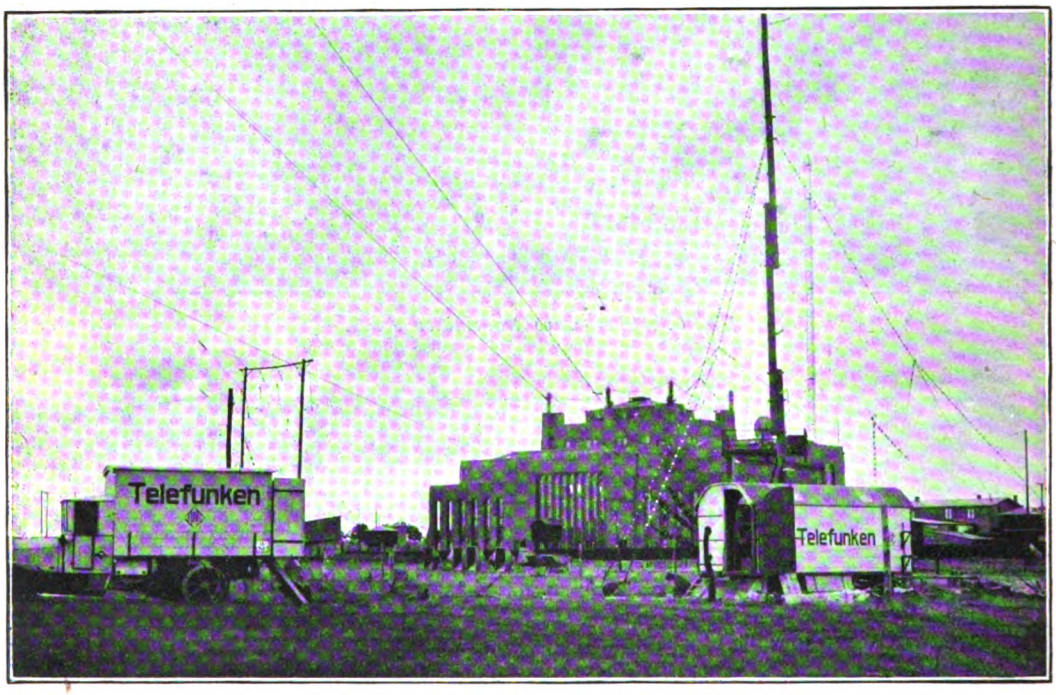

Fig. 8. *Transportable short-wave transmitter POF.*

The wavelengths with which the individual transmitters worked were originally about 70 metres, but, after the first trials, they

Digitized by Google

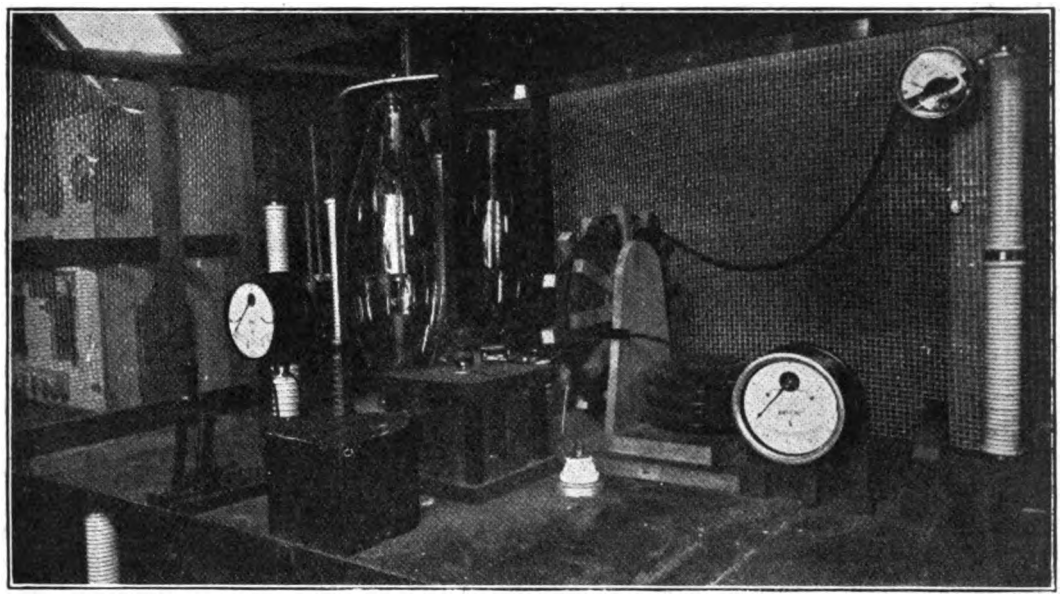

Fig. 9. *Short-wave transmitter POF.*

were very soon lowered in big jumps. Long experimental and working periods were carried out on wavelengths of 40 metres, 25–28 metres, 16–19 metres. At this juncture trials were also made on wavelengths as low as 13 metres. It was very soon found that from the standpoint of atmospheric interference, reception at Buenos Aires was effected very much more favourably on waves of 16–25 metres than with those of about 70 metres the relative intensity of atmospheric interference being in the ratio of about 1 : 10.

A series of separate trial and traffic results will now be shown in curves and definite conclusions, as far as they can be deduced from the various material available, will be given below.

Fig. 12 gives, first of all, by way of example, a typical picture of the effects of fading. The intensity curve represents the reception results obtained at the Geltow receiving station (belonging to Nauen) from transmissions effected by a foreign short-wave transmitting station over 1,000 km. distant, the period of time represented being about 4 minutes. The average constant intensity of reception and likewise the sharp and deep drops which are characterised as "fading" can here be recognised.

There now follows a series of intensity

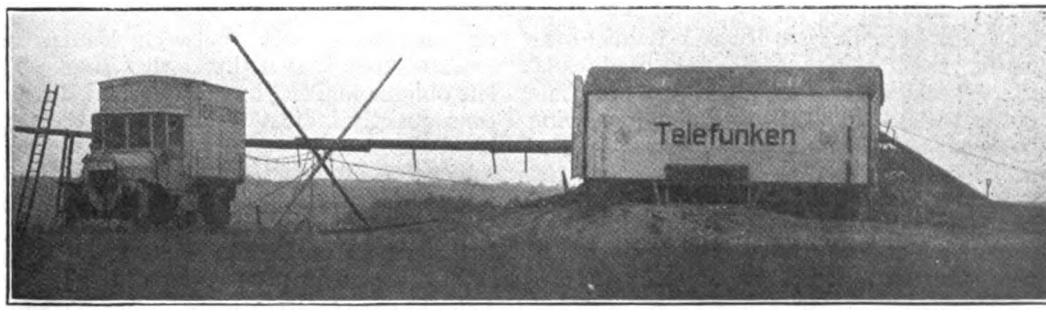

Fig. 10. *Short-wave transmitter POF.*

Digitized by Google

curves which were taken chiefly in Buenos Aires (12,000 km.), some also at Bandoeng, Java (11,000 km.) and at Osaka, Japan (9,000 km.) and which have been communicated to us in due course. The results are shown in relation to the times of the day, as may be seen, for example, in Fig. 13, both at the place of transmission and of reception. In Fig. 13 the ordinates are indicative of the signal strength measured on an arbitrary scale, the abscissæ indicate the times, both the Central European time (upper scale) and the Buenos Aires time (lower scale) being shown. The region lying between these two abscissa axes, each of which corresponds to a place, indicates the route between Nauen and Buenos Aires and is to be regarded as linearly divided. A perpendicular line through the two axes of time therefore indicates objective simultaneity, and from this it will be seen that Central European time and Buenos Aires time differ from each other by five hours, and that Buenos Aires time, corresponding to its westerly situation, is behind the former. The shaded region in Fig. 13 and in many of the following ones indicates night at the relative points on the Nauen-Buenos Aires route. If therefore a perpendicular line runs between the axes of the Central European and the Buenos Aires times completely through the shaded region, this means that on the whole route between Nauen and Buenos Aires it is night at that time. The left oblique limiting line of the shaded region consequently indicates sunset, and the right hand line sunrise.

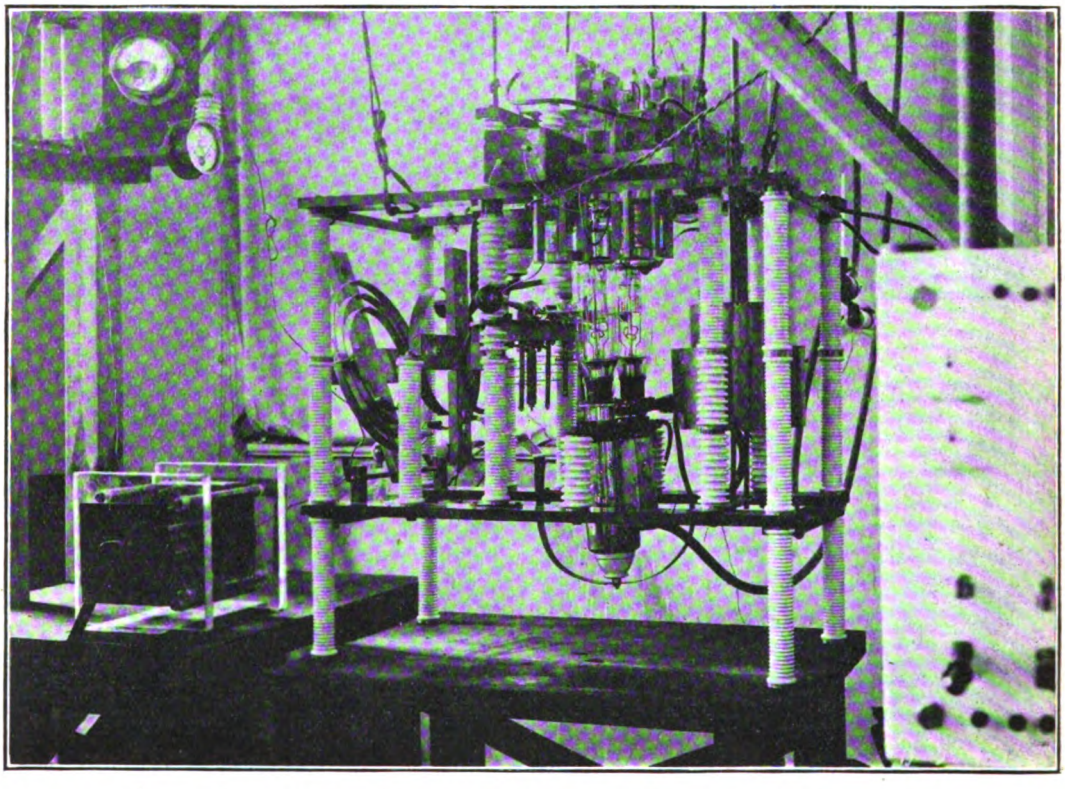

Fig. 11. *Short-wave transmitter POW with two water-cooled valves.*

The two intensity curves shown in Fig. 13 show a very striking result, which recurs in many curves of our series of experiments, but by no means in all. They are therefore a definite and frequent type and show that at times of complete daylight over the whole route nothing was to be heard and that the

Digitized by Google

first signals were heard in Buenos Aires when half of the route from Nauen to Buenos Aires was dark after sunset, that the intensiy then increased as darkness came on, remained fairly constant during complete darkness, and later on diminished and completely disappeared when half the route to Buenos Aires was in daylight after sunrise. One

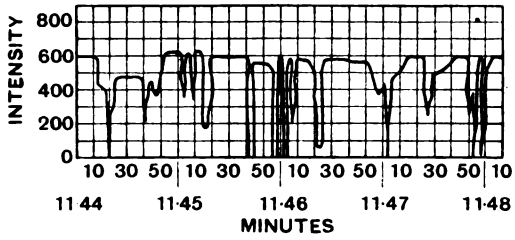

Fig. 12. *Example of reception, disturbed by fading effect.*

must, of course, bear in mind in this connection that the intensity did not remain at an entirely constant level, as is shown in the curves in Fig. 13, but diminished at times in consequence of the fading effect previously described.

Of the two curves shown in Fig. 13, the heavily drawn line indicates the intensity of the AGA transmitter, which worked on a wave of 26 metres and with an output of 2kW, and the dotted line indicates the intensity of

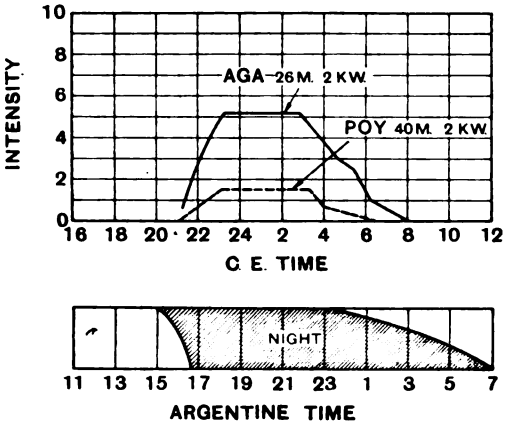

Fig. 13. *Example of receiving results, Nauen–Buenos Aires.*

the POY transmitter, which worked simultaneously with AGA and transmitted on a wave of 40 metres with an output of 2kW. The radiated output should in both cases have been the same, since with such high aerials and such short waves the degree of

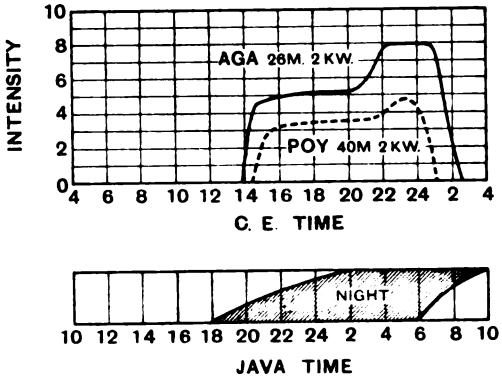

Fig. 14. *Example of receiving results, Nauen–Bandoeng.*

radiation efficiency is extraordinarily high. Nevertheless, the difference in the intensities is very considerable, as the intensity of the 26-metre wave is about four times as great as that of the 40-metre wave—a fact which has almost always revealed itself to us when transmitting over so great distances.

A further interesting example of these circumstances is shown in Fig. 14, which shows intensity curves taken at Bandoeng (Java). The times of favourable transmission are here almost the same as in Fig. 13, namely, from the time of semi-daylight in the evening until semi-daylight in the morning. The differences in intensity between the 40-metre wave and the 26-metre wave are not as large as in Buenos Aires, but they are nevertheless clearly perceptible.

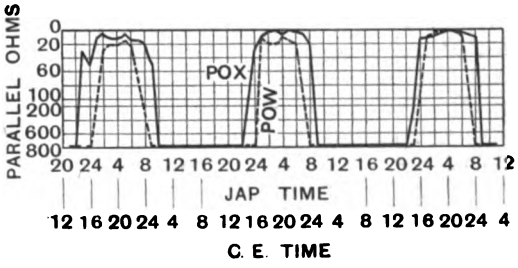

Fig. 15. *Results of a three days' transmission experiment, Nauen–Osaka (Japan).*

Of great interest are the similar conditions shown in Fig. 15, which shows intensity curves which were taken at Osaka (Japan)

Digitized by Google

during an uninterrupted period of transmission lasting three days. In this case POX was transmitting on 26 metres and with 2kW, and POW was transmitting

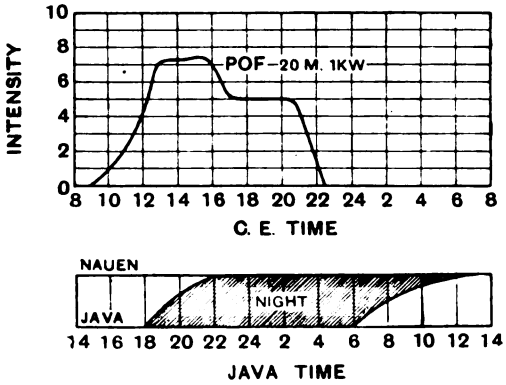

Fig. 16. *Example of receiving results, Nauen–Bandoeng.*

simultaneously on 42 metres and with about 8kW. It is again shown, first of all, that only at the time of complete darkness was good reception obtained. Furthermore, the intensity of the 42-metre wave, notwithstanding the considerably higher output radiated, is almost equal, on the one hand, to that of 26 metres, but, on the other hand, it is clearly seen that in the morning and in the evening the telegraphing period with the 42-metre wave is from 1 to 2 hours

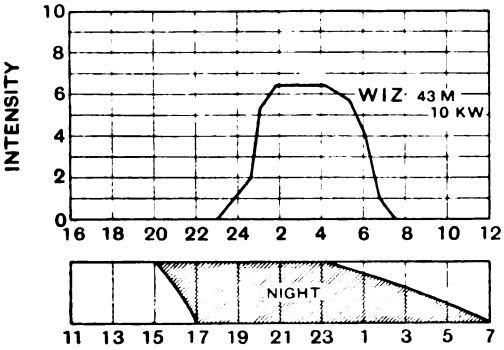

Fig. 17. *Example of receiving results, North America–Geltow.*

shorter, *i.e.*, that the superiority of the 26-metre wave is here very great.

There are, however, very great deviations from these transmission results, which for a long time we were inclined to regard as normal. A type of deviation is shown in Fig. 16: this is a transmission from Nauen to Java on a wavelength of 20 metres. In this case the favourable transmitting time does not extend from the semi-daylight in the evening until semi-daylight in the early morning, but begins as early as the afternoon in complete daylight over the whole distance and ends in a remarkable way at night when there is complete darkness over the whole route. We were unable to discern any system in these deviations.

A deviation similar in principle, but in another direction is shown in Fig. 17; this is a curve taken at Geltow, near Nauen, from the transmissions of a North American short-wave station working on a wavelength of 43 metres. Here, the transmission only

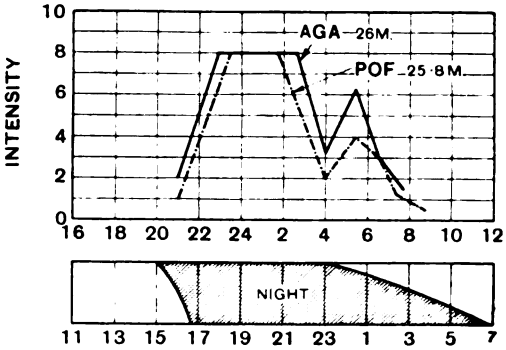

Fig. 18. *Example of receiving results, Nauen–Buenos Aires.*

begins with complete darkness on the entire route, but ends with semi-daylight at sunrise.

A further type of deviation, which, however, is not specially striking, is seen in Fig. 18. In this case, both the commencement and the end of the transmission, as in very many cases, coincide with semi-daylight in the evening and in the morning. Nevertheless, before the end of transmission, namely, at the time when the sun first rises on the route, which in this case was at Nauen, the place of transmission, the signal strength declined greatly, but increased once again considerably before finally dying out. We have experienced a certain number of results of this type also. Fig. 18 is of interest, since, in this case, both the AGA and POF transmitters used two very close wavelengths,

Digitized by Google

namely, of 26 and 25.8 metres. No remarkable differences were, however, found in the quality of transmission.

On the basis of the results shown hitherto, one could easily have taken the view that

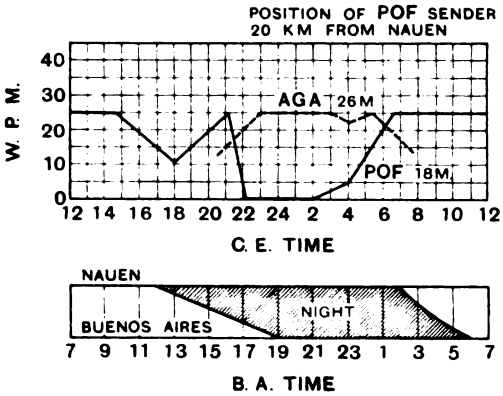

Fig. 19. *Example of receiving results, Nauen–Buenos Aires.*

transmission would only be possible at night, or, in any case, would require during the daytime so enormous an increase of output that in practice it would hardly be possible to attain it. Nevertheless, by numerous series of experiments with different wavelengths down to 13 metres, we have found that there is no general decisive law.

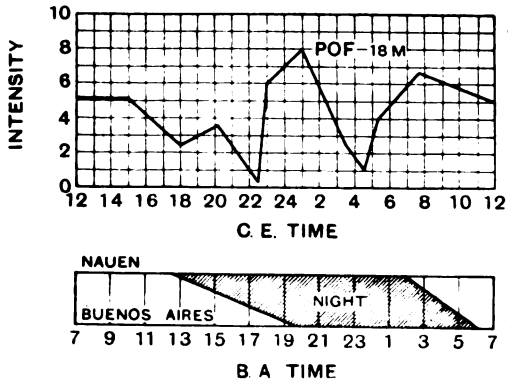

Fig. 20. *Example of receiving results, Nauen–Buenos Aires.*

Some interesting results of day transmissions are shown in Figs. 19, 20 and 21. In Fig. 19 it is a question of two transmitters working simultaneously throughout the day, namely, AGA on a wave of 26 metres and POF on a wave of 18 metres. The POF transmitter was erected on this occasion on a small hill, 20 km. distant from Nauen. Here the remarkable result obtained was that the 26-metre wave could also be heard at the usual time from semi-daylight in the evening until semi-daylight in the morning. On the contrary, the 18-metre wave revealed an entirely different behaviour, in that it was audible throughout the whole day and only died out for a few hours during the time of complete darkness. The same POF transmitter, at the same place and on the same wave, gave a still better result on another day (see Fig. 20). It was in fact audible throughout the whole day, even during the time of cessation during complete darkness, shown in Fig. 19, and even attained its maximum intensity at this time and only

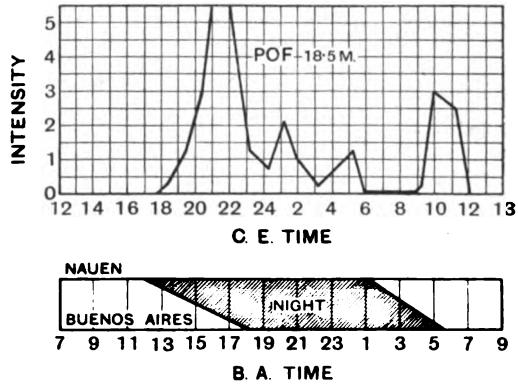

Fig. 21. *Example of receiving results, Nauen–Buenos Aires.*

towards sunset and also before sunrise showed a short but considerable diminution of intensity. Unfortunately, however, such results cannot be obtained every day and on one of the succeeding days a result was obtained as represented in Fig. 21, *i.e.*, adequate transmission occurred from evening until morning and, likewise, during complete daylight for about three hours during the morning. In any case, it would appear that for transmission to Buenos Aires at least, the most favourable conditions result from wavelengths between 18 and 28 metres, and that at certain times the waves round about 18 metres are the best. Numerous attempts were made with still shorter waves, and good results were occasionally obtained with 16 metres, but, in the majority of cases,

Digitized by Google

the results were bad, and nothing or almost nothing was heard in Buenos Aires or Java. With a wavelength of 13 metres signals could, in fact, be perceived at Buenos Aires, but the intensity was nothing like adequate for the handling of telegraphic traffic.

This result, namely, that when the wavelength is reduced to about 15 metres transmission suddenly becomes perceptibly worse, coincides very remarkably with a curve showing the silent zones, which is to be found in the above-mentioned paper of A. H. Taylor and E. O. Hulbert[7]. In this, the authors show, on the basis of observations and extrapolated assumptions, that the silent zones become extremely

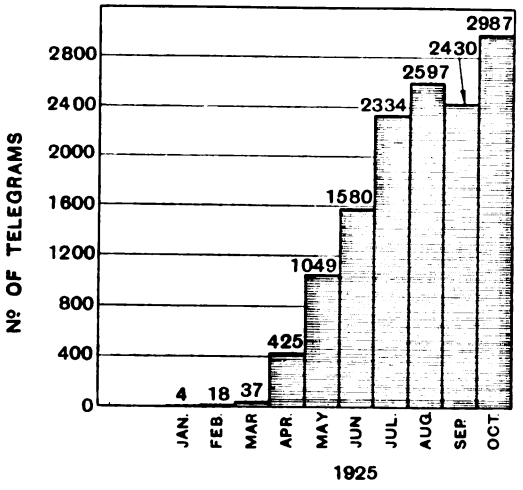

Fig. 22. *Short-wave telegram traffic, Nauen-Buenos Aires from April to October, 1925.*

broad in the region of 10 metres, and that a return of the energy from the atmosphere no longer takes place. Whether the results which we have obtained with waves in this region are a confirmation of the curve, I should not like to affirm at present, as the results are not sufficiently numerous and are not represented so systematically that one could speak of an actual confirmation.

By a suitable searching for wavelengths, by transmitting with several transmitters at the same time, and by using the most favourable hours of the day, etc., we finally succeeded in establishing an almost completely reliable night service with Buenos Aires, which was used throughout by the Transradio Company. Fig. 22 gives a very interesting idea of this; the increase of the telegrams transmitted since the short-wave transmitters were brought into operation can clearly be seen. The traffic worked with so great a reliability that on several days Nauen was the only station in Europe and North America which could get telegrams over to Buenos Aires, so that Transradio had often to undertake the traffic of other transmitting stations in Europe and North America, which it did successfully. It can be said, therefore, that in spite of relatively provisional means when short-wave transmitters were introduced, extraordinarily successful results have been obtained, thanks to frequent variations in the trial conditions and the indefatigable efforts expended upon them.

It will likewise be of interest to point out that in a large number of aerial trials, in which the linear aerial was sometimes perpendicular, sometimes oblique, and sometimes even horizontal, we were never able to ascertain any conclusive influence of the aerial length from $\lambda/4$ (about 5 metres) to an aerial 125 metres long excited in high harmonics. With a tiny aerial of a total height of 5 metres and a 2kW transmitter, the most astonishing transmission results (12,000 km.) were obtained at certain hours of the day. It will nevertheless be seen from these results that transmitters of 2kW are in general too weak for a reliable traffic and that transmitters of 20kW up to perhaps 50kW must, for reasons of reliability, be regarded as normal, especially if it is desired to extend the traffic for several hours in the morning and evening, or in fact throughout the whole day.

IV.—Conclusion.

It will probably be clear to any technical man that it is of extraordinary importance to be able to state which are the most favourable wavelengths at any time and from any place in the world to any other place, and whether and how they vary in the course of the day and with the time of the year, and in what way they are dependent upon atmospheric and other geophysical condition. There is, however, certainly no doubt that the condition of ionisation of the atmosphere must exercise the greatest influence on the whole course of the route of transmission, and that

Digitized by Google

such influence might, in turn, be dependent upon certain contingencies outside the earth, as, for example, the incoming of electrons from the sun-spots, etc. But even if one does not wish to invoke reasons lying outside the earth, we have on the earth itself so enormous a number of variables that it would probably be a herculean task to assemble them systematically for a complete solution of the problem of transmission. If, therefore, I were asked to draw any conclusions at all from the material set forth above, I should have to say that it was not possible to do so. It can safely be affirmed that with all the results we obtained, waves of 40 metres and under showed themselves to be considerably superior to waves between 40 metres and 100 metres and that a clear optimum between 26 and 18 metres can be recognised. In any case it must be stated that the optimum cannot in this case be ascribed purely to the propagation of short waves, but that there is the further favourable circumstance that atmospheric interference has very little effect upon the reception of such short waves.

In order to be able to state which are the favourable day waves and which the favourable night waves, the various results are not sufficiently conclusive and consistent, although one would at times be greatly inclined to regard as general a result that recurred many times. In any case I should prefer to confine myself to communicating the results to all, for their knowledge and use, without drawing any useless or premature conclusions. The experiments will be actively pursued by us. My colleague, Dr. A. Meissner, is especially engaged in investigating the influence of some reflector arrangements and of the position of the electric vector. He will himself make statements regarding them in due course.

In conclusion, I should like to point out that a large number of persons from the laboratories of the Telefunken Company are taking part in the solution of these problems and by their industry and their devotion to the subject have made possible the communication of these results.

I should like to thank especially, in the name of the two Companies above mentioned, those stationed at the foreign receiving stations in Argentina, Japan and Java, who have supported us so kindly and effectively in this difficult and trying series of experiments.

Digitized by Google

The Relative Values of Long and Short Waves in Wireless Communication. [R040

A Discussion before the Radio Society of Great Britain.

THE Radio Society of Great Britain held the first meeting of its 1926-27 session at the Institution of Electrical Engineers, Savoy Place, London, W.C.2, on Wednesday, 22nd September, when Dr. W. H. Eccles opened a discussion on "The Relative Values of Long and Short Waves in Wireless Communication and their Future Possibilities." Brigadier-General Sir H. Capel Holden, K.C.B., F.R.S., presided.

The CHAIRMAN, opening the proceedings, said: Ladies and Gentlemen, it seems to be hardly necessary for me to introduce Dr. Eccles to you, but I can, I am sure, on my own behalf and on yours, welcome him very heartily. He is going to start a discussion to-night on a subject which at the present time is a very important one, and he has entitled it: "The Relative Values of Long and Short Waves in Wireless Communication, and their Future Possibilities." I will now call upon him to commence.

DISCUSSION.

Dr. Eccles: I hope you will permit me first to read a letter from Sir Oliver Lodge, our President, regretting that he is not able to be with us to-night. He writes:—

"I wish I could attend your discussion of the relative advantages of long and short waves, at the meeting of the Radio Society to-morrow. I feel as if the tremendous radiating power conferred by high frequency has not yet been thoroughly exploited. The shortness of wave may not be an advantage for transmission purposes, though the high radiating power is. But there are so many surprising things which take place in the upper atmosphere that we may discover an optimum wavelength suitable for transmission at different times in the day; and it is to be hoped that the combined activity of the members of the Radio Society may gradually give us the information necessary.

"The work of amateurs may be of the utmost value in this respect. The theory of emission is simple enough; but about the theory of transmission, complicated as it is by the effect of sunlight and all the other atmospheric conditions, we have still much to learn.

"Let me wish all success to the Society in its enterprise and activities during the coming winter."

It is now about five years since the use of short waves for long distances began to attract the enthusiastic attention of amateur investigators. The first amateur transatlantic tests of February, 1921, and those of the following winter, enabled dozens of amateurs on both sides of the Atlantic to get into touch on waves of 200 metres length or less. At the end of 1922, the Pittsburg broadcasting station KDKA was transmitting on a wavelength between 90 and 100 metres and this gave amateurs all over the United States an opportunity of studying short wave transmission conveniently. Before that date the general experience with short waves was that they were only really useful for short distances; when they did get through to long distances the performance was known as freak transmission. During 1923 waves shorter than 150 metres became more and more common as commercial firms and amateurs took up the study in increasing numbers.

We have now had twenty years' experience of long waves and four years of short waves in long-distance radio telegraphy. For very long waves, say over 15,000 metres, the facts are relatively simple; these waves travel almost equally well by day and night and the distance to which good signals can be transmitted depends merely on the power employed. But waves of medium length, say 1,000 metres, are different, they travel much better by night than by day. In both cases the strength of the signals falls off steadily as distance increases, at any rate after the first few hundred miles, and therefore to send signals to the Antipodes for twenty-four hours in the daytime requires 1,000 kilowatts or more and very long waves. As a broad rule the number of hours of service can always be increased by increasing the horsepower.

Our four years' experience of short waves, that is waves shorter than 200 metres, has been crystallised in the recent writings of a number of technical men, chief among whom may be mentioned Hoyt Taylor of the American Navy and Heising, Schelling and Southworth in the Bell Telephone Company of New York. Taylor classified the reports which hundreds of amateurs sent to him about his station. His results for a power of 5 kilowatts may be summarised as follows. In the daytime a wave of 100 metres long can be picked up as far as 200 miles away; a wave 50 metres long at 100 miles, a wave 30 metres long can be picked up at all distances up to 50 miles, and is inaudible at points between 50 miles and 500 miles, yet is audible again at all distances between 500 and 1,500 miles. The space over which signals are inaudible forms a circular silent zone over which the signals jump; this is called the "skip." Shorter waves have a longer skip—for instance, 15-metre waves cease to be audible at 10 miles, skip 1,500 miles, and are

Digitized by Google

then audible with some uncertainty up to 3,000 miles. At night time in winter the 100-metre wave of 5kW output has been heard at all distances up to 8,000 miles; the 50-metre wave up to 10,000 miles; the 40-metre wave skips 500 miles and goes to all distances beyond. The 30-metre wave skips 4,000 miles, the 20-metre wave skips 7,000 miles, and both are heard at all distances beyond. But the 15-metre wave, after travelling a few miles, skips off the earth for good. Similar things happen on summer nights, but the skip is less marked.

The work of Heising, Schelling and Southworth has consisted of actual measurements of strength at various distances. They find it varies from season to season, from hour to hour and even from second to second. Their results are so numerous that I cannot do justice to them. They find that in the daytime the strength of all waves between 111 metres and 16½ metres falls off with increasing distance as fast as, or faster than, the long waves, but at night time short waves of 111 metres and 66 metres travel much farther. What happens to waves still shorter at night, is complicated by the skip distance. As a broad rule, after the skip the signals for a time get stronger the farther you go—an amazing conclusion. It is to be noted, however, that there usually is a time in the middle of the night, say from midnight to 3 a.m., for waves of 33 metres and distances of 1,000 miles, when the signal will not get through. Remembering that midnight occurs at different instants at different places on the globe, we see that the reception of these signals at distances of thousands of miles is complicated very greatly by their midnight vagaries.

The writers of this very valuable paper lay stress on the instability produced by these various conditions. They have made special observations on fading. They find that the rate of fading may be very slow or may be as quick as 100 times a second. Sometimes one wave fades while another of slightly different wavelength increases in strength. Some of these phenomena occasionally make radio telephony impossible because of distortion. Nevertheless very useful service can be rendered in both telegraphy and telephony by short waves; but it is important to choose the wavelengths carefully for any given task. For telephony to 200 miles distance use 100 metres; for 500 miles use 50 metres, and then it may be possible to maintain a 24-hour service. For 1,000 miles use 30 metres in the day and about 60 at night. For transatlantic work the wavelength should be altered between 100 metres and 20 metres from time to time in the endeavour to maintain fairly continuous touch.

From the whole mass of scientific observations now available in the technical literature I conclude that short waves are certainly more useful than long waves for distances up to 1,000 miles. Beyond this distance the relative utility of short and long waves depends upon the kind of work to be done and the time when it is done. Amateur investigators will always find the short waves vastly more interesting and much cheaper to install than the long waves for the purposes of international communication. For commercial purposes countries that need to be in touch only a few hours daily will also adopt short waves. On the other hand, a commercial firm which is running a long distance service in competition with cables will find the long waves more generally trustworthy. In such a service it is often necessary to ensure the delivery of messages within a very limited time of handing them in; in that case, long waves are best during certain hours of the day and will be used even though the plant is more costly. But there is a possibility that in the course of time, methods of changing from one short wave to another exactly as atmospheric variations demand, may be developed, and that will put the short wave on a level with the long wave, but may, of course, at the same time make the short wave plant as costly as the long wave plant.

These are scientific facts that have arisen out of the study of short wave propagation, but I hope we shall hear from some other speakers their impressions gathered from personal experience of short wave and long wave communication. Experience is as valuable, very often, as measurement; I have dealt solely with measurement, and, as you all know, have omitted a great many other considerations.

Admiral Sir Henry B. Jackson: Dr. Eccles has dealt briefly, but fully, with the subject. With regard to the distances he has tabulated, at which various waves are receivable, I think probably some of us here may find that they do not agree with them; I do not personally, and I have taken a great many measurements during the last year or so, and from my own experience I do not quite agree, especially about the 30-metre wave. I have received on 30 metres, or practically 30 metres, very well indeed, and the statement that it is only received up to 50 miles in the daytime is, I think, not always correct, *e.g.*, this afternoon I have received it at 80 miles without any difficulty, so that I think it is open to argument whether or not the figures are right at all times, although I daresay the general trend is perfectly correct, especially the great skips of the various wavelengths, but small changes in wavelengths may make very considerable differences in the strength of signals, and in picking up or losing them; and there is no doubt that we have not got to the bottom of the subject yet, and I fancy it will mean a good many years' practical experience, by commercial companies, the services, amateurs, and others, before we get reliable results, because I am sure we shall find the summer and winter results may be quite different. As our President, Sir Oliver Lodge, says, amateurs can help a great deal in this, and if they will help we shall be very glad indeed, but I think that if they do help they must work systematically. They must not jump from station to station and from wavelength to wavelength, but should work on one wavelength and one station for a week or two, then go to other wavelengths and other stations, and then, after a month or two come back and repeat their previous experiments. Systematic observations as to the distances and times at which they can always receive the different wavelengths will be very useful. Certainly this short wave work is in its infancy. We have had 20 or 30 years with long waves, but only a few years with short waves, and short waves are subject to influences which have very much less effect on the

Digitized by Google

longer ones. Of course, one of the great advantages of short waves is that there is so much less interference generally, and less interference by atmospherics, but I notice that on some short wavelengths, especially between 30 and 50 metres, interference is getting rather troublesome. So many stations use those wavelengths, and if you pick up a receiver and tune to one of them you will find three or four stations within a few metres of it. I have noticed it with 50 metres, and there is a good deal of interference with 36 metres as well, so there will have to be legislation to deal with interference with the short waves as with the long waves. However, the subject is very much in the air at present, but if amateurs will help systematically I am sure the results will be of very great value in settling the point as to at what distances and at what times these different waves are receivable.

Mr. Gerald Marcuse: I am afraid it would take too long to deal with this subject as I should like to, but perhaps I may touch upon one or two points. As Sir Henry Jackson has said, it is necessary to carry out tests with one station for many nights. I have done it for nights on end with stations in all parts of the world, and the signals certainly vary from night to night. There s no doubt about it that, whatever there is above the ether, or if there should be a Heaviside layer, the density of that outer atmosphere does vary, and the waves penetrate deeper into it at certain times than at others, so that the angle of deflection varies. There must be truth in that. Take, for instance, the wavelength of 45 metres; there is very little skip distance. It is a rather curious wavelength, because it seems to be that in very bright sunlight the skip distance is very pronounced. I was carrying out tests at intervals all day long last Sunday, during the bright sunlight, and there is no doubt that there was a skip; it practically skipped the British Isles. At Belfast, for instance, a distance of 300 miles, the signals were weaker in sunlight than on a dull day, and in Gloucester (Dursley) they were practically inaudible. But that is a very rare occurrence, and you rarely get a skip on 45 metres in England. I have worked on 45 metres, and on the 32 to 34 metres wavelength, and with the latter there seems to be always a skip, almost of England. In the evening the 32-metre wave seems to be suitable for distances such as 1,000 miles and over. The distances given by Dr. Eccles do not coincide with the results of our experiments, but we must take into account the fact that these signals vary every day; you could not guarantee a short wave to behave in the same way every day, if you take six months on end. Also, there is no doubt about it, they vary from east to west and from north to south. I have tried a given power, say 500 watts—of course, I am talking in terms of hundred-watts, whereas Dr. Eccles is talking in kilowatts—under different conditions, using the same type of aerial, of course, suitable for both wavelengths, for communicating with the Antipodes, and I find that on some days one wavelength is better than the other, and on the whole I find that 45 metres is more suitable for morning communication, whereas the 30-metre band is distinctly better for evening working with the Antipodes. But it is most difficult to make general comparisons owing to varying conditions at different points. Topographical conditions play such a great part in short waves. It seems to me, if we are considering short *versus* long waves, that the whole point is that of atmospheric conditions. I am not conversant with the long wave records, or how those waves behave, but it seems to me that although high frequency amplification is much easier on long waves than on short waves, the atmospheric conditions must on occasion, especially in the tropics, make it impossible to carry out two-way communication with long waves, whereas with short waves, even if you are on the Equator, on most nights you can use, say, 30 metres with practically no interference at all. Fading is another matter which has been the subject of extensive experiment. Apparently there is something operating between two stations long distances apart which affects communication, although you may have a perfectly steady wave at both of the transmitters; even with crystal control there is some effect between the two stations, which must be atmospherical. Nobody, I think, has yet discovered the real cause of it. I certainly agree with Admiral Sir Henry Jackson with regard to interference, and I think the whole question of interference will have to be dealt with pretty severely, owing to the use of broadly tuned waves and unrectified alternating current. There is no need to have a spreading wave. Yesterday morning, for instance, in the course of receiving, we got a back kicking of a key from 6 o'clock until 9 o'clock. That kicking of the key was spreading over the whole wave gap from 20 metres up to 50 metres. My last point is that, of course, you must consider the relative powers used on short and long wavelengths, and the distances covered.

Mr. H. Bevan Swift: Mr. Marcuse has forestalled me in pointing out that the behaviour of short waves is not consistent; what happens on one night is entirely different on others. I can quite appreciate the position of the radio engineer who has to install a large station. He is not in a position to experiment; he has so much capital put into his hands and must put down a station which will work and immediately produce commercial results. It is obvious, therefore, that he would to a large extent avoid anything of an experimental nature on a big scale, and I can quite understand that this is the reason why so many radio engineers, when installing large stations, have avoided the short wave. They must be able to get signals through to the distant receiving station under all practical circumstances, and communication has to be assured. On the other hand, the fickleness of short waves is a thing which appeals to the amateur experimenter. He is accustomed to a certain percentage of failures and more or less expects them. In fact, the happiness and the pleasure is in looking forward to finding a solution for the various difficulties. No doubt in time we shall have some new principle of short wave working which will put the thing on an entirely different footing, but, unfortunately, we have a long way to go yet. The Heaviside layer is a thing we cannot control, but we may be able to devise some

Digitized by Google

means of beam transmission or some means by which we can actually aim at the station we want to transmit to, and that is a line of investigation which I am sure will appeal to every transmitter. We have got to circumvent in some manner the extreme subtlety of short waves and put them on to a practical and commercial footing. As regards telephony on the short waves, of course there is going to be the one great trouble of modulating the wave properly, and those who have tried to modulate the 45-metre wave have obtained very curious results. The modulation varies from night to night. That alone is against the commercial use of a telephone band at 45 metres, and, I think as Dr. Eccles has said, the 100 metre wave is far more suitable for telephony than the high frequency waves below 50 metres. There is a vast difference between 100 and 45 metres, almost the same difference that we observe between the two bands of 100 metres and, say, 5,000 metres. All the peculiar phenomena of short waves become noticeable down below about 70 metres, so that I think that for telephony, with the added difficulty of avoiding distortion and getting pure speech through, it is more likely that from about 100 metres, say, to 150 metres will be the band that will ultimately come into common use, whereas the low powers required, sharpness of tuning giving narrow peaks and the great advantage that you can crowd so many stations into a few metres, will confine the short wave mostly to C.W. work.

The Chairman: Mr. Shaughnessy is here, and although he has said he is not prepared to speak, I am sure that if I appeal to him on behalf of the members present to tell us some of his experiences he will do so.

Mr. E. H. Shaughnessy (Engineering Department, G.P.O.): The subject of the discussion which Dr. Eccles has opened is the relative values of long wave and short wave communication. With regard to the former, I think that at our Rugby station we have reached the maximum of power which one can economically apply to a long wave station. Since I gave my lecture on Rugby to this Society* we have been able to use the whole of the aerial, and are now getting 750 amps in that aerial. We get very good and consistent results. If one wants better results, then it is more economical to spend money on the receiving plant, and for long waves certainly one wants very selective and efficient aerials and selective receivers. With regard to the statement that has been made that short waves can be received in the tropics on certain nights, I can assure you that long waves can be received in the tropics on most nights. With regard to the skip distances, our experience with short wave transmission is that it is by no means constant, and from the data available it is not possible to accept any definite figure for definite waves. I do not want to depreciate the value of the experiments carried out by Hoyt Taylor—I think they are very valuable—but he is relying for his results on a number of people co-operating with him: some good and some unreliable, and consequently his results are necessarily approximate. Even if one continues experiments over very long periods between the same places; taking simultaneous measurements of field strength, it is very difficult to deduce any definite law from the results which vary so much from day to day. In connection with some long distance, short wave Admiralty experiments, our station at Banbury and the Admiralty station at Horsea were listening out for signals from a distance of 4,000 or 5,000 miles. We got very good signals at Banbury on one wavelength, whilst Horsea did not get them at all; on the other hand, Horsea got very good signals on another wavelength, and we did not get any at all at Banbury. The distance apart of those two stations in this country is approximately 100 miles, and the distance over which the signals came was something like 4,000 miles, so that I think you will see the difficulties that arise. We have a few short wave, low power stations which are carrying out experimental and commercial work, and they are placed so as to be able to take up traffic during the best hours of the day for short wave work and to enable us temporarily to shut down the more expensive high power stations. I think that a big field for short wave stations lies in that direction. There is one thing I view with alarm in Dr. Eccles' opening remarks, and that is, the suggestion that, having found a wave that can be used at 9 a.m. between here and, say, South America, we use another at 10 a.m., another at 11 a.m., and so on throughout the day. Just imagine all the stations on the Continent chasing each other round like that! For the future short wave commercial stations will, I think, have to be content with not more than two waves per station, one wave for one part of the day and another wave for another part of the day. I can confirm what has been said about the utter unreliability of anything definite in the way of a service for any definite hours of the day so far as short wave, low powered stations are concerned. You will get a lower powered station to work over long distances quite well one day for certain hours, but on the next day it will not work during those hours and may during some other hours. There is no doubt that the large amount of attention which is being given to short waves, both by amateurs and by professional and commercial people, will tend to develop a more stable condition of short wave communications and lead to a more definite knowledge of the law of transmission over various distances and various parts of the globe.

Mr. Philip Coursey: This discussion serves to emphasise that, although we have been carrying out experiments on short waves for some years, we have still a very great deal to learn about them. In fact, in carrying out experiments of this nature—at least, I think so—the more one finds out, the greater is the vista opened out for further exploration. One rather important point occurred to me when Dr. Eccles sketched a diagram on the board showing the various skip distances for different wavelengths for different times of the day. The variation of distances of transmission during the day only emphasises the atmospheric influences of the Heaviside layer, but it seems

* "The Rugby Radio Station," by E. H. Shaughnessy. R.S.G.B., 23rd June, 1926.

Digitized by Google

to me that it might also be influenced to a very great degree by the nature of the aerials used for transmission, and possibly also, to some extent, by the nature of the waves. I think Dr. Eccles has been an exponent of the consideration of the angle at which the radiation is emitted from an aerial, depending upon what is connected to it, and that might probably also be influenced to some extent at least by the shape of the aerial itself and by the shape of surrounding objects, such as leading-in wire or earth connections, and so on. If there is anything in the idea of the Heaviside layer affecting the directions and distances to which these waves are transmitted, it would seem that the aerial itself must have an important influence upon that transmission also. In other words, if we transmit energy at different angles or in different directions, that must have an important effect on the skip distance. Such a consideration would rather seem to raise the possibility of at least carrying out some experiments—it may or may not prove practicable commercially—with multiple transmitters on different wavelengths at the same time from different but adjacent stations. From the remarks already made it would seem that if two, or probably three wavelengths could be used simultaneously for the same transmission there would be a much better reliability factor than is obtained when only one is used. Such tests, at any rate, would probably give interesting results, particularly if the signal strengths, on two or more simultaneous transmissions, could be measured at the receiving stations. It might tell us a great deal more of the mechanism of transmission that would separate transmission from different stations on different wavelengths. The larger number of wave bands available in the shorter wavelengths might render such a scheme of transmission possible on a commercial scale, should it prove of any value as compared with the single wave. It might also be more valuable than changing the wavelength at different hours of the day. I do not know whether any such tests have been made, but if not I put forward the suggestion as one perhaps worthy of careful attention.

Mr. Maurice Child: There are several points in connection with both long and short waves which I think it would be useful to bear in mind when we are considering the possibilities of the two forms of transmission. It has been suggested that for commercial work the long waves are probably the most satisfactory, the reason being that we know, after some twenty years' experience, how to generate those waves as efficiently as possible, and we also know probably a good deal more exactly how to receive them. We also know the sort of variations we are likely to expect over the distances at which it is contemplated the stations will work. Mr. Bevan Swift suggested that the wireless engineer, or radio engineer, had to set up his station in accordance with the requirements of the service and the amount of money put forward. I am going to suggest that the radio engineer is almost a non-existent person. The engineer to-day who has to put up a bridge, for instance, has to know every detail connected with the materials he is going to use—the strains and stresses, the sizes of the bars and the girders to carry a definite load—and he can produce with wonderful exactitude the results he is required to produce. On the other hand, we all know that it is a very speculative business to put up a wireless station to get through to certain places at long distances—say, distances of 3,000 or 4,000 miles and over. At any rate, the usual practice has been to put up a station of sufficient power so that under almost the worst possible receiving conditions the signals will, somehow or other, get through. Yet, what do we find? We find that in some cases—and I am going to cite one in a moment—with all the power we put into our long waves for those stations, strengths vary enormously from day to day in exactly the same sort of way as the short waves vary, and I am not aware of any data available yet which gives us the relative variations in signal strength on the long waves in proportion to the power used, and the relative variations of signal strengths of, say, short waves of below 100 metres in proportion to the power used in transmitting. I think that data on that would be very useful. I was speaking the other day to an old pupil of mine who has been working for a long time on a commercial—600 metre—coast station on the Gold Coast, and I asked him how he found the reception of Press news from Rugby. What I wanted to get at was whether the signals from that station, received on the Gold Coast, were constant, reliable, easy to read, and so on. He said, "Yes, Rugby is a very good station to read; when it really comes through well, it is extremely good." I said, "What do you mean by 'well'?" He replied, "If we want to get really good reception of Press news there on the long wave, we invariably get on to Bordeaux." "But," I said, "Rugby is probably using more power than Bordeaux, or in any case the wavelength is more constant." He said, "It may be, but the fact remains that on the Gold Coast the best reception is always from Bordeaux." The difference in distance between Rugby and Bordeaux in relation to the Gold Coast is not very much, say between 300 and 400 miles, so that there we have the same unreliability with the long wave that we get with the short wave transmission. Perhaps it is not so to the same extent, but nevertheless it exists. It makes one rather careful in speculating as to the future possibilities of the use of the long and the short waves when one still has these enormous variations to contend with. I think that one of the great difficulties we have to overcome with short waves before we can make further and very useful measurements is to make some big improvements in our methods of receiving. The majority of amateur workers, and also some professional workers, have realised that for short wave reception it is necessary to employ as simple detecting arrangements as we can—and, of course, simplicity is always a desirable thing, provided we can also get reliability. It does seem to me that an enormous amount of work has to be done, in connection with the development of the short wave, to make up for the variations in strength that we get in the short wave. If we experiment only on the simple detector and the amplifying valve at receiving stations we shall stick almost where we are, but if we can use a receiver which can be increased in its range of sensitivity, as long wave receivers can be, by high

Digitized by Google

frequency stages, we can get over the difficulties we find at present. That seems to me to be one of the important things. There is one other point I should like to mention. When we put up a comparatively high power transmitting, short wave station, say 20kW or less, the signals come through at the distant station—by "distant" I mean perhaps in the Antipodes—with enormous strength, but there is a difficulty which has arisen, which apparently nobody foresaw at the time when high power was employed, and that is that although you get strong signals you cannot read them—or, at any rate, it is very difficult to read them. It appears that at great distances the wave from the transmitter goes direct round the world to the receiver, it then goes round the world again and comes to the receiver, and then again the third time, so that you never get a quick cut-off, which is necessary when reading the Morse code. The dot ends with a succession of dots, and that makes the reception of high speed signals very difficult. Perhaps the solution would be to cut down the power of the transmitting station.

Mr. Hogg: I am glad that Mr. Coursey mentioned the possibility of the variation in skip distances by altering the constant of an aerial circuit. Some years ago I did a great deal of work, at the suggestion of Dr. Eccles, in getting across the Atlantic on 100 metres, and I found that the variation of skip distance does not apply merely to the short waves, but also to the longer waves of 200 metres; it varies just as much, and if you use a small amount of power you can readily get the same effect. On 100 metres it is possible for a signal to be inaudible on the east coast of America, and to get a powerful signal halfway across America, and vice versa, just as you desire. Another problem is the extraordinary variation in transatlantic signals at quite regular periods of a week or so. I believe that about once every week or ten days you find all the American amateurs transmitting—and there are hundreds of stations—will vanish completely for about a week, and then come back again; they all vanish at the same time and come back at the same time. No other stations in any other part of the world seem to do the same thing; it only happens between England and America, on approximately 40 metres. Results have been obtained by Pickard recently in connection with polarisation, but they have not been based on a very large quantity of experimental work, and it would be interesting to have Dr. Eccles' opinion on them. With regard to Admiral Sir Henry Jackson's remarks on the 30-metre wavelength, I think the general experience of most amateurs has been that the 32 to 34-metre waveband is almost inaudible in England at any time during the day or night from 30 or 40 miles onwards. As to the fading of audio frequency, that has been cured by many amateurs to a great extent by the use of crystal control. That is also the case with KDKA and WGY, and I do not think there has been any distortion since they used crystal control. There is another kind of skip which I have noticed when working over distances of 50 or 70 miles. I have been working with a small transmitter on a car recently, doing some very short wavelength experiments, working on a schedule with a station in London. At times we have both been on and could hardly hear each other, but maybe we hear each other later with terrific strength. We get a sudden cessation of signal strength at such a short distance for no apparent reason. In another case we knew a man was transmitting at a certain time, but his signals were quite inaudible, but in half an hour's time there he was as large as life, and perhaps as strong as usual. There seems to be something unusual to cause all these rather peculiar skips, which require investigation. It seems to me that there is a great deal to be done in the way of polarisation, and that seems to be the most interesting field at the moment. I should like to hear what Dr. Eccles has to say about it.

Dr. Eccles, replying to the discussion, said: Admiral Sir Henry Jackson objected to the sharply defined figures that I gave of skip distances, and other speakers supported him in saying that they did not believe the figures were so hard and fast as I indicated. I think I ought to say that Mr. Hoyt Taylor, in his paper on the subject, says that all he has done is to take the average of a great many rather different figures in deducing, for instance, to get that 50 to 500 miles as the skip distance of the 30-metre wave in the daytime. It is well known that an average, although it occurs sometimes, does not occur often. The things that are not average occur more often than the things that are average. I have often heard it said that the average height of members of the population of the United Kingdom is 5 ft. 9 in. and several decimal points, but probably nobody of exactly that height exists. In the same way, I can quite believe that these skip distances probably are never hit on in actuality. Mr. Bevan Swift has employed the phrase "the fickleness of short waves." That phrase explains excellently why these skip distances are never the same two days running or even two hours running. The other investigators I have quoted actually say that the behaviour of the 66-metre wavelength to-day is very like what that of the 45-metre wavelength was yesterday, so that, you see, these things have to be taken as very rough approximations. All this is supported very strongly by Mr. Marcuse's statement that one cannot guarantee that a short wave will do the same thing every day. He pointed out, too, a thing which I did not mention in my opening remarks, namely, that a very important advantage of short wave over long wave transmission is the portability and smallness of the apparatus. You can have it so small that explorers on the Amazon can communicate with Mr. Marcuse in England, carrying their kit with them, in a way which would be absolutely impossible with long wave transmission without taking a barge. (Laughter.) You will notice, by the way, that the advent of short waves has altered the whole aspect of exploration. The explorer now is in a very different position as compared with five years ago. Wherever he goes, whether it be the North Pole, the South Pole, Central Asia or anywhere else, he can keep in touch with civilisation if he wishes. Mr. Shaughnessy's illuminating remarks, drawn from the experience of the Post Office, I was very glad to elicit from him, as they will go on record in our Proceedings, and will be of great value to the people

Digitized by Google

who take the trouble to read them. It is very remarkable that stations so near together as Horsea and Banbury can record absolutely different experiences on the same signal at the same instant, but again the explanation is the "fickleness" of short waves. Both Mr. Coursey and Mr. Hogg dealt with the effects of the shape of the aerial, the length of the aerial relative to the wavelength, or the inclination to the ground of the aerial, and Mr. Hogg reminded me that Pickard, in a recent paper, had gone very deeply into the question of the polarisation of the waves as affecting propagation. It would take too long to do justice to Mr. Pickard's work to-night, but I think it would form a very good subject for continuing the discussion of short waves on some other evening, either at an informal meeting or a full meeting of the Society. I hope we can make room for that amongst the papers and discussions that are to come. The remarks of Mr. Child, to the effect that the radio engineer does not exist because there is so much guesswork in what he does, and because nature comes up against him and falsifies his prophecies, seem to me to apply just as much to, say, the civil engineer. After all, the structures which the civil engineer builds are intended to stand the test of the elements, but when a tornado, such as that in South Florida comes, all his calculations are falsified and the buildings fall down. I think we are very much in the same boat, and have come to the conclusion that there is no such thing as an engineer at all. (Laughter.) His remarks about the difficulties that must arise in short wave reception at high speeds if the signals go echoing round the world are very apt, and they do indeed constitute a thing that will have to be combated if that echo hypothesis is correct. It resembles the problem of echoing in long telephone cables, and it may possibly be got over by analogous methods. That remains for the future, however. As regards reception on the Gold Coast from Rugby and Bordeaux, it is quite true that sometimes in some places Bordeaux is more legible than Rugby, and vice versa. The configuration of the surrounding country has a great deal to do with it. If a chain of mountains happens to come into the "line of fire" between Rugby and the Gold Coast, and does not come into the "line of fire" from Bordeaux to the Gold Coast, one would expect—and it has been demonstrated again and again—that the signals would be stronger over the clearer path.

The Chairman: I understand that Mr. Marcuse has a very interesting suggestion to make, though it has nothing to do directly with long or short waves, and I should like to call on him to tell the meeting what it is. There will be no necessity for us to come to any decision to-night, but a statement from him now will be an easy and rapid way of letting the members of the Society know what his proposal is, and they will have a certain amount of time to think about it.

Mr. Marcuse: I do not wish it to be thought that I am trying to preach economy to the Radio Society of Great Britain, although there may be times when it is needed and when the Society may not be too flush with funds, but I do feel that the meeting to-night indicates the community of interest between the members of the Society and the members of its T. and R. Section. You may not know that the membership of the T. and R. Section is mounting up, and we shall soon be 1,000 strong, and I do feel that we ought to merge our interests by holding joint meetings. The Radio Society is holding a meeting to-night, and the T. and R. Section may be holding a meeting next week; you are discussing short waves, and we might be discussing short waves. Therefore, I think we might merge the meetings into one. It has been suggested that we hold two meetings one month and one the next, but if we merge our interests we might possibly hold two every month, or, if special circumstances arise, probably three a month. I notice that the meeting to-night includes a good many members of the T. and R. Section—they are all members of the Society itself, of course—and it seems to me that whatever subjects are discussed at the meetings of the Society or of the T. and R. Section, they are allied and of interest to all of us. It will make my work much easier, as well as the work of the gentlemen responsible for arranging the meetings of the Society, and we shall all be happier. I do not know whether you want to discuss the proposal, but if the Council would consider it—and I have the honour to be a member of the Council—perhaps it would be better for them to do so.

The Chairman: You have heard the proposal made by Mr. Marcuse, and I hope you will think over it. To my mind, it is a very generous one, and shows that the T. and R. Section does not want to keep all its knowledge to itself. I feel that the field is one which is so vast and varied that there is any amount of room for any number of experimenters to take it up.

Digitized by Google

Abstracts and References.

Compiled by the Radio Research Board and reproduced by arrangement with the Department of Scientific and Industrial Research.

R100.—GENERAL PRINCIPLES AND THEORY.

R111.—New Deductions of the Electromagnetic Equations.—W. Swann. (*Physical Review*, 28, pp. 531-544, Sept., 1926.)

R112.—Über Raumstrahlung (Concerning space radiation).—A. Meissner. (*Zeitschrift für Hochfrequenz.*, 28, 3, pp. 78-82, Sept., 1926.)

On the hypothesis that with space radiation transmission should be directed upwards at an angle of 60-80°, the advantage of employing a horizontal antenna (dipole) follows. For conducting the energy to this antenna, parallel leads were utilised several wavelengths long and 8-10 cm. apart. Tuning was not effected on the antenna, but through a rotary condenser in the transmitter coupling coil. The solution of the antenna problem for the present is a horizontal antenna or combination of horizontal antennæ in conjunction with a metal reflector directing the radiation upwards at an angle of 60-80°. An experimental arrangement carried out at Nauen is described. This arrangement improved reception at Buenos Aires two to fivefold, and reception was often possible, particularly in the daytime, when nothing was heard in the case of the transmitter with the vertical antenna; also with longer waves (up to 300m.) the horizontal antenna was found superior to the vertical.

R113 and R114.—Long Distance Radio Receiving Measurements and Atmospheric Disturbances at the Bureau of Standards in 1925.—L. Austin. (*Washington Academy of Sciences Journ.*, 16, pp. 398-408, 19th Aug., 1926.)

A résumé of the measurements made by the Bureau of Standards on long-wave, long-distance signal intensities and atmospheric disturbances during 1925, with the addition of some comparisons of the field intensities and disturbances from 1922 to the present time. The results are tabulated and shown graphically. No certain relationship has been discovered between sunspots and abnormal signals, but in many cases there appears to be an undoubted effect of the more severe magnetic storms upon transmission. Further conclusions drawn from these experiments have already been given (these abstracts, Sept., 1926, p. 570). Observations in Washington show that in winter the prevailing afternoon disturbances come roughly from the direction of eastern South America or perhaps partly from Africa. In summer the direction is south-westerly, apparently from Mexico or the south-western United States. This is in accord with the idea that disturbances generally originate over land and are most intense in the afternoon and evening in the regions where the sun passes very nearly overhead.

R113.—Temperature Affects Radio Signal Strength.—(*Amer. Inst. Elect. Eng. Journ.*, 45, 9, p. 863, Sept., 1926.)

That temperature influences the strength of radio signals is the conclusion reached from experiments made at the Bureau of Standards. Two years ago, Dr. Austin observed a decided increase in the signals received at Washington from Tuckerton and New Brunswick, during the passage of severe cold waves over the eastern States. Further research now indicates that whenever the temperature rises along the signal path there is a tendency for the signal to drop, and conversely, a falling temperature tends to produce a stronger signal, though these temperature effects are often masked by other unknown influences. It is stated that doubtless temperature changes influence the waves which are reflected or refracted from the Kennelly-Heaviside layer, 60 miles or more above the earth's surface, rather than the waves which glide along the ground, since no marked change is observed in signal intensity due to long continued rain or drought, the presence of snow, or the presence or absence of frost in the ground.

R113.—A Suggested Wireless Transmission Theory.—C. Snell. (*Electrical Review*, 99, p. 363, 27th Aug., 1926.)

A reply to Mr. Barton's letter (these abstracts, October, 1926, p. 635) stating that the shorter wavelengths are more efficient both by day and by night provided that the transmitting apparatus and its associated aerial system are specially designed for such wavelengths. Mr. Snell also explains that his articles were framed so as to distinguish as completely as possible between the variations in efficiency occasioned by changes in aerial and apparatus design and those exclusively attributable to the characteristics of the media intervening between transmitter and receiver.

R113.—Curved Path of Wireless Waves.—A Mallock. (*Nature*, 118, pp. 443-444, 25th Sept., 1926.)

A letter on the question as to why wireless waves follow the curvature of the earth. The writer states that since with visible light in air the shorter the wavelength the less the velocity, while the refractive index for X-rays is practically unity, there must be a condition in which a decrease of wavelength is accompanied by an increase in velocity, at and after a certain shortness of wavelength is reached. Similarly at the other end of the spectrum it is not impossible that the velocity may drop as the wavelength increases, although at present a physical explanation may be wanting. A case of diminished velocity with increased period would occur in air if the waves were of such great length that the heat due to compression had time

Digitized by Google

to diffuse. If it were found that for wireless waves the velocity increased about one part in four thousand per mile of height above the ground, the writer continues, the reason for such waves following the curvature of the earth would require no further explanation, and until experiment proves that there is no such change, it would be reasonable to impute the observed curvature of path to this kind of cause.

A graphical construction for determining diffraction effects is added.

R113.—Recent Developments in Short-Wave Wireless Telegraphy.—H. Rukop. (*E.W. & W.E.*, 3, 37, pp. 606-612, October, 1926.)

A first instalment of a full translation of the Telefunken publication *Neuere Ergebnisse in der drahtlosen Telegraphie mit kurzen Wellen*, also appearing in *Zeitschrift für Hochfrequenz*, 28, 2, pp. 41-50, August, 1926.

R113.—Short Wave Experiments.—R. Durrant. (*Wireless World*, 19, pp. 331-332, 8th September, 1926.)

An account of tests, between a yacht cruising in the Norwegian fjords and a station in Hampshire, which show that reliable communication can be maintained day and night on low power, over 600 miles, where ordinary long-wave spark and C.W. signalling will not penetrate beyond a few miles.

R113.—Can We Signal to Mars?—E. Appleton. (*Wireless World*, 19, pp. 359-360, 8th September, 1926.)

The conditions under which short waves penetrate the Heaviside layer are considered, and it is estimated that somewhere between 1 and 10 metres long distance transmission would be found to become impossible, because all the waves leave the earth.

R113.4.—A Test of the Existence of the Conducting Layer.—G. Breit and M. Tuve. (*Physical Review*, 28, pp. 554-575, September, 1926.)

The following abstract is given :—

A method previously proposed for a test of the existence of ionisation in the upper atmosphere has been developed, and definite proof obtained of the existence of echoes from the upper regions. The echoes are present for 70-metre waves with an 8-mile base near Washington, D.C. The effective height of the layer is between 50 and 130 miles. At times multiple reflections are present. Radio fading is shown to be not only an effect of interference between the ground and the reflected waves, but also to a large extent an effect of the presence or absence of reflected waves. A seasonal variation in the effective height between summer and fall seems to exist. A smaller diurnal effect is also suspected. The height seems greater in the fall than in the summer and greater in the afternoon than in the morning. Effects of wavelength and of location have been studied. A quantitative discussion of the results enables one to eliminate too gradual distributions of electron density. The measured retardation is shown to correspond to a height greater than the actual by amounts differing for various polarisations of the refracted waves.

R113.4.—Audibility of Explosions and the Constitution of the Upper Atmosphere. —F. Whipple. (*Nature*, 28th August, 1926, pp. 309-313.)

From the reports on the audibility of the experimental explosions arranged by the International Commission, Prof. Maurain has concluded that the high temperature (about 300° F.) postulated by Lindemann and Dobson for the atmosphere at 60 km. and above, is not high enough to account for the recurring of the sound rays, and that Von den Borne's hypothesis of the hydrogen atmosphere must be invoked. He goes so far as to hazard the estimate of 92 per cent. of hydrogen in the constitution of the atmosphere at 116 km. The author shows that Prof. Maurain's hypotheses are at variance with certain deductions from the observations and that reasonable agreement with the observations is obtained by assuming that the rise of temperature begins at 30 km. and increases regularly up to 50 km., at which level and beyond the temperature is 380°. The probability that the transition from the uniform temperatures of the stratosphere to much higher temperatures begins at the comparatively modest height of 30 km. makes it desirable to extend the range of soundings by free balloons to that height, and beyond, which should not be impossible by the proper choice of balloons.

R113.6.—Polarisation of Wireless Waves.—S. Hollingworth. (*Nature*, 118, p. 409, 18th September, 1926.)

A brief outline of observations made at Slough and Exeter on the transmissions from Sainte Assise (14,350 m.), from which the two chief facts that emerge are :—

I. Long waves as well as short may be elaborately polarised by refraction in the upper atmosphere during the night. This effect is also present, though to a less degree, during daylight in winter, and occasionally even during daylight in summer.

II. The effect persists during the hours of darkness, remaining fairly steady after the sunset period is over, and consequently it cannot be caused by the mere temporary displacement of the reflecting surface from its normal horizontal position owing to the ionic recombination occurring at sunset, but must be an essential feature of the mode of refraction.

R.113.6.—The Kerr Effect in Wireless Transmission.—E. V. Appleton. (*Nature*, 118, p. 514, 9th October, 1926.)

Evidence is briefly reviewed pointing to the rough generalisation that long wireless waves are deviated by reflection and short waves by refraction. Taking into account the earth's magnetic field on the motion of electrons, a Kerr effect (rotation of plane of polarisation, on reflection from a sharply-defined magnetised surface, through an angle depending on the intensity of magnetisation) would be expected for long waves at night, which prediction seems to find fulfilment in Mr.

Digitized by Google

Hollingworth's recent observations (*Nature*, 18th September, p. 409). A consideration of the magneto-ionic formulæ for the conductivity and dielectric constant of ionised gas shows that, in cases of reflection, there is a certain critical height in the atmosphere above which the inductivity in the direction of the earth's lines of magnetic force is appreciably different from that in a direction at right angles. This is the height at which the frequency of the electron collisions with gas molecules is equal to the angular frequency with which the electrons normally spiral round the lines of magnetic force. Estimates of mean free paths and air pressures at different altitudes give a value for the critical height somewhere about 70-80 km. When the waves are deviated below this height, practically no abnormal polarisation occurs, but when deviated above, both Kerr and Faraday effects will be produced according to the wavelength. The fact that the Kerr effect is found at night and not by day indicates that the ionised layer passes from or below this critical region to a height appreciably above it at sunset.

R113.8.—AURORA POLARIS.—(*Nature*, 11th September, 1926, pp. 366-368.)

Observations of the aurora and related phenomena, particularly in the regions where the aurora and associated ionisation are most strongly developed, are of considerable radio interest, owing to the connection existing between ionisation in the upper atmosphere and wave propagation. This article reviews the "Records of the Aurora Polaris" by Sir Douglas Mawson, giving the detailed observations from the three stations occupied by the Australian Antarctic Expedition between 1911 and 1914. These records will be followed by two other parts in the same volume—"Records of Magnetic Disturbances" and "Records of the Range of Transmission of Wireless Signals."

R113.8.—VARIATION OF PENETRATING RADIATION ON THE JUNGFRAU.—W. Kolhörster and G. von Salis. (*Nature*, 118, 9th October, 1926, p. 518.)

Recent research with more sensitive instruments appears to confirm Kolhörster's early belief in a cosmic origin for the penetrating radiation. The radiation is found to reach maximum intensity when certain celestial regions culminate, for example, the Milky Way, and specially the regions of Andromeda and of Hercules, which is explicable as a consequence of the minimum length of the path of rays from these regions through our atmosphere at culmination.

R113.8.—SOME ELECTROSTATIC DISTURBANCES UPON THE EARTH WHICH SEEM TO BE CAUSED BY DISTURBANCES UPON THE SUN.—F. Sanford. (*Physical Review*, 28, p. 429, August, 1926.)

Abstract of a paper presented at the June meeting of the American Physical Society in California.

An instrument used for the past five years for measuring daily variation of the surface potential of the earth at Palo Alto shows very great deviations from the ordinary daily range of variation at certain times. These deviations have some of the characteristics of magnetic storms, but they seem to occur most frequently during the forenoon hours, while magnetic disturbances occur at the same time all over the earth. Since very great earth potential disturbances have accompanied some of the great sun spot disturbances, an attempt has been made to find whether the disturbances of earth potential regularly accompany the passage of sun spots across the sun's central meridian. The data given in the paper indicate the probability, but not the certainty, of a physical relation between the two phenomena.

R113.8.—THE RECURRENCE OF MAGNETIC STORMS.—C. Chree. (*Nature*, 4th September, 1926, pp. 335-336.)

R114.—PREMIÈRES OBSERVATIONS RELATIVES AUX PARASITES ATMOSPHÉRIQUES EN AFRIQUE OCCIDENTALE.—First observations on atmospherics in West Africa.—H. Hubert. (*Comptes Rendus*, 183, pp. 368-370, 2nd August, 1926.)

For this investigation at Dakar, a frame receiver was used, similar to that employed by Rothé at Strassburg (*L'Onde Electrique*, 2, 1923, p. 7). The sounds heard in the telephone are the same as those described by Rothé and Lacoste under the names of "décharges" and "craquements et claquements." By discharges, Rothé denotes manifestations that are less frequent and last a fairly long time, up to five seconds, having an intense metallic noise like a gong with a clear high note, and maintaining during their whole duration the same intensity and pitch. Claquements et craquements are the disturbances known as clicks and grinders.

Discharges.—In agreement with Rothé's observations, discharges are in direct relation with lightning flashes. It appears, moreover, that, in W. Africa at least, discharges alone belong to this category. For each wavelength there is an orientation of the frame, towards the east, for which the frequency is a maximum, and another direction, often very comparable, for which there is a maximum intensity of discharge. Except in the case of a very near storm in an azimuth very different from the east, these directions are also very near those observed for clicks and grinders. In practice the azimuth of greatest frequency of discharge is much the same for all wavelengths except one, varying between 6,000 m. and 15,000 m. with the time, for which the frequency is a maximum, with progressive decrease above and below this wavelength. During the period of the year when there are no lightning flashes, no discharges are recorded. In winter they are only observed when there is a flash of lightning within a radius of less than 300 or 400 km. The frequency is in direct relation with that of the lightning flashes. Audibility is far better when the storm is approaching the observer than after it has passed him by.

Clicks and grinders.—These occur at any hour in all seasons, and are not determined by the lightning flash. For these also there is maximum frequency for a certain orientation of the frame (near the east) and a variable wavelength (often

Digitized by Google

about 13,000 m.), with progressive decrease on either side of this orientation and wavelength (atmospherics are relatively rare above 22,000 m. and below 200 m., but one must go well below this latter figure to eliminate them). The azimuth of greatest frequency is not fixed. In general it gradually shifts by a small amount (exceptionally 75°) towards the north from morning to evening. About sunset it shifts suddenly towards the south. It varies further according to the season: in winter it is ordinarily near the east or east-south-east and in the dry season the east-north-east. Apart from any meteorological disturbance, the frequency of clicks and grinders is much greater by night than day, there is a sudden increase from the time of sunset and marked diminution after midnight. It is probable that at nightfall there is no increase, in the absolute sense, of the atmospherics produced, but simply an increase in the atmospherics picked up, owing to the better audibility. For the twelve hours of sunshine each day, the frequency varies with the season. For instance, in winter there are 30 clicks to the minute at 8 a.m., 60 at 2 p.m., 80 at 5 p.m.; in the dry season there are 40 at 8 a.m., 55 at 2 p.m., and 45 at 5 p.m. The frequency does not change with the approach of cold fronts or by horizontal displacements of the atmospheric air, but it systematically increases with vertical displacements of masses of air in the aerial currents, whether rythmical or accidental. Things happen as if the clicks and grinders were due to oscillating discharges of minor importance, emitting neither light nor sound, that occur every moment—at an altitude of at least some thousands of metres and at distances of some tens of kilometres or more from the receiver—between masses of air of very different potential brought into the neighbourhood of one another through an energetic stir up caused chiefly by violent ascending currents.

R114.—Lightning.—(*Nature*, 2nd October, 1926, p. 482.)

Further brief correspondence between Dr. Simpson and Dr. Dorsey concerning their respective theories as to the nature of lightning (see these abstracts, *E.W. & W.E.*, October, 1926, p. 638).

R114.—Atmospheric Electricity and Allied Phenomena. (*Nature*, 2nd October, 1926, p. 493.)

Announcement of a communication from Profs. H. Benndorf and V. Hess, who are writing a comprehensive treatise on the above subject to be published next year, asking physicists and meteorologists in English-speaking countries to send them reprints of their publications. Papers are required on atmospheric electricity dealing with the electric field of the earth and atmosphere, atmospheric ionisation, electricity of thunderstorms, electric properties of rain and snow, radio-activity of the earth and atmosphere, the aurora, theories of the origin of electro-atmospheric phenomena, and propagation of electric waves round the earth. Any reprints on these subjects would be gratefully received by Prof. Benndorf or Prof. Hess, Physikalisches Institut, Universität, Graz (Steiermark), Austria.

R132.—An Examination of the Properties of Audio-Frequency Amplifiers by Means of the Duddell Oscillograph.—W. Baggally. (*E.W. & W.E.*, 3, 37, October, 1926, pp. 628-632.)

R133.—Ein neuer Grundsatz für die Erzeugung von Schwingungen mit Elektronenröhren (A new principle for the production of oscillations with valves).—F. Kiebitz. (*Elektrische Nachrichten-Technik*, 3, 8, August, 1926, pp. 284-289; *Zeitschrift fur Hochfrequenz.*, 27, 6, July, 1926, pp. 163-167.)

The falling I_a—E_{ga} characteristic of the ordinary commercial valve gives the grid-anode system the properties of a negative resistance, which is able to maintain oscillations when arranged parallel to the condenser of an oscillatory circuit. Experiments with such a circuit-arrangement are described when all oscillations ranging in period from 5 sec.—10^{-8} sec. were successfully produced.

R134 & R149.—Notes on Wireless Matters. L. Turner. (*Electrician*, 10th September, 1926, pp. 288-289.)

A brief review of the actions in the rectifier of a wireless receiver and the relations subsisting between the several types of rectifier.

R138.—Secondary Emission from Metals due to Bombardment of High-speed Positive Ions.—W. Jackson. (*Physical Review*, 28, September, 1926, pp. 524-530.)

The emission from various metals is measured using different kinds and speeds of positive ions and following a method the results of which are unequivocal. Attempt is made to separate electron emission from the phenomenon of positive ion reflection.

R138.—Thermionic and Adsorption Characteristics of Caesium on Tungsten and Oxidized Tungsten.—J. Becker. (*Physica Review*, 28, August, 1926, pp. 341-361.)

R138.—Variation with Temperature of the Work Function of Oxide-Coated Platinum.—M. Glass. (*Physical Review*, 28, September, 1926, pp. 521-523.)

A series of tests were made with standard Western Electric VT2 valves, in which the filament was held at a higher temperature for a period of five minutes and then returned to a lower reading temperature (950°C.) and the electron current measured with a plate potential of 110 volts. It was found that the previous heating of the filament caused a temporary increase in the electron current over the normal value for that temperature, and that this effect increased with temperature up to about 1130° C., after which point it began to fall off. The results of another series of tests indicate that positive ion emission from the filament begins at a temperature somewhat above that which produced maximum electron current. These results are in agreement with the theory that the thermionic activity of oxide-coated platinum filaments is probably due to a film of metallic barium and strontium produced by reduction of the oxides.

Digitized by Google

R138.—SCATTERING OF ELECTRONS IN IONISED GASES.—F. Penning. (*Nature*, 28th August, 1926, p. 301.)

A letter referring to Langmuir's paper in the *Physical Review* of November, 1925, where it is stated that in investigations with a tube containing electrons with abnormally high velocities, no oscillations could be found. The writer has made experiments with a tube similar to the one used by Langmuir, however, and has detected oscillations when the velocities became abnormal. With appropriate values of emission, anode voltage and pressure, these oscillations could be brought on a Lecher system, the wavelength varying from about 40 cm. to 100 cm. From his results, which are summarised here, the writer concludes that it is not impossible that the observed "scattering of primary electrons" is always accompanied and caused by these oscillations.

R142.3.—DER EINFLUSS DER DÄMPFUNGEN AUF DIE FREQUENZEN ZWEIER GEKOPPELTEN KREISE. (Influence of damping on the frequencies of two coupled circuits).—B. van der Pol, Jr. (*Zeitschrift für Hochfrequenz.*, 28, 1, pp. 12-15.)

A mathematical discussion with a graphical representation of the results.

R149.—SUR LES CONTACTS RECTIFIANTS.—H. Pélabon. (*Comptes Rendus*, 183, 6th September, 1926, pp. 491-492.)

The detection of electro-magnetic waves can be effected by a system, metal-dielectric-metal, in which the minimum thickness of the dielectric (generally air) is maintained practically constant by the intercalation of insulating granules (*L'Onde Electrique*, 52, p. 411, these abstracts, June, 1926, p. 386). This article deals chiefly with the practical means of making such detectors. Various methods of depositing the intercalating powder on the surface of one of the metals are mentioned and also ways for increasing the electric resistance of one of them, shown to be generally an advantage.

R161 & 162.—THE AMPLIFICATION AND SELECTIVITY OF A NEUTRALISED TUNED ANODE CIRCUIT.—N. McLachlan. (*E.W. & W.E.*, 3, 36, September, 1926, pp. 545-552.)

R200.—MEASUREMENTS AND STANDARDS.

R213.—CALIBRATION OF ULTRA SHORT WAVELENGTHS.—F. Aughtie. (*E.W. & W.E.*, 3, 37, October, 1926, pp. 633-634.)

R251.—A VERY SENSITIVE VALVE GALVANOMETER.—Prof. G. W. O. Howe. (*E.W. & W.E.*, 3, 37, October, 1926, p. 634.)

R261.—THE THERMIONIC VOLTMETER.—W. Medlam and U. A. Oschwald. (*E.W. & W.E.*, 3, 37, October, 1926, pp. 589-598.)

A first instalment of a paper giving the results of an experimental investigation of the performance of five different types of thermionic voltmeter from the points of view of sensibility and range, possible frequency error, wave form error, input load, and stability of calibration.

R281.—DIELECTRIC ABSORPTION AND THEORIES OF DIELECTRIC BEHAVIOUR (Whitehead), and THEORY OF ABSORPTION IN SOLID DIELECTRICS (Karapetoff). (*Amer. Inst. Elect. Eng. Journ.*, 45, 9, September, 1926, pp. 888-894.)

The discussion on these papers, which were published in this Journal of June, 1926, p. 515, and of March, 1926, p. 236, respectively.

R281.—THE MECHANISM OF BREAKDOWN OF DIELECTRICS.—P. Hoover. (*Amer. Inst. Elect. Eng. Journ.*, 45, 9, September, 1926, pp. 824-831.)

A critical study of existing theories in an attempt to obtain a working hypothesis that more nearly meets the stringent requirements of experimental facts. In a dielectric there is kinetic equilibrium between the ions and the molecules, and breakdown will occur when that equilibrium is disturbed, regardless of whether the disturbance is due to mechanical strain, electrical strain, or to thermal effects. The three-fold nature of the phenomenon must be considered in a complete analysis of the problem, which it is thought has not been sufficiently realised in the past.

R300.—APPARATUS AND EQUIPMENT.

R321.—DER BAU DER BERGANTENNE AM HERZOGSTAND.—O. Scheller. (*Elektrische Nachrichten-Technik*, 3, 7, pp. 241-255.)

Detailed description of the construction of this unique aerial of a new German high-power station for communication with the Far East. Economy is practised by doing without masts altogether and suspending the aerial between two mountain peaks, as shown below :—

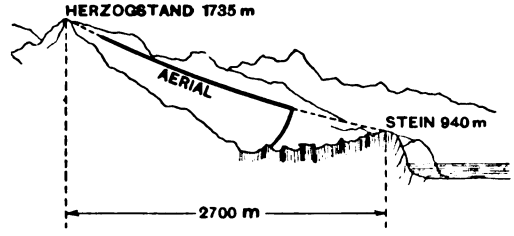

Several illustrations of constructional features are shown including the earthing arrangement.

R330.—THE LIFE-TESTING OF SMALL THERMIONIC VALVES.—M. Thompson, R. Dudderidge and L. Sims. (*Inst. Elec. Eng. Journ.*, 64, September, 1926, pp. 967-985.)

A paper discussing the basis of a life specification for thermionic valves and describing their general characteristics in relation to the problems

Digitized by Google

involved. Solutions of these problems are considered and a large installation for testing the life of valves is described. Typical examples of the results obtained are given.

R343.—On the Amplification of Ultra Short Waves by the Thermionic Valve.—H. Ando. (*Journ. Inst. Elect. Eng., Japan*, August, 1926, pp. 899-907.)

If we try to amplify ultra short waves of 50 metres or less with a valve amplifier, the inter-electrode capacity will become important, and the valve tend to oscillate, accompanied by a diminution of the amplification per stage, consequently until recently direct amplification of ultra short waves was considered impossible or impracticable. The author has been engaged on research of a valve high frequency amplifier, particularly of the tuned type, for some years, and devised the method of preventing inter-electrode capacity coupling employed extensively in broadcast receiving apparatus. He has now developed his earlier idea, a first account of which is given in this article. The new method is said to have proved superior to the simple so-called neutrodyne system in the 100-300 metre band and much more effective in the ultra short wave regions. Circuit diagrams are shown, the description of which, however, is in Japanese.

R343.—The Infradyne.—H. Green. (*Radio News*, October, 1926, pp. 356-357.)

Description of a circuit differing from the superheterodyne in that instead of making use of the difference in frequency between the local oscillator and the incoming signal and amplifying this beat, the sum-frequency is utilised. Amplification is thus carried out on the very short wave of 95 metres, instead of between 3,000 and 10,000 as in the superheterodyne. In addition to the total absence of interference from long-wave transmitting stations the advantage is claimed of the complete elimination of harmonics which are so prevalent in superheterodyne receivers.

R343.8.—Neutrodynes.—S. Lwoff. (*Radio Revue*, 5, pp. 137-147, September, 1926; pp. 169-179, October, 1926.)

The first two parts of a well-illustrated article on neutrodyne theory and practice.

R344.9.—Piezoelectrische Resonanzerscheinungen (Piezo-electric resonance phenomena).—A. Scheibe. (*Zeitschrift für Hochfrequenz.*, 28, 1, pp. 15-26.)

A survey of the subject arranged in the following five sections:—

I. Piezo-electricity, comprising the following subsections: history of the piezo effect, piezo-electric crystals, demonstration and theory of the effect, piezo-electric properties of quartz and Rochelle salt.

II. The piezo-electric resonator, comprising the subsections: Langerin's resonator, experimental basis of quartz resonators, establishing resonance, absorption method—normal frequency, rendering the high-frequency longitudinal oscillations of piezo-electric plates visible.

III. The employment of quartz resonators as frequency standards—steel resonators—constancy.

IV. Piezo-electric stabilisors and oscillators.

V. Piezo-electric oscillographs.

Literature consulted.

R376.—On the Condenser-Telephone.—G. Green. (*Philosophical Magazine*, 2, pp. 497-508, September, 1926.)

A preliminary discussion of the mathematical theory of the condenser-telephone when used either as a receiver or transmitter. It is concluded that the instrument has that most important quality of reproducing the vibrations delivered to it uniformly and equally over a very great range of frequency, which has been amply demonstrated by the experiments in progress. Further, condenser telephones of low capacity show decided resonance effects and may be used in bridge-measurements or in heterodyne reception of continuous waves.

R376.3.—Loud-Speaker Efficiency.—C. Balbi. (*Wireless World*, 19, pp. 277-279, 25th August, 1926.)

A brief classification of the sources of energy loss in a loud-speaker, and their relative importance.

R382.—On the Design of an Inductance Coil for Audio-Frequencies which has the Iron Core with the Air Gap.—H. Nukiyama and K. Nagai. (*Journ. Inst. Elec. Eng., Japan*, July, 1926, pp. 734-741.)

It is usual in practice for inductance elements for audio frequencies to employ iron-cored inductances which have an air gap in order to avoid bulky dimensions and to make the ratios of effective resistances to their reactances as small as possible. In this paper the length of the air gap is obtained theoretically by the help of complex permeability, and some relations for the design of the iron-cored inductance are derived taking the leakage into account.

R385.—The Keying of Valve Transmitters.—W. Ditcham. (*E.W. & W.E.*, 3, 36, pp. 526-531, September, 1926.)

R386.—Design of Wave Filter for Absorption of Irregularities of Direct Current Pressure Wave and Application of Aluminium Cell Condenser.—T. Ishiyama. (*Journ. Inst. Elect. Eng., Japan*, August, 1926, pp. 908-935.)

R388.—A Method of Obtaining the Braun Tube Figures in Rectangular Co-ordinates.—I. Yamamoto and K. Morita. (*Journ. Inst. Elect. Eng., Japan*, August, 1926, pp. 945-959.)

R400.—SYSTEMS OF WORKING.

R420.—On the Wireless Beams of Short Electric Waves (III.).—S. Uda. (*Journ. Inst. Elect. Eng., Japan*, July, 1926, pp. 712-724.)

Further experiments in directional transmission on a wavelength of 4.4 metres are described.

Digitized by Google

According to the author's experience a parabolic reflector is not necessary; a reflector consisting of vertical metal rods arranged along a polygonal base line drawn on the ground is equally effective. The rods were spaced 1.1 m. apart and tuned to a half wavelength. When 19 reflector rods were used and the aperture of the reflector nearly equalled 2.7 wavelength, the radiated power was confined almost to an angle of 30°. The paper also gives various types of directive antennæ, for all of which the field measurements were carried out.

R440.—THE REMOTE CONTROL OF BROADCAST RECEIVERS.—P. Hole. (*Electrical Review*, 99, pp. 339-340, 27th August, 1926.)

The article is discussed by F. Duffield in the issue of 3rd September, p. 402, to which P. Hole replies in the issue of 10th September, p. 443.

R487.—DER NEUE DREHSPULEN-SCHNELLSCHREIBER VON SIEMENS AND HALSKE. (New rotating coil high-speed printer by Siemens and Halske.) — A. Jipp. (*Zeitschrift für Hochfrequenz.*, 27, 6, pp. 175-177.

Description of a new telegraph receiver for which the highest speed yet reached is claimed, also the ability to distinguish between signal and disturbance currents.

Illustrations and specimen records are shown.

R500.—APPLICATIONS AND USES.

R536.—WIRELESS NEWS. (*Electrician*, 97, p. 370, 24th September, 1926.)

Mention is made of recent experiments in the Limburg coal mines when intelligible signals were sent and received by wireless telegraphy through the earth. The wavelengths employed varied from 30 to 50 metres, and it was found that communication was more satisfactory in a lateral than in a perpendicular direction.

R570.—TELEARCHICS.—A. Castellain. (*Wireless World*, 19, pp. 255-262, 25th August, 1926.)

The first of a series of articles dealing with the subject of distant control from both the theoretical and practical point of view.

R580.—WIRELESS AND THE GRAMOPHONE.—A. Dinsdale. (*Wireless World*, 19, pp. 399-405, 15th September, 1926.)

An account of the application of electrical methods to gramophone recording and reproduction.

R582.—PICTURE TELEGRAPHY AS A METHOD OF INVESTIGATING THE PROPAGATION OF SHORT WAVES.—H. Rukop. (*Elektrische Nachrichten-Technik*, 3, 8, pp. 316-318.)

See Abstract under R113.

R592.2.—OVERSEAS RADIO SERVICES.—C. Crawley. (*Wireless World*, 19, pp. 305-310, 1st September, 1926.)

Notes on British stations engaged on imperial and foreign communication.

R600.—STATIONS: DESIGN, OPERATION AND MANAGEMENT.

R616.5.—RADIO-WIEN.—G. W. O. Howe. (*E.W.& W.E.*, 3, 36, pp. 533-543, September, 1926.)

Description of the new high-power Vienna broadcasting station.

R800.—NON-RADIO SUBJECTS.

R000.—THE B.E.S.A. GLOSSARY.—C. L. Fortescue. (*Electrical Review*, 99, p. 523, 24th September, 1926.)

A discussion of the points at issue between Prof. Howe and the B.E.S.A. Panels, showing that Prof. Howe's sweeping criticisms may not be as fully justified as might at first sight appear.

Esperanto Section.

Abstracts of the Technical Articles in our last Issue.

Esperanto-Sekcio.

Resumoj de la Teknikaj Artikoloj en nia lasta Numero.

R000.—SENFADENO ĜENERALE.

R050.—RESUMOJ KAJ ALUDOJ.

Kompilita de la *Radio Research Board* (Radio-Esplorada Komitato), kaj publikigita laŭ aranĝo kun la Brita Registara Fako de Scienca kaj Industria Esplorado.

R064.—LA NACIA RADIO-EKSPOZICIO.

Revuo pri la konstrueroj kaj akcesoraoj montritaj ĉe la lastatempa Nacia Radio-Ekspozicio ĉe Olympia, Londono. La temoj pritraktitaj estas Novaj Valvoj, Plenondaj Gas-Disŝarĝaj Rektifikatoroj, Alternkurentaj Bateriaj Elimiloj, Havigo de Filamenta Provizo el Alterna Kurento, Kontinukurentaj Potencialaj Dividiloj, Supersonaj Heterodinaj Desegnoj, Alt-tensiaj Akumulatoroj, Laŭtparoliloj, Simplaj Provaj Ekipajoj, kaj Diversaj Ĝeneralaj Desegnoj. En la sekcio pri Novaj Valvoj, oni donas utilajn informojn pri la konstantoj de la novaj tipoj. La artikolo estas bone ilustrita per fotografajoj de multaj el la partoj kaj akcesorajoj priskribitaj en la teksto.

Digitized by Google

R100.—ĜENERALAJ PRINCIPOJ KAJ TEORIO.

R132.—Ekzameno de la Proprecoj de Aŭdfrekvencaj Amplifikatoroj pere de la Duddell'a Oscilografo.—W. Baggally.

La aŭtoro priskribas eksperimentojn pri la speco kaj grandeco de ondforma distordo produktita de aŭdfrekvencaj transformatore-kuplitaj amplifikatoroj. Unue oni mallonge priskribas la Duddell'an Oscilografon uzitan por la eksperimentoj. La mezuroj estis faritaj je 480 cikloj, kaj estis desegnitaj por liveri informon pri (1) Indiko pri la speco kaj grandeco de ondforma distordo produktita de la amplifikatoro sub laboraj kondiĉoj, (2) La tuta volta amplifo obtenita per difinitaj elmetaj kondiĉoj, (3) La pinta tensio, ĉe la unua krado, kaj la maksimuma permesita tensio konforme al foresto de troŝarĝo kaj rezulta distordo, (4) La plej bonaj funkciaj alĝustigoj por la amplifikatoro. Oscilogramoj obtenitaj sub diversaj kondiĉoj estas reproduktitaj kaj ĝeneralaj konkludoj tiritaj el la eksperimentaj rezultoj.

R200.—MEZUROJ KAJ NORMOJ.

R213.—Normigo de Mallongegaj Ondolongoj. —F. Aughtie.

Se ondometro kun skalo de 100-200 metroj estas uzita por la normigo per harmonikoj de ege mallonga ondo, ekzemple, 5- aŭ 6-metra, oni renkontas malfacilecon eltrovi la ĝustan valoron de la harmoniko efektive koncernita. En la nuna artikolo, tabula metodo estas priskribita, per kio tiu-ĉi harmoniko estas facile trovita, kaj la mallonga ondlongo decidita kun multa precizeco.

R251.—Tre Sentema Valva Galvanometro.—Prof. G. W. O. Howe.

Priskribo, kun skizo, estas donita de aranĝo de kvar-elektroda valvo kiel valva galvanometro. Rezistanca retro-kuplo estas uzita, posedanta la ekvivalentan efikon pligrandigi la krutecon de la valva karakterizo ĝis dekoble de ĝia originala valoro.

R261.—Termiona Voltmetro.—W. B. Medlam & U. A. Oschwald.

La artikolo pritraktas la ĝeneralan funkciadon de valvaj voltmetroj, kaj diskutas ilian agadon laŭ la vidpunktoj de (*a*) Sentemeco kaj skalo, (*b*) Ebla frekvenca eraro, (*c*) Ondforma Eraro, (*d*) Enmeta Ŝarĝo, (*e*) Stabileco de Normigo. En la nuna parto, la tipoj traktitaj estas de la modelo "Moullin," uzantaj anodkurvan kaj amasigitan kradan rektifadon respektive. La diversaj rubrikoj estas bone ilustritaj per eksperimentaj rezultoj. Oni montras, ke la eraroj ondformaj estas pligrandaj ĉe la plilasta tipo, kiel ankaŭ potencperdoj. La artikolo estas daŭrigota.

R290.—Metodo Normigi Mikrofonojn Kaj Laŭtparolilojn.—H. J. Round.

Metodo estas priskribita por normigi mikrofonon. Produktilo de muzika tono funkcias tra sendistorda amplifikatoro sur metalan blokon funkciigantan la mikrofonon kaj ĝian asociitan amplifikatoron. Glitaj voltmetroj provizas por la determino de mikrofona enmeto kaj elmeto. Diagramo de la aparato estas presita, kun priskribo de la muziktona produktilo kaj amplifikatoro. Tio-ĉi uzas du radio-frekvencajn oscilatorojn por produkti heterodinajn batojn de la bezonita aŭdebla frekvenco.

R300.—APARATO KAJ EKIPAĴO.

R355.51.—Alt-Tensia Rektifikatoro Por Malalt-Potenca Sendilo.—T. S. Skeet.

Priskribo de transformatoro kaj sinkrona rektifikatoro (kun komutaj kaj glatigaj aranĝoj), funkcianta per provizo de 200 voltoj, 50 cikloj Alterna Kurento, kaj liveranta glatan Kontinukurenton je ĉirkaŭ 620 voltoj kaj ĝis 60 miliampermetroj, por malaltpotenca sendilo. Cirkvita diagramo kaj fotografaj ilustraĵoj estas donitaj, kaj la eksperimenta disvolviĝo de la aparato priskribita por la bono de aliaj konstruistoj.

R400.—APLIKOJ KAJ UZOJ.

R401.—Lastatempaj Progresoj Je Mallongonda Senfadena Telegrafio.—H. Rukop. Traduko el la *Telefunken Zeitung* de Januaro 1926a.

En la nuna parto la aŭtoro unue diskutas la antŭan historion de long-distanca interkomunikado, kaj montras ke la optimuma ondlongo, por, ekzemple, Transatlantika funkciado, estis kalkulita kaj eksperimente trovita esti 10,000—20,000 metroj. Li tiam diskutas la neatenditajn distancojn, kiujn oni trovis eblaj per mallongaj ondoj, kaj montras la ekziston de plua optimumo ĉe la mallongonda aro. Eksperimentoj pri la temo estas mallonge priskribitaj. Li poste diskutas kaj ilustras la distribuon de riceva intenseco ĉirkaŭ mallongonda sendilo, kaj transpasas al la funkcio de la ionizita tavolo kaj la diversaj teorioj pri ĝia funkciado, kiuj estas sugestitaj. La klarigo nun plejparte akceptita kiel ĝusta, estas, ke kurbigo de la radioj okazas, kaj ke ĉi tiu kurbiĝo estas efektivigita pro tio, ke la efektiva dielektrika konstanto estas malgrandigita ĉe la supraj tavoloj per kondukiveco, kaj la rapideco de propagado konsekvence pligrandigita. La artikolo estas daŭrigota.

R431.—Noto Pri Sistemo de Atmosferajaj Eliminoj.—S. Butterworth.

La aŭtoro pritraktas pri lastatempa patenta specifiko de M. L. Levy, priskribanta cirkviton por elimini atmosferajojn aŭ alian similan ŝokan ekscitigon. La cirkvito estas unu, ĉe kiu la aŭtoro jam antaŭe eksperimentis, kaj kiu, laŭ opinio lia, ne kapablas je tia elimino. La funkcio de la cirkvito estas diskutita kaj esprimoj derivitaj, laŭ kiuj oni montras, ke la sistemo pligrandigas anstataŭ malgrandigi la relativan gravecon de atmosferaj perturboj.

R800.—NE-RADIAJ TEMOJ.

R510.—Matematiko Por Senfadenaj Komencantoj.—F. M. Colebrook.

La nuna parto pritraktas Logaritmojn. La temo estas dividita laŭ la rubrikoj, (A) Antaŭa Noto pri Funkcioj kaj ilia Grafika Reprezentado, (B) La Elmontra Funkcio, (C) Logaritmoj. Naturaj kaj Ordinaraj Logaritmoj estas pritraktitaj. kun ekzemploj.

Digitized by Google

Correspondence.

Letters of interest to experimenters are always welcome. In publishing such communications the Editors do not necessarily endorse any technical or general statements which they may contain.

The Properties of Audio-Frequency Amplifiers.

To the Editor, E.W.& W.E.

SIR,—As one who has from time to time experimented with L.F. transformers, more particularly in reflex sets, I found Mr. Baggally's article entitled "An Examination of the Properties of Audio-Frequency Amplifiers by means of the Duddell Oscillograph," in the October number of *E.W.& W.E.*, very interesting.

One is immediately struck by the small overall voltage amplification obtained and I cannot help thinking that a very serious degree of reverse reaction must be present. In support of this I would mention that I have found a demonstrable degree of interaction between two transformers of the make used by Mr. Baggally at separation distances up to 4 ft. 6 in. if their core plates are in the same or parallel planes. I also found that by tipping them, after the fashion of the H.F. transformers in a Neutrodyne set, it was possible to bring them so close together as to be almost touching without appreciable interaction occurring. This method of mounting is not, however, generally convenient and I now always have at least one of a pair of transformers iron shrouded.

As a contributory cause of the oscillation experienced under certain conditions, I would suggest that an appreciable amount of capacity reaction might be obtained between the oil-immersed elements of the Duddell Oscillograph since no earths or "anchor points" are shown in the diagrams.

The spurious oscillation apparent in Oscillogram 6 is extremely interesting as it shows the type of voltage wave applied to the grid of a valve in a reflex set. Such a wave is inherently asymmetrical as in this oscillogram. The fact that, in the case of this amplifier, the modulations in H.F. wave are in step with the L.F. wave, indicates that an interference is taking place between the two waves, due to varying slope in that part of the characteristic of one or more valves within the set traversed by them. In a reflex set such interference will produce distortion and under certain conditions a characteristic howl (of which more anon).

Wimbledon. D. KINGSBURY.

Plate-current, Plate-voltage Characteristics.

To the Editor, E.W.& W.E.

SIR,—Your correspondent, Mr. I. A. J. Duff, in pointing out the erroneous reasoning in Mr. E. Green's article in your August issue, entitled as above, himself falls into error in the statements :—

1. ". . . the greater the voltage across the primary the greater the overall amplification. The greater the primary impedance the greater the fraction of μ that is utilised"; and

2. ". . . . the main law holds good that the transformer should be of the utmost possible impedance and not of equal impedance with the valve as it would have to be for maximum power amplification."

The notion that transformer primary impedance should be equal to that of the valve is *not* an error, and should therefore not be "laid to rest." When a valve is utilised with an anode pure resistance choke or tuned circuit and the potential for operating the next valve is taken, via a condenser, from the anode itself, then it is true that the greater the anode impedance, the greater is the fraction of μ that is utilised. In this case μ, the voltage amplification factor of the valve, is a measure of the ideally obtainable step-up.

When, however, the primary of a transformer constitutes the anode impedance, whether that transformer be an unloaded (nearly) intervalve transformer, a loaded telephone (loud-speaker) transformer, or a loud speaker itself (considered as a transformer), then it is true in a general way that for maximum activity in the primary its impedance should be equal to that (*i.e.*, to the anode A.C. resistance) of the valve.

We say "in a general way" because such a law is meaningless in the exact sense unless the exact manner is specified in which each variable upon which it depends is made to vary,

We use the word "activity" as a name for the quantity measured by volts × amperes, just as power is a name for the quantity measured by watts. "Activity" embraces its particular case of power.

It is not possible in a letter fully to explain this matter—an article on the subject would be necessary. However, when the laws of variation are such, for instance, that the effective resistance R of the winding, the inductance L, and therefore also the reactance X at a given frequency, vary proportionally, as the fineness of the winding is increased, not only do we get the maximum power, viz.: I^2R watts, when the winding impedance is equal to that of the valve, but also maximum "activity," viz.: $I^2\sqrt{R^2+X^2}$ volt-amperes, and therefore also maximum $I^2\times$ effect (wattless volt-amperes). And in this case it is $\mu\times m$, the mutual conductance, and not μ alone that is a measure of the ideal activity amplification.

Though strict proportionality of reactance to resistance would, at any rate if iron is present, never obtain, it does so sufficiently nearly to serve as a basis upon which to build up an approximate law, such as the one in question. It is a fair approximation, not incorrect in principle. Further, it is nearly correct with windings of various degrees of fineness in a given winding space that either quantity, resistance or reactance at a given frequency, is proportional to the square of the

Digitized by Google

number of turns. Hence the I^2X or wattless volt-ampere effect is proportional to the square of the magnetising ampere-turns. At once it follows that the maximum alternating core-flux and therefore the maximum voltage of a given secondary occurs when the impedance of the primary is equal to that of the valve.

There are various reasons, which cannot be gone into here, why the particular frequency for which the primary impedance of an audio intervalve transformer should be made equal to that of the valve, should be one quite low in the audio scale, after which the primary should be tuned to a low audio-frequency by the addition of a small parallel condenser, as is done in one of the latest and best transformers to be placed on the market; but it is an error of principle to say that because we want volt-amplification, the *primary* of the transformer of the valve-transformer combination must be of the highest possible impedance.

Derby. E. FOWLER CLARK, B.Sc., B.A., A.M.I.E.E.

Resistance Amplification.

To the Editor, E.W. & W.E.

SIR,—The curve enclosed relates to an earlier experiment with the circuit shown, considerably better results have since been obtained with another

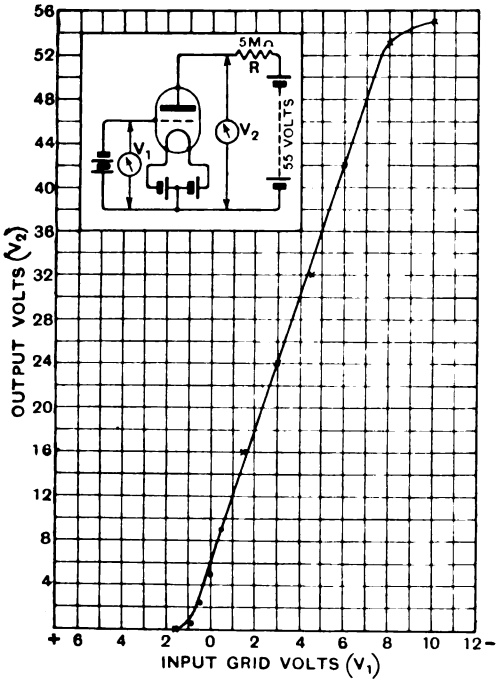

type of valve. The readings denoted by × were taken on an electrostatic voltmeter while those with the circle were taken on a Moullin type voltmeter.

Great care was taken to verify the readings especially those at the extreme ends.

The circuit is by no means a freak one, but it is capable of giving results which compare very favourably indeed with the best type of L.F. transformer.

Your correspondent, Mr. Duff, mentions two instances where the megohm resistances are employed in resistance-coupled amplifiers.

The writer has an L.F. resistance-coupled amplifier with an anode resistance of 5 megohms which has been in daily use since 1923. This resistance is composed of a strip of leatheroid about 0.1 in. broad and 2 in. long, rubbed over with a lead pencil and its surface polished. This strip is inserted in a piece of leatheroid and fitted with brass clamps at either end. The resistance is connected to a 50-volt H.T. supply. The coupling condenser is 0.00002μF. Reaction is not employed owing to the extremely low anode current.

A grid-leak is not used but a suitable (slightly neg.) grid bias is automatically maintained by the grid condenser alone. The valves used at present are a DE3b and a B.T.H. B6, the latter working with 130 volts on plate and the former with 50 volts.

The following particulars give some indication of the strength of reception obtained with the stage at a distance of about 4 miles from local station.

A neon lamp was connected between anode of last valve and the H.T. neg.-terminal. This lamp glowed with a continuous flicker while receiving local broadcast.

This lamp was tested (keeping polarity the same) and found to strike up at 175 volts. Thus the voltage across the 100-volt battery and loud-speaker in series exceeded 175 volts. The battery volts were tested by means of an electrostatic voltmeter.

The fact that the original resistance is still in use speaks well for the permanency of a graphite resistance.

Glasgow. A. ROBERTSON.

Fading.

To the Editor, E.W. & W.E.

SIR,—I think that the statement of Dr. Oliver Hall, that "Fading is an Irregular Phenomenon," is quite correct, at any rate, such has been my experience, covering several years of marine operating in various parts of the world. I am of the opinion that no curves can be plotted, or formulæ deduced, to cover the "mystery" of fading. Certainly not for any great expanse of the globe, as fading in different parts of the earth is no doubt caused by various reasons. Hence, any set of rules or curves which may be applied quite successfully in, say, the British Isles, would be totally inapplicable in any other part of the earth, owing to the great difference in local conditions, governed by weather conditions, temperatures, rarefication of the atmosphere, also due to physical features of the earth such as the presence of conductors, iron ore deposits, etc. In support of the latter statement let me relate, on a voyage up Spencer Gulf in South Australia, in daylight, a strong wind sprang up, increasing to gale force, but with no sign of rain. On touching the earthing switch I received quite a shock, and found that a spark of half an inch in length could be obtained from aerial to

Digitized by Google

earth owing to the former being charged with static electricity. These conditions prevailed for half an hour, then gradually ceased. During this time the signals from Adelaide Radio, VIA, faded out completely, though the distance was only about 20 miles. This "electrical storm" was due, in my opinion, to the presence of vast deposits of iron ore in the locality, both on land and under the sea. In this country the atmosphere is rarefied to a much greater extent than north of the tropics, and to this is due the greater distances over which reception may be had with equivalent apparatus. We are troubled greatly with fading towards the hinterland of Australia particularly on the lower broadcast band, 300 to 400 metres. But as yet I have heard of no fading effects being noticed over the Pacific Ocean, which, I think, goes to prove that the physical features of the land are the cause of many instances of fading, owing to the varying condition of the atmosphere, due to alternate heat and rain. Why is it that often a shower of rain will increase the range and clearness of reception of signals ?

In conclusion, I would say that, were observations made simultaneously in different parts of the world, the data so obtained would go to prove that fading cannot be reckoned with as a regular phenomenon, but will be found to be due to the causes above stated.

A. C. JACKSON
(Senior Operator),
Station 4QG.

Brisbane,
Australia.

The Sodion Tube.

To the Editor, E.W. & W.E.

SIR,—I noticed in the August, 1926, issue of *E.W. & W.E.* a discussion by Mr. G. G. Blake in regard to the "Sodion" tube and Captain Eckersley's reply. I would like to say for Mr. Blake's information that the "Sodion" never made a startling success in this country. The tube was theoretically a wonderful thing, but it failed to measure up in practice. True, it did detect and amplify and did not oscillate but there were faults which I cannot explain here. To Captain Eckersley I would say in reply to his statement that he has "never met a valve which will amplify but not oscillate" that a few years ago the statement was made that a crystal could not be made oscillate.

I also noticed that there was considerable discussion about power supply devices. There has recently been brought out in this country a new filamentless rectifier tube called the "Raytheon." Several of the better manufacturers of transformers and like accessories in this country are making the supplementary parts necessary to assemble a complete "B" battery eliminator. The complete units are excellent—no hum, wide range of voltages obtainable simultaneously, and a high current output.

If any of your readers care to know more about this or any other American radio product, if they will write me I will be very glad to give them any information I can.

WILBUR C. BROWN.

Holtville, Cal.

A Very Sensitive Valve Galvanometer.

To the Editor, E.W. & W.E.

SIR,—With reference to the article on "A Very Sensitive Valve Galvanometer" it can be remarked that the circuit described is not a new one. An exhaustive description of it was given by me nearly two years ago in the Dutch review *Radio Nieuws.** This article also mentions the result of tests in which the slope of the characteristic was increased to 200mA/volt over a range of 0.0001 volt. With an output resistance of only 2,000 ohms an effective voltage amplification of 400 was obtained over that range. The circuit was also employed as an amplifier of alternating currents, for which it was pointed out that capacity and still more inductance must be carefully avoided in order to obtain satisfactory results.

The reader, who wishes to obtain more particulars as to the behaviour of the scheme, can refer to Mr. Turner's article on the Kallirotron, which is an equivalent circuit obtaining single grid valves.†

Rijswijk Z. H.,
Holland.

H. O. ROOSENSTEIN.

* *Radio Nieuws*, February, 1925.
† *Radio Review*, 1, 317, 1920.

Books Received.

"Dictionary of Wireless Technical Terms."

WIRELESS experimenters, students and amateurs will welcome the very serviceable and compact little Dictionary of Wireless Technical Terms which has been compiled by Mr. S. O. Pearson, B.Sc., A.M.I.E.E., and is published by Messrs. Iliffe & Sons, Ltd., for the very modest sum of 2s. net or 2s. 3d. post free.

Nearly everyone, in his reading, comes across terms and expressions of which he does not know the meaning or of which he desires an exact definition, and this volume, which can be carried in the pocket, affords a convenient source of ready reference. Ample definitions are given of all technical terms commonly encountered and highly technical language has been avoided as far as possible. An extended system of cross-references makes it possible for the information to be understood by those possessing the minimum knowledge of wireless theory and practice.

The book, which contains 254 pages, is well illustrated, and, wherever necessary, an explanatory diagram has been added to a definition to enable it to be understood more easily.

Digitized by Google

Amateur Long-Distance Work.

[R545.009.2

EVER since long distance amateur work started, we have been accustomed to hearing about this time every year remarks to the effect that the "real DX season" was about to start. Most of us, however, thought that last autumn was the last occasion on which this annual remark could be made with any degree of truth; that, in fact, the use of wave-lengths of about 40 metres was going practically to abolish the seasonal variations in DX conditions. This opinion has been justified to the extent that touch has been kept up with most of the world right through the year, but the amount of work done during the summer was very small indeed compared with that normally done in the winter, and this is probably not entirely due to the smaller number of stations working in the summer. It seems that conditions are getting decidedly better, and certainly more stations are working now, so we may say, once again, that the "real DX season" is about to start.

Everyone will agree that it is being well started by the "QRP week" organised by the Radio Society of Great Britain. During this (the first week in November) all stations are asked to limit their power to 5 watts input on the 45-metre band during the usual amateur working hours, and to keep an exact log of all working. They are further asked to make sure that the note of their transmissions is "pure D.C." This last rule is intended to prevent unnecessary jamming, but it has a further importance in that differences in reported signal strength will not be due to possible differences in note-readability.

Apart from the limitation of power to 5 watts, the anode voltage used must not exceed 220 volts, but it is difficult to see any justification for this rule. Five watts is a perfectly definite power, and to rule the voltage and current which must comprise it seems a definite bar to research, though from the purely competitive point of view it doubtless makes the tests fairer for those who only have 220 volts available.

Amateurs in all other countries are being asked to co-operate, and so the tests should produce some useful data.

A point which is worthy of mention at the present juncture is the extremely low standard of operating which prevails at present on the amateur waves. At the time of the early work with America, and even later, amateurs took some pride in a good "fist" and good operating procedure. Now, unfortunately, most of the older stations are not working, and those who have taken their places, though good stations technically, are operated in such a way as to make them an absolute nuisance to others, besides greatly prejudicing their chances of obtaining the reports they so often ask for. In view of the present state of affairs we may be forgiven if we repeat the "procedure" of good operating. To call a station, send his call-sign three times, then the "intermediate," then your own call-sign three times, and repeat the whole three times, then go over and listen. Many operators have great difficulty in believing that this is enough, but it is much more likely to get a reply than 40 calls, three intermediates and one signature (a case heard recently from a British station), and it does not occupy the ether so long. If a reply is not obtained the call can be repeated after about 20 seconds listening, and nothing is lost, but if you do get a reply (as is probable) or you find the other station already busy, the rest of a long call is saved as well as the patience of others listening.

When in touch with a station, send each of your words once unless asked to send each twice. It has become much too common to send each twice. Finally, never send faster than you can send accurately. It is not a crime to be a slow operator, but it is a crime to pretend to be a faster one than you are, and some of the operating now heard is quite unreadable. These references to operating are made at the request of a number of amateurs who have noticed the great decline in operating standard during the past year or so.

H. N. R.

Digitized by Google

Some Recent Patents. [R008

The following abstracts are prepared, with the permission of the Controller of H. M. Stationery Office, from Specifications obtainable at the Patent Office, 25, Southampton Buildings, London, W.C.2, price 1/- each.

A NEUTRALISATION SCHEME.

(*Application date, 9th July, 1925, and 20th January, 1926. No. 257,708.*)

A form of neutralised or balanced circuit is described by the Igranic Electric Company, Limited, and P. W. Willans in the above British Patent. The arrangement is somewhat similar to the neutralised circuit which was described in last month's issue of *E.W. & W.E.* Essentially, the invention consists in connecting the primary winding of the neutralising transformer in series with an impedance across a tuned input circuit. Several arrangements are described in the specification one of which is illustrated by the accompanying diagram. A tuned input circuit comprises an inductance L_1 and capacity C_1, which, incidentally is referred to in the specification as an auto-trans-

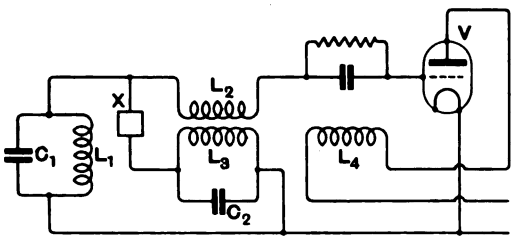

former, having both its primary and secondary windings constituted by one and the same coil. The neutralising transformer consists of an inductance L_2 and an inductance L_3 tuned by a condenser C_2. The winding L_2 is connected between the grid of the valve V and the top end of the inductance L_1, the other winding of the transformer L_3, tuned by the condenser C_2, being connected between the filament and the top end of the inductance L_1 through an impedance X, the nature of which is not mentioned in the specification. A reaction coil L_4, included in the anode circuit, is shown coupled to the inductance L_2. It is stated that the system neutralises either the inductative or capacitative coupling.

ATMOSPHERIC ELIMINATION.

(*Convention date (Germany), 23rd May, 1925. No. 252,409.*)

A rather ingenious system of atmospheric elimination utilising the principle of the Kerr cell is described in the above British Patent by Telefunken Gesellschaft für Drahtlose Telegraphie. The system consists in connecting the receiving aerial to two slightly detuned circuits, the effects of which balance out when both tuned circuits are shock excited, but do not balance out when they are differentially affected by an incoming signal. The accompanying illustration should make the invention quite clear. Here it will be seen that the aerial circuit comprises an aerial, an earth connection and two inductances L_1 and L_2, the whole being tuned by a condenser C. Potentials set up across the inductance L_1 and L_2 are transferred by inductances L_3 and L_4 through lines X and Y, to two tuned circuits L_5 C_2 and L_6 C_3, the two circuits being tuned one slightly above and the other slightly below the desired frequency of reception. These two tuned circuits are connected to rectifying valves V_1 and V_2, the anode circuits of which are shown to contain inductances

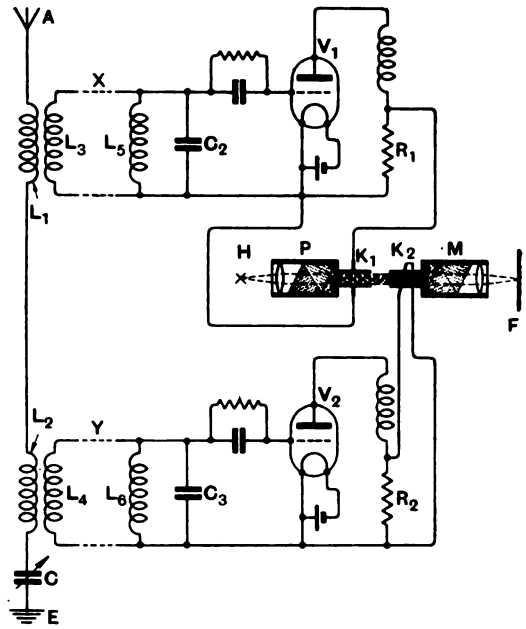

and resistances, the rectified low frequency potentials being taken across two resistances R_1 and R_2 respectively. The potentials across the resistance R_1 are connected to the two plates of the Kerr cell condenser K_1, while those across the resistance R_2 are taken to the two plates of the second cell K_2. The two cells K_1 and K_2 are arranged so that the planes of the condenser plates are at right angles. A source of light H is directed by a lens and polarising prisms P, the polarised light passing longitudinally through the nitrobenzine or similar dielectric in the first cell K_1. The light then passes through the dielectric of the second cell K_2, and is finally taken through an analyser M, where the light impinges upon a moving sensitised film F. The arrangement functions in the following manner: If the aerial

Digitized by Google

system is affected by an atmospheric discharge the two tuned circuits L_5 C_2 and L_6 C_3 are shock excited at their natural frequency, substantially equal voltages being produced between the grids and filaments of the two valves V_1 and V_2. These voltages are amplified and passed on to the two cells K_1 and K_2. A given voltage across the electrodes of the cell K_1 will rotate the plane of polarisation through a given angle. A similar voltage, however, accompanied by an equal change of the plane of polarisation, will be obtained from the other valve system. However, since the plane of the two plates of the two cells are at right angles, the two shifts will cancel out and no light will pass through the analyser. In other words, the effect of an atmospheric discharge upon the receiving system will not influence the signal recorded at all. However, in the case of received desired signals, unequal voltages will be obtained from the two rectifying valves, and the shift produced by one Kerr cell will not be counteracted by the shift produced by the other cell, with the result that the light falling on the moving film will vary in intensity, thereby faithfully recording the signal.

VOLTAGE REGULATION OF MAINS UNITS.

(*Convention date* (*U.S.A.*), *6th February*, 1925. *No.* 247,213.)

One of the chief troubles which is experienced in the utilisation of valve rectifiers for obtaining anode current supply from the mains lies in the fact that the voltage is apt to change very considerably with the variation of load taken by the receiver. A scheme which overcomes this difficulty is claimed by Marconi's Wireless Telegraph Company and F. H. Kroger in the above British Patent, which should be quite clear by reference to the accompanying illustration. A transformer T provides the high voltage for the two rectifying valves

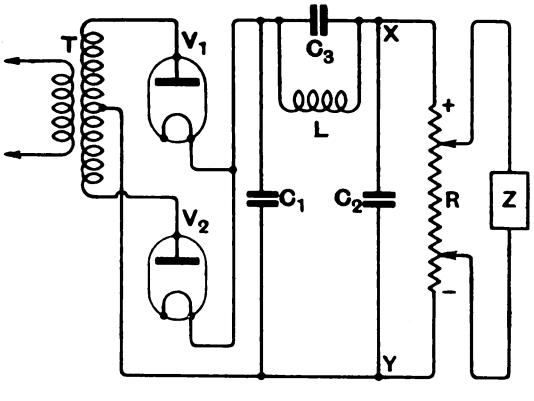

V_1 and V_2, the valves being used for full wave rectification in conjunction with a centre tap on the secondary of the transformer. The output of the rectifier is taken through a form of π filter comprising two condensers C_1 and C_2, on either side of an inductance L shunted by a capacity C_3. Normally, the load, such as the current used by a receiving circuit, is taken across the points X and Y, and is represented diagrammatically as Z. According to the invention, however, a resistance R is connected across the points X and Y, of such a value that the current flowing through it is very considerably greater than the current flowing in the load circuit. This results, of course, in any small variation in the load current making very little difference to the joint impedance of the circuits Z and R. In other words, the voltage across R, or the part which is tapped off in circuit, remains substantially constant.

A PECULIAR AMPLIFIER.

(*Application date*, *21st March*, 1925. *No.* 256,998.)

A very peculiar amplifying circuit consisting of a three-valve arrangement which is claimed to have the amplification of a normal five or six

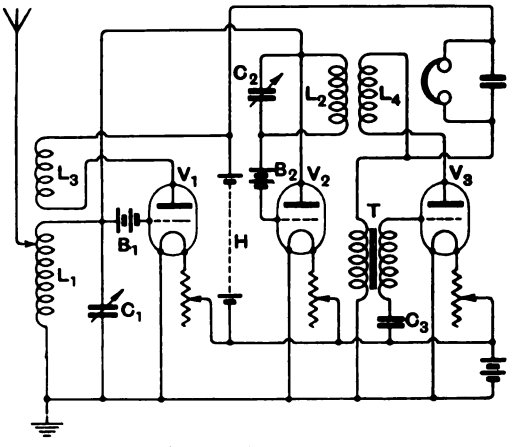

valve receiver is described in the above British Patent by J. Wilcockson and H. W. Roberts. It is stated that various valves acting in a reflex manner amplify both radio and audio frequencies. It will be seen that a tuned circuit L_1 C_1, provided with an aerial and earth, is connected between the grid and filament of the first valve V_1 through a negative bias battery B_1. The anode circuit of the valve contains a reaction coil L_2, coupled to the inductance L_1. Another circuit L_2 C_2 is connected between the upper end of the circuit L_1 C_1 and the grid of the valve V_2, again through a bias battery B_2, the other end of the tuned circuit being connected to the anode. The inductance L_2 is coupled to another inductance L_4, which is in series with the telephones and the anode of the valve V_3. The telephones are also in series with one winding of a transformer T, the other end of which is connected to earth, and the secondary of the transformer is connected between the grid of the last valve and to earth through a condenser C_3. One point which we notice is that the high tension battery H appears to be short-circuited to earth through the telephones and one winding of the transformer T. The specification also stated that low frequency potentials are

Digitized by Google

induced from the inductance L_3 into the aerial tuning coil L_1. We believe, however, that the circuit is similar to that used in the "Retrosonic" receiver. Readers who are interested in the arrangement are referred to the specification, where they will find full details concerning the actual values of the coils and condensers.

STABILISING AMPLIFIERS.

(*Convention date* (*U.S.A.*), *26th July*, 1924. *No.* 237,553.)

A resistance method of stabilising high frequency amplifiers is described in the above British Patent by Atwater Kent Manufacturing Company and A. D. Silva. Resistances have previously been employed for stabilising purposes in multivalve amplifiers by including them in the anode circuit, either in series with the tuned circuit or an impedance, or across the tuned circuit so as to increase the damping, and thereby reduce the voltage variation across the circuit. While stabilising the amplifier this system materially lowers the amplification, and also very considerably decreases the selectivity. According to this invention, however, stabilisation is obtained by the inclusion of resistances in series with the grids and tuned input circuits of the valves. The accompanying illustration should make the invention quite clear. A series of radio frequency transformers (H.F.) are used to couple together the three valves. The secondaries of the transformers comprise inductances L tuned by condensers C and connected between the filaments and the grids through the resistance. The inherent capacity coupling between the anodes and grids is shown dotted at K. Thus it will be obvious that if any capacity effect be transferred from the anode circuit of the valve to the critically tuned input circuit LC the current has to flow through the resistance. The resistances are made of such a value that the transference of voltage is insufficient to cause the valve to generate continuous oscillations. Since the resistances are in series with the grids they do not have any very material effect upon the sharpness of tuning, but, of course, tend to lower the overall amplification.

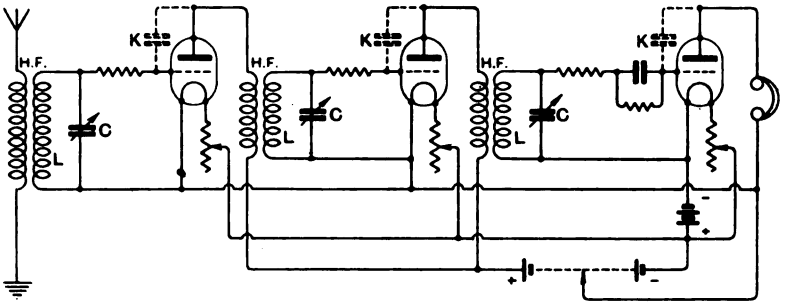

THE ELECTRICAL CONTROL OF LIGHT.

(*Convention date*, *20th June*, 1924. *No.* 235,857.)

The above British Patent, No. 235,857, granted to Dr. A. Karolus, describes a method of electrically controlling a beam of light which can be applied to wireless television or for controlling purposes. The invention really consists in the utilisation of a Kerr cell. The accompanying diagram illustrates the arrangement of the Kerr cell and its associated electrical circuit. The Kerr cell consists essentially of an electrostatic condenser having some liquid or colloidal dielectric through which polarised light is passed. Thus a source of light S impinges upon the polarising arrangement such as a nicol prism device, consisting of a double convex lens L and two prisms P. The electrostatic condenser, comprising the Kerr cell, consists of two plates A and B having a dielectric D, such, for example, as nitrobenzine. A similar prism arrangement P_2 and lens L_2 acts as an analyser concentrating the light upon the screen O. Under the influence of a voltage between the two plates A and B the plane of polarisation of the light is altered thereby causing the beam of light to change in intensity. Since the rotation of the plane of polarisation occurs simultaneously with variation of voltage that is, there is no lag, the device is readily applicable to television purposes.

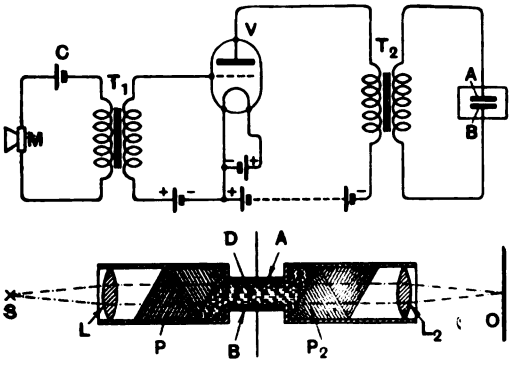

Digitized by Google

The illustration shows one method of controlling the light simply by a varying source of current produced by the microphone M, and a battery C connected through a transformer T_1 to the grid-filament circuit of a valve, the output of which contains another transformer T_2. Voltages produced across the secondary of this transformer are applied directly to the plates A and B of the Kerr cell, thereby controlling the light beam as previously mentioned. The specification gives details of several methods of utilising the system.

ANOTHER STABILISED AMPLIFIER.

(*Application date, 20th October*, 1925. *No.* 257,122.)

Another form of resistance stabilised amplifier is described by L. L. Jones in the above British Patent. Essentially the invention consists in providing a critically tuned input circuit and an untuned anode circuit, the natural frequency of which is higher than the highest frequency to which the tuned circuit is to be tuned, further stabilisation being obtained where required by the inclusion of series resistances. The accompanying diagram, which illustrates one arrangement of the invention, shows five cascaded valves with the sixth valve used as a detector. The aerial consists of a frame L_1, tuned by a capacity C_1, connected between the grid and filament of the first valve. The anode circuit contains an inductance L_2, which is coupled to an inductance L_3 tuned by a condenser C_2. The anode circuit also contains a resistance R_1 which is of the order of 1,000 ohms. The output of this circuit is connected through another inductance L_4 connected to an untuned inductance L_5, connected between the grid and filament of the next valve, another resistance R_2 being connected in series with the anode inductance L_4. The resistance, in this case, is of the order of 3,000 to 5,000 ohms. The successive stages are coupled by inductances L_6, L_7 and L_8, two of which are in series with resistances R_3 and R_4 respectively, again of the order of 3,000 to 5,000 ohms.

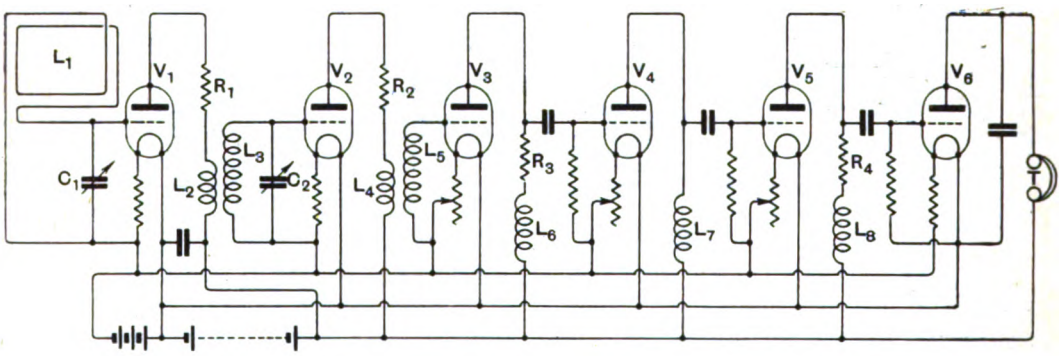

A REFLEX RECEIVER.

(*Application date, 12th May*, 1925. *No.* 256,688.)

The above British Patent, granted to A. G. Benstead and Rotax (Motor Accessories) Limited, described two reflex circuits, one of which is shown in the accompanying illustration. The anode circuit of the first valve contains a high frequency transformer H, the secondary of which is tuned by a condenser C_2, and is connected to the grid circuit of the second valve V_2. The anode circuit of this valve includes a low frequency transformer T, the secondary of which is connected to the grid circuit of the first valve V_1. The anode circuit of the first valve V_1 constitutes a frame aerial F tuned by a variable condenser C_1, the frame aerial F being inductively coupled to an open aerial A. The telephones, of course, are included in the anode circuit of the first valve as shown. A by-pass condenser C_3 is connected across the secondary of the transformer T.

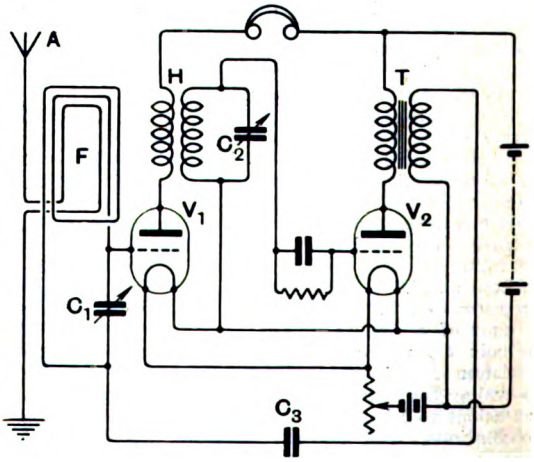

Digitized by Google

EXPERIMENTAL WIRELESS & The WIRELESS ENGINEER

VOL. III. DECEMBER, 1926. No. 39.

Editorial.

The Inauguration of the Canadian Beam Service.

THE past month has been one of great interest and satisfaction to the British radio engineer. For many years we have lived under a cloud, for although it was in England that the first developments of radio took place and although the first signals to bridge the Atlantic were radiated from Cornwall, we seemed to have fallen behind in the large scale applications of this new means of communication. Germany had its Nauen, France its Sainte Assise, the United States their Rocky Point, while we had a succession of commissions and committees. This was the more humiliating because of the obvious applicability of this new means of communication to the special needs of our widely scattered Empire and also because of our previously unchallenged leadership in transoceanic communication due to the pioneer activities of our submarine cable engineers. Whether we have ultimately lost in any way by our policy—or rather by the effects of our lack of policy—is open to question. Development has been so rapid that, had an Imperial chain of stations been erected a few years ago when great pressure to this end was brought to bear on the Government, the stations would now be obsolete or rapidly becoming so.

The position is now entirely changed. With the erection of the Rugby Station we took our place among the countries able to communicate with the farthest points on the earth's surface by means of high-power long waves. Whatever may have been said about the cost of the station—and we have heard it described by a leading foreign radio engineer as the most expensive station ever erected—no one has ever questioned its technical excellence. With the opening on 21st October of the short-wave beam service between this country and Canada, we have taken our place in the very front rank of the nations in the use of radio communication. The new system differs from the old in two respects, viz., in the shortness of the wavelength and in the use of a directed beam.

There has been some discussion as to whether the priority in the discovery of the wonderful ranges obtainable with wavelengths below 100 metres belongs to Senatore Marconi or to those enthusiastic amateur transmitters who were confined to such wavelengths to keep them out of mischief. Whatever views one may hold on this point, one cannot question the claim of the Marconi Company to have developed the beam system to a high stage of technical excellence. The stations have been erected by the Company for the Post Office under guarantees which everyone regarded as extremely stringent. The Canadian service was subjected to tests between 7th and 14th October and, we understand, more than fulfilled the guarantees. In this country the transmitting station is at Bodmin and the receiving station at North

Digitized by Google

Petherton near Bridgwater; in Canada the transmitting station is at Drummondville, 30 miles east of Montreal, and the receiving station at Yamachiche, 25 miles north of Drummondville. The English stations are operated by land line from the G.P.O. in London, whilst the Canadian stations are connected in the same way to the office of the Canadian Marconi Company in Montreal. For the Canadian service it was stipulated that communication at a speed of 500 letters per minute each way (excluding repetitions) should be possible during a daily average of 18 hours. During the seven days' test the average reached was 600 letters per minute, and for many hours it was possible to work at a speed of 1,250 letters per minute in each direction. If this can be maintained and, apart from occasional electrical storms of exceptional severity, we see no reason why it should not, it represents a great increase in our means of transatlantic communication. It is stated that the speed is limited at present by the permissible speed of signalling over the land-line connections at each end and by the mechanical limitations of the present transmitting and recording apparatus.

Improvements in these links in the chain will enable the overall speed to be increased.

It is too early yet to expect very detailed information as to the improvement due to the beam system as compared with non-directed short-wave transmission, but it has been stated that the Canadian signals are about a hundred times as strong due to the use of the beam system. One will await with interest some data on the fading experienced with the Canadian service.

A number of other beam stations are nearing completion, those for South Africa being on the same sites as those for Canada. The stations for India and Australia are being erected on the east coast, viz., at Tetney near Grimsby and at Winthorpe near Skegness. These are all being erected for the Post Office as a part of the Imperial scheme. In addition to this, however, the Marconi Company are erecting a beam station at Dorchester for communicating with North and South America under the terms of a licence permitting them to conduct wireless telegraph services with certain Continental countries and with foreign countries outside Europe.

The most interesting experiment will be the Australian beam service; here the distance is nearly half-way round the globe and the probability of the directional system being superior to the non-directional decreases as one approaches the Antipodes. Our doubts on this point will soon be resolved, however, as we understand that the stations for this service are rapidly approaching completion.

Digitized by Google

A New Method of obtaining Frequency Stabilisation of a Transmitter by means of an Oscillating Quartz Crystal.

By C. W. Goyder (2SZ—2HM). **[R351**

THIS article describes a method developed by the writer of employing the oscillating quartz crystal to obtain a constant frequency at a transmitter, which has considerable advantages over the method of pure high-frequency amplification at present in general use.

The principle involved is that when two high frequency oscillators of nearly the same frequency are coupled together there is a tendency for them to synchronise.* This effect is readily noticeable when an attempt is made to calibrate an oscillating receiver with a heterodyne wavemeter which is placed too close to the receiving set. When the frequency of oscillation of the receiver and wavemeter are approximately equal, this tendency to synchronise causes both oscillations to shift slightly from their original frequency to a position in which the frequency difference is less. If the oscillations are strong they will actually synchronise, giving a frequency in between the two original frequencies, the actual value of which is dependent upon the relative strengths of the two oscillations.

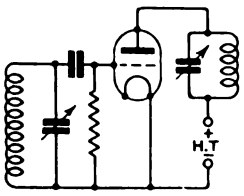

Fig. 1.

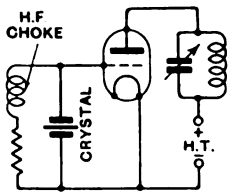

Fig. 2.

In the case of an oscillating receiver close to a broadcasting station it is found that there is quite a large range over which the tuning condenser may be moved without a beat note being produced. Over this range the frequency of oscillation of the receiver is held in step with that of the transmitting station, due to the synchronising effect. In this case the latter frequency is fixed while the receiver frequency is variable.

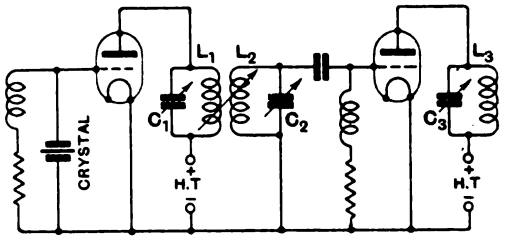

Fig. 3.

In Fig. 1 is shown a circuit of the tuned-plate, tuned-grid type, which is perhaps the best for short wave transmission. Below 200 metres there is no need to couple the coils directly to produce oscillation due to the coupling through the capacity of the valve and further stray coupling. The ordinary circuit for an oscillating quartz crystal is shown in Fig. 2. The frequency of oscillation is fixed by the dimensions of the crystal.

These two circuits are combined in Fig. 3 with variable coupling between L_1 C_1 and L_2 C_2. If now L_2 C_2 is varied so that its frequency passes through that of L_1 C_1, there will be a region over which the frequency of L_2 C_2 is the same as that of L_1 C_1, due to the synchronising effect of the frequency in L_1 C_1 which is superimposed. The effect of limited inductance or capacity variations in the self-excited circuit will not affect its frequency. Over this range the self-excited circuit has all the properties of the crystal oscillator. The reaction of L_2 C_2 on the crystal circuit cannot alter the frequency of oscillation of the crystal.

* For the theory of this effect see the *Proc. Cambridge Phil. Soc.*, Vol. 21, page 231. "The Automatic Synchronisation of Triode Oscillators," by E. V. Appleton.

Digitized by Google

The range over which the two frequencies remain in step will depend upon their relative strengths. In practice the undesired frequency variations occurring in a transmission station are due to variations in the H.T. supply voltage, keying and external variations, such as the swinging of the aerial in the wind. The magnitude of these variations is usually less than ± 1,000 cycles. It is quite simple to obtain synchronism over a range of ± 2,000 cycles or more, thereby allowing a reasonable factor of safety. The undesired frequency variations mentioned above will thereby be prevented, due to the stabilising effect of the oscillating crystal.

The advantages of this method are very apparent in practice. In Fig. 4 is shown a pure high frequency amplifier, such as is generally employed in a crystal controlled transmitter.* In Fig. 5 is shown a practical arrangement of this new method.

Using the old method shown in Fig. 4—

1. There is a tendency for self-oscillation to occur in the amplifying valves unless neutrodyning or some similar complication is introduced.

2. It is difficult to get sufficient H.F. amplification to excite the grids of the amplifying valves to their full extent. This results in a low efficiency and heating of the anode. This is especially troublesome on the short waves where high frequency amplification is always difficult; also where harmonics are amplified to get higher frequencies.

3. There is also the disadvantage that a failure in any part of the amplifying system renders the whole transmitter inoperative.

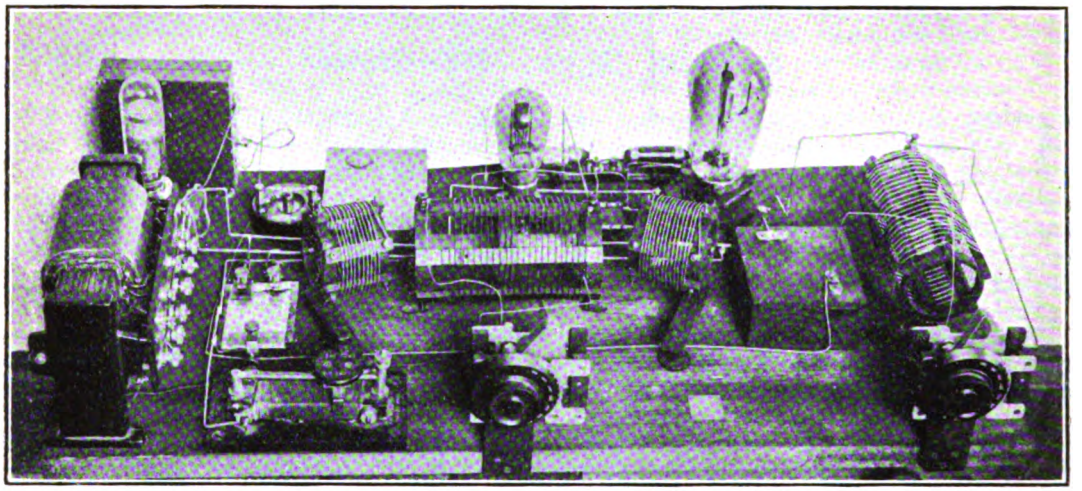

Crystal oscillator and amplifier used for stages A and B of main transmitter, or as a low-power transmitter, with the circuit of Fig. 3. H.T. and L.T. are obtained from the transformer on the left.

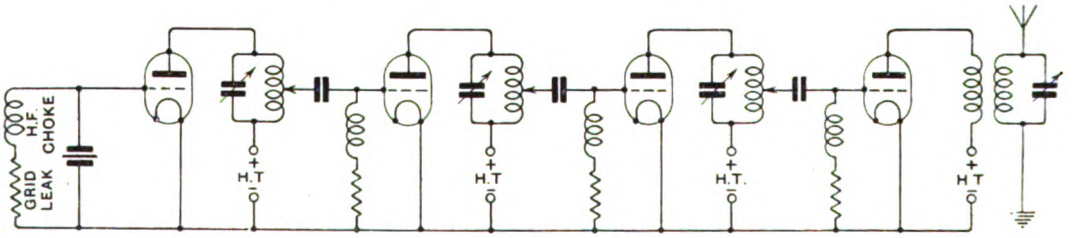

Fig. 4.

* See page 167, *E.W. & W.E.*, March, 1926.

Digitized by Google

Using the new method shown in Fig. 5, the stages are required in the oscillating condition. The difficulties of neutralisation are non-existent. As each stage is a self-excited unit there is no question of under-excitation. The efficiency is, therefore, much higher.

The failure of any part of the crystal or amplifying stages only removes the stabilising effects of crystal control. The final stage will continue functioning as a self-excited transmitter until the stabilising crystal frequency is again superimposed. It is evident that the reliability of this type of transmitter is no less than that of the final self-excited unit.

As all transmitting circuits have a grid circuit to which the crystal controlled unit may be coupled, it is obvious that this method is of a purely additional nature, no changes need be made in the existing transmitter.

The amplification required for a given output from the last stage is greater using the method of Fig. 4 than in the method of Fig. 5. This is partly due to the inefficiency of the former method and also to the difference in principle. In Fig. 5 the frequency of the transmitter is only controlled over a certain limited range. Experimentally, it is found that it is possible to use one stage less amplification and yet control the same output in the last stage.

For the short wavelengths, where it is not possible to use the fundamental of a crystal due to the mechanical difficulties, the amplifiers may be operated on harmonics of the previous stages.

The same advantages are maintained using harmonic operation of the circuits.

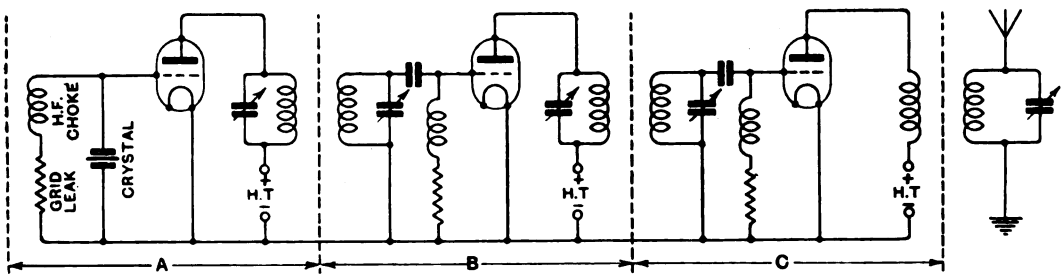

Fig. 5.

Practical Details.

The wavelength for which the transmitter is desired determines whether the fundamental or the harmonic of the crystal is necessary. It is obviously beneficial to use the fundamental where possible, as the amplification required will not be so great as in the case of harmonic operation.

Quartz crystals have been ground to a frequency corresponding to 20 metres but in this case the thickness would be less than 0.2 of a millimetre. This is not a practical proposition. The writer has used crystals operating on their fundamental down to 45 metres. The 45-metre band seems to be the lower limit for fundamental operation. The crystal for this wavelength is between 0.3 and 0.4 millimetre thick, depending on the type of quartz used. Naturally, great care must be taken in handling the crystal and the voltage on the crystal oscillator valve must not be raised above 300 volts, but even with these limitations it is worth while to work the crystal on the fundamental for the 45-metre band. The reason for this will be more apparent later.

For the amateur bands this leaves the 45 and the 90-200 metre band for fundamental operation of the crystal and the 32 and 23-metre band for harmonic operation.

Harmonic Operation.

When harmonic operation is employed it is difficult to give accurate figures for the power which will be required in the successive amplifiers. This is partly due to the fact that it is not possible to determine what strength the harmonics will be in the various circuits. Also, on the short wavelengths in question, many effects come into play

Digitized by Google

which cannot be foreseen, such as stray coupling between coils, etc.

From various experiments, using a power of up to 300 watts in the output stage (*i.e.*, the stage coupled to the aerial) it seems necessary to employ a power ratio* of 1 : 3

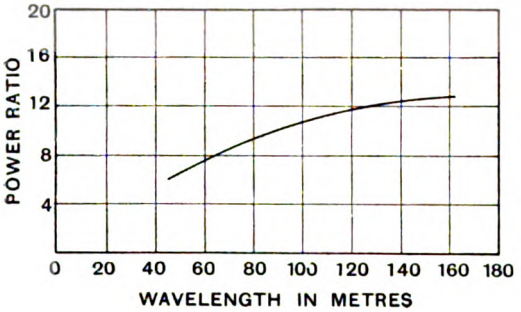

Fig. 6.

in the last crystal amplifier and output stage (between *B* and *C*, Fig. 5). This holds roughly whether the second, or third, harmonic is used. If the fourth harmonic is used a power ratio of 1 : 2 should be allowed. In these experiments the harmonics were augmented by using a high grid bias on the amplifying valve. Owing to the impossibility of determining the wave form of these high frequency oscillations, it is mainly a matter of experiment with a closed circuit and a hot wire ammeter or visual indicator which is tuned to the harmonic required, and the grid bias of the amplifier is then varied to give the maximum indications.

Fundamental Operation.

Using the fundamental of the crystal the conditions are more definite.

* 100 watts in stage *B* and 300 watts in stage *C* is termed a "Power Ratio" 1 : 3.

In general the power required in the successive amplifiers is about one-third that required when harmonic operation is used. It varies slightly, however, with the wavelength employed. With the lower wavelengths the power ratio has to be decreased slightly, due to the lower efficiency and due to the more uncertain conditions.

A graph shown in Fig. 6 gives roughly the power ratio required between the last amplifier and the output stage for the different wavelengths tried. It is seen that it is possible to work with a power ratio of 1 : 6 to 1 : 12. To be able to control, say, 300 watts in the output stage with a power of only 50 watts in the previous stage, is very unusual. For example, using a master oscillator, it has been found by many experimenters that it is necessary to use a power ratio of 1 : 1 to 1 : 3 to get sufficient control on the short wavelengths.

It is not difficult for any amateur to add a unit, such as is shown in Fig. 3, to his existing transmitter and thereby convert to crystal control. For the majority, using a power of 50 watts or less, it is only necessary to add a single crystal oscillator as in Fig. 2.

In Fig. 7 is shown the circuit diagram of the transmitter at present in use for the 45 and 90-metre band, using the fundamental of the crystal. It has been tested with a power input of up to 300 watts to the output stage. This is the maximum available.*

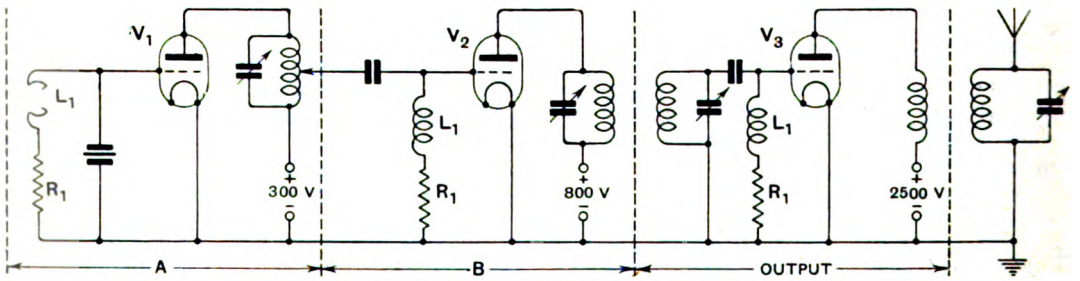

Fig. 7. L_1, *H.F. choke.* R_1, *grid-leak.* V_1, *receiving type power valve.* V_2, *40-watt type valve.* V_3, *250-watt valve.*

* Recently the writer has successfully applied this method to an amateur station using a power of 1kW. Harmonic operation with the combination of valves shown in Fig. 8 was used. A higher voltage on the output stage was the only difference. The power ratio mentioned was found approximately correct.

Digitized by Google

In Fig. 8 is shown the circuit arrangement for the 32-metre band using harmonic operation. The second harmonic of the crystal is at present employed.

In each case it will be noticed that the first amplifier *B* is used as a pure high frequency stage. This is found convenient as there is no trouble with self oscillation in this stage and it simplifies the adjustment.

To obtain sufficient control using the harmonic of the crystal the extra stage *C* must be added. The same voltage is used for stage *C* and for the output, but the grid bias of stage *C* is increased until the power drops to the required figure. This method accentuates the harmonics; this is required. is in the output stage that the capacity and inductance changes occur which it is desired to overcome. Between the subsidiary stages of the crystal amplifier (such as *B* and *C*, Fig. 8) the ratio may be increased slightly as the conditions are more stable. As the power is low in these stages it is not such an important factor to obtain high ratios.

For the successful operation of this method it is vital that the inductances be of good design. On these high frequencies a poor dielectric will heat up; this either softens it, allowing the wire to move, or changes its specific inductive capacity, which in turn causes a large capacity and inductance

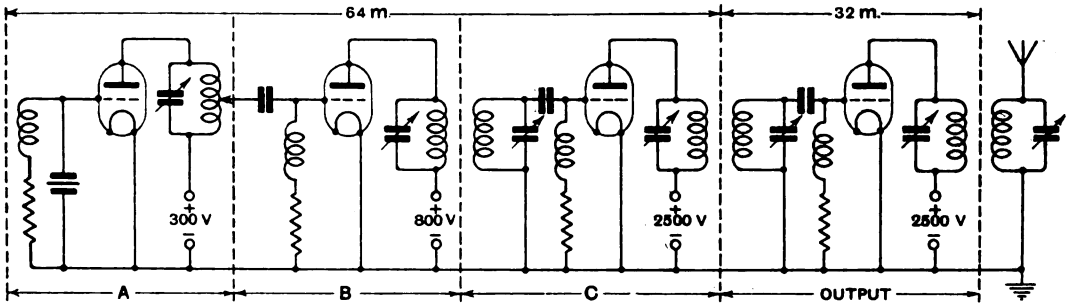

Fig. 8.

The crystal oscillator and first amplifier (*i.e.*, *A* and *B*) are always left running while the set is keyed, by cutting off the power to the final stages.

Some General Considerations.

It is evident from the properties of this method that the amount of control exercised on the output by the crystal stage is dependent upon the power in the crystal stage. The power ratios given have been found sufficient to hold the output stage in sychronism with the crystal amplifier over the range of capacity and inductance variations which are usually found in transmitters. It may vary with individual cases. In the case of a transmitter on a ship where the rolling of the ship produces large capacity changes in the aerial. system, it might be necessary to decrease the power ratio.

So far, the main consideration has been the power ratio between the last stage of the crystal amplifier and the output, as it change. The crystal amplifier will not be able to control this large change unless the power is considerably increased. It was found that an inductance wound on wooden strips boiled in paraffin wax was quite suitable for the 90-metre band. On 32 metres the wood heated to such an extent that the wax melted. The frequency drift due to this amounted to several thousand cycles. A self-supporting coil, wound with copper strip, or one wound on good quality ebonite, is quite satisfactory. Similar precautions should be taken with high frequency chokes.

From all aspects, it is the low power station which can profit most by crystal control. Difficulties, such as just mentioned, prominent with powers of over ½kW, are not noticeable with low powers. Design need not be so strictly considered. The cost of a crystal oscillator using a receiving type power valve is not great. It is suitable for controlling 50 watts or so in the output stage.

Digitized by Google

Another factor which has been found important is that of filament temperature. If the filaments of the amplifiers are under run it is difficult to get any control whatever. The rated values for the filament are usually satisfactory, but with dull-emitter valves it is best to experiment with higher values as the emission may have fallen off.

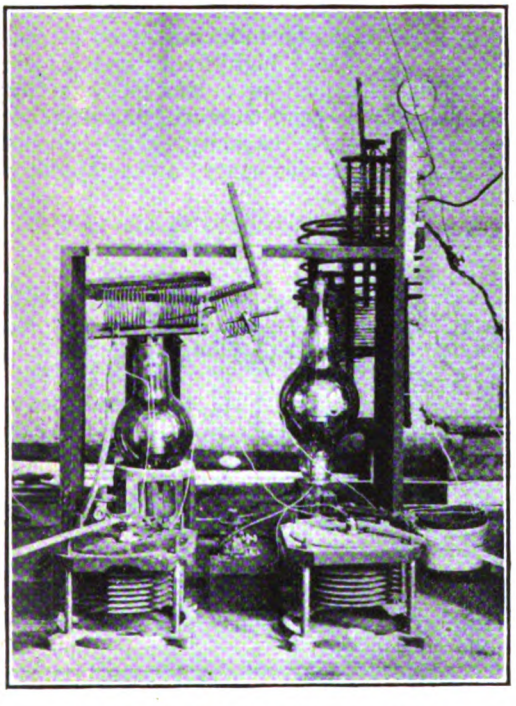

Amplifier C, Fig. 8, and the output stage.

Adjustment.

In common with all circuits of this kind, a little patience is necessary at first until the behaviour of each circuit is understood.

The first step is to set the crystal oscillator working (*A*, Fig. 7). A tap from the grid circuit of *B* is taken to the plate inductance of the crystal oscillator and the plate inductance of *B* is tuned to resonance (indicated by the minimum value of the plate current). The wavelength is then found on a wavemeter or oscillating receiver. The crystal oscillator is now switched off. The amplifier is adjusted roughly to this wavelength. The crystal is switched on and a beat note is obtained in the receiver. The frequency of the output (considering Fig. 7) is varied until it passes through that of the crystal oscillator. The beat note in the receiver increases considerably in strength when the two frequencies are synchronised. As the frequency of the output circuit is gradually decreased by varying the grid tuning condenser and approaches synchronism with the crystal oscillator, a beat note will naturally be formed between the two oscillations. This then disappears as they synchronise. There will then be a range over which no beat note is obtained. There will come a point where the oscillations again fall out of step producing another beat note. The output condenser should be set in the middle of the band in which no beat note is obtained. This position is indicated by a minimum reading of the milliammeter in the plate circuit of stage *B*. The other stage in Fig. 8 is similarly adjusted. If the stages are not properly synchronised a whole series of rough beat notes will be heard in an oscillating receiver as the tuning condenser is varied. When the set is working correctly, beat notes will only be obtained when the receiver is tuned to a harmonic of the transmitter. This beat note will have all the characteristics of a crystal oscillator.

The coupling between the stages is fairly loose when fundamental operation is being used but for harmonic operation it should be as tight as possible. From this it follows that the ratio of inductance to capacity should be kept high. Only a small parallel capacity should be added.

In general, if the coupling is correct and the set is in synchronism there will be no movement of the milliammeter in the plate circuit of the crystal oscillator as the set is keyed.

Inductive coupling between the stages has been considered throughout as it was found to be the most satisfactory. Various methods of capacity coupling were tried but the results were inferior.

When constructing a holder for a quartz crystal, ebonite should be avoided as the sulphur in the ebonite slowly oxidises the metal surfaces. The metal surfaces and the crystal should be kept clean. Carbon bisulphide or carbon tetrachloride (which is non-inflammable) may be used. For experimental work, where the crystal may be changed frequently, it has been found

Digitized by Google

more convenient to use a large metallic surface for the electrode which is connected to earth and a small movable electrode, weighing two or three ounces, just resting on the crystal for the other.

If a crystal is required for permanent operation and is not likely to be moved for some time, it is necessary to attach a very small piece of mica to each corner on both sides of the crystal so that there is a small air gap between the crystal and the metallic surface. It has been found that the crystal sometimes sticks to the metallic surface unless this is done. It is apparently necessary to have a small air film between the surfaces for successful operation. This gradually gets squeezed out as the crystal oscillates, until the surfaces come into direct contact and then stick. This is mainly noticeable when the surfaces are very true.

The advantages of crystal control mentioned below may help those who are not fully acquainted with the subject to decide whether to make the change.

The main feature of the oscillating quartz crystal is, of course, that its frequency of oscillation is constant. This is due to the mechanical nature of the oscillation, which is dependent on the linear dimensions of the crystal, as in the case of a tuning fork, rather than on any electrical resonance of inductance and capacity.

This allows a transmitter to maintain a constant frequency despite aerial swaying, etc. It also solves the keying problem which is so difficult on the short waves. The set may be keyed in the most economical manner, as the methods which produce frequency changes in a self-excited set cannot do so when the frequency is maintained constant by a crystal.

Any irregularity in the H.T. supply to a self-excited transmitter on the short waves, due to imperfect smoothing, causes the quality of the emitted wave to be rough and broadly tuned. When using a crystal controlled transmitter on a supply of this kind the rough note and spreading of the wave is entirely absent. If the 50-cycle supply is used with a full wave rectifier, a smoothing capacity of $\frac{1}{2}\mu$F is ample to give a pure note. With a self-excited circuit a capacity of at least 4μF would be necessary to give a note of similar purity. The saving effected in this way goes a long way to counterbalance the expense of the crystal amplifier. The extent to which this property of crystal control may be utilised is well illustrated by the fact that some commercial stations on the short waves using crystal control employ the "self-rectification" circuit throughout (*i.e.*, for the amplifiers and output). This means that no separate rectification whatever is used. The amplifying stages have two valves, one connected on each side of a split secondary supplying the A.C. H.T. voltage (see Fig. 9). The quality of the note obtained is excellent. Only a small percentage modulation is present, quite negligible for morse working.

This property of crystal control is due to the following reason :—

The quality of a carrier wave depends upon two factors: the percentage of frequency

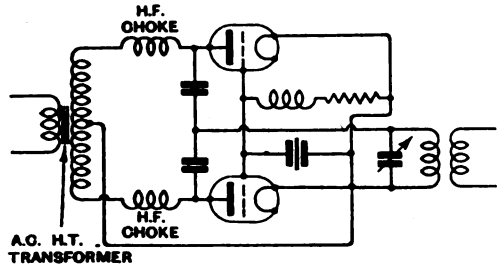

Fig. 9. *In the subsequent circuits the crystal is replaced by the grid coil and condenser.*

modulation (*i.e.*, the periodic variation of the frequency caused by H.T. voltage variations) and on the percentage of amplitude modulation (*i.e.*, the actual variation in strength produced by the varying voltage supplied to the transmitting valve). Of these the former is by far the most important on wavelengths below 200 metres or so. The variation in voltage supplied to the valve causes its internal resistance to vary, this in turn causes a small frequency change.

With crystal control the most important factor is eliminated, as the crystal holds the frequency constant despite the changes due to H.T. voltage variations. The amplitude modulation present is then the only factor influencing the quality of the carrier wave. This is a minor point.

It has been shown that it is not possible to modulate a self-excited circuit on wavelengths below 500 metres without getting

Digitized by Google

frequency modulation and consequent distortion of speech and music.* The quartz crystal is the best solution of this problem, especially for the short wavelengths.

The constant frequency of a crystal transmitter allows the use of grid control modulation with considerable success, as the usual accompanying frequency modulation is absent. The output stage should be modulated. The grid bias should be adjusted so that the modulation only swings the grid potential along the straight part of the characteristic curve of the valve.

Conclusion.

Using pure high frequency amplification, the crystal frequency is the only frequency which can be emitted. Large changes of inductance or capacity in the amplifiers only reduce the radiation. Using this new method the crystal stabilises the frequency only over a certain finite range which is made sufficient to cover any inductance or capacity changes likely to be met in a transmitter.

This is the fundamental difference between the two methods.

Many modifications of both methods have been tried. The new method described has decided advantages from the point of view of simplicity, flexibility, efficiency and reliability.

It has been in use at the writer's station 2SZ for the past six months with considerable success.

* "Some Studies in Radio Broadcast," *Proceedings, I.R.E.*, February, 1926.

Opening of the I.E.E. Session.

Dr. Eccles' Presidential Address. [R060

THE opening meeting of the I.E.E. Winter Session, 1926-27, took place on 21st October, when Dr. Eccles, the new President for the current year, delivered his Presidential Address.

Before calling upon the new President to take the chair, the retiring President, Mr. R. A. Chattock, presented the premiums awarded for papers read during the 1925-26 Session. In the Wireless Section these were awarded to :—

Mr. J. Hollingworth ; Dr. R. L. Smith-Rose and Mr. R. H. Barfield (jointly) ; Messrs. R. A. Watson Watt and J. F. Herd (jointly).

These awards were all made on papers describing work carried out under the auspices of the Radio Research Board.

To the disappointment, doubtless, of many wireless members present, the new President did not deal specifically with high frequency engineering, with which he has been so closely connected. He pointed out that in the circumstances two courses were open, one to deal with a specialistic subject, and the other to review electrical engineering and practice in its most general terms. He had decided to take the latter course, and proposed to trace and compare the main lines of modern electrical development under the general headings : (1) Electrical supply industrial ; (2) General use of electricity ; (3) Communications ; (4) Electrical trade.

In the first two sections the various statistics quoted went chiefly to show that British electrical development was backward.

In communication, Britain was shown to occupy a leading position in the ownership and operation of cable routes.

In connection with wireless the presentation of facts was chiefly in statistical form, the subject being reviewed under the heads of Long Range Telegraphy and Telephony ; Short Wave Stations ; Other Purposes. In the first connection particularly it was shown that the British Empire was as well equipped as any country, while the only long distance telephony service existing was between America and the new British Station at Rugby.

As regards Broadcasting, the statistics quoted again showed the British position to be satisfactory and to compare favourably with other countries.

The first meeting of the Wireless Section was held on 3rd November, when the Section Chairman, Prof. C. L. Fortescue, delivered his inaugural address, an account of which is given on page 740.

Digitized by Google

The Absolute Measurement of Resistance at Radio Frequencies.

By Raymond M. Wilmotte, B.A. **[R240**

THERE are many methods in existence for measuring the high frequency resistance of coils. They all possess their pitfalls, some of which are obvious, while others require much experience to be noticed.

In general these methods depend on the measurement of the impedance of a circuit at or near its resonant frequency. In all these cases assumptions must be made regarding the constancy of the amplitude or frequency or both of the E.M.F. induced into the circuit under investigation. Besides these assumptions, there are always pitfalls due to unknown stray capacities, mutual inductances, eddy current losses, dielectric losses, etc., which are to a very large extent unknown.

There exists a class of methods in which all these sources of error are eliminated. If a current is passed through a coil having resistance, the whole of the energy dissipated will be liberated as heat. An obvious way of measuring the resistance of a coil is, therefore, to measure the current and the heat evolved in it. Unfortunately the measurement of the heat evolved is very difficult and usually gives rise to large experimental errors. Many attempts have been made, however, by a number of investigators. T. P. Black, L. W. Austin, H. Abrahams, G. W. O. Howe and L. Lehrs have been the chief workers in this field. The following briefly describes the methods used by them.

T. P. Black used a method similar to that employed later by J. A. Fleming, but Black used it on coils and Fleming on straight wires. The method consisted of putting the coil (which was in the form of a long solenoid) inside a sealed glass vessel, which was connected by means of a capillary tube to another exactly similar vessel, but which contained a straight wire. A small drop of mercury was inserted in the capillary tube. It is obvious that, when the heat generated in the wire equals that generated in the coil, the mercury will remain stationary. High frequency currents were passed through each and their relative values adjusted until no motion of the mercury was observed. A knowledge of the ratio of the currents gives the ratio of the resistances of the wire and the coil, for the heat evolved is proportional to the product of the square of the current and the resistance.

L. W. Austin placed two similar coils in similar vessels in oil. Through one coil the high frequency current was passed and through the other direct current. The oil was stirred and the equality of temperature noted by means of thermo-junctions connected in opposition in the two vessels. When the temperatures of the two vessels are equal, the galvanometer connected to the thermo-junctions must, of course, show zero deflection. Much of the accuracy would depend on the effectiveness of the stirring.

H. Abrahams measured the direct current resistance of the coil before and after passing the high frequency current. The rise in temperature of the copper of the coil could thus be found. He repeated the experiment, using direct current and thus obtained the ratio of the direct to alternating resistance of the coil. Few details are available of these experiments of Abrahams, but it would appear that very large currents would be required to obtain a reasonable accuracy.

G. W. O. Howe measured the temperature of a coil, after passing the high frequency current, by means of a thermo-junction placed outside the coil near the centre turn. He then found the direct current, which produced the same effect. It will be noticed that the magnetic field falls off very rapidly just outside a single layer coil. (This is shown in an article by the author on parasitic losses in coils in the May number of *E.W. & W.E.*) The eddy currents produced in the thermo-junction will therefore form no appreciable source of error.

Digitized by Google

L. Lehrs enclosed the coil in a vessel connected to an extremely sensitive manometer and adjusted to high frequency and direct currents, so that no change could be seen on the manometer on switching from one to the other.

We see that there is no lack in the variations of the methods used and the results obtained give varying degrees of accuracy.

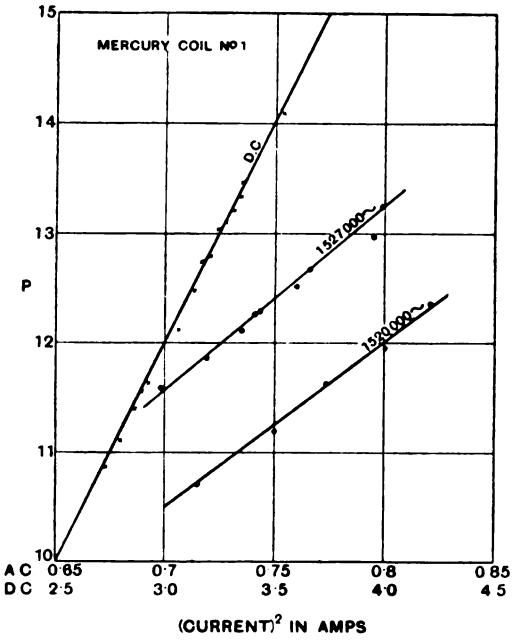

Fig. 1. *Straight lines obtained experimentally with coil 1, from which the resistance can be calculated.*

A source of error in those methods may arise from the fact, that the heat emitted at high frequencies is not the same for all the turns of the coil, but will be greater for the outside turns (where the magnetic field is large and produces eddy currents in the wires) than for the centre ones. This will be an important cause of error in the methods of Austin and Howe, the latter however only used long solenoids and in this case the error would be much minimised. Another source of error is due to the change in temperature of the air during the experiments or slight inequality of the vessels in the differential methods; the former would occur in the method of Abrahams and the latter in those of Black and Austin.

The method of Lehrs seems the most accurate, but it is probably accurate only when the coil is of small dimensions. In fact nearly all these methods suffer from this.

Now, to test the accuracy of ordinary methods of measuring resistance, it is advisable to measure a coil, in which the sources of error inherent in the methods are large. For this purpose the dimensions of the coil should be large (so that stray capacities may also be large), the resistance of the coil should be low (so that unknown losses may produce an appreciable percentage of the total) and the frequency should be high.

Most of the investigators mentioned above were not trying to check existing methods of measurement, so that they were not particularly interested in measuring coils of large dimensions and low resistance. In order to do this the author has used the following method :—

A coil was made of glass tubing filled with mercury. One end of the coil was stopped and the other terminated in a capillary tube, on which were two marks at a distance of a few centimetres. The coil thus formed behaved as its own thermometer. When the mercury stood at one mark, the mean temperature of the coil was absolutely definite and quite independent of the temperature of the air.

High frequency current was passed and the time T_H, which the mercury took to move from one mark to the other was noted. The current was stopped, and the time T_C taken for the mercury to fall from the top mark to the lower one was also noted.

Assuming Newton's law of cooling, it is easy to prove that, if the temperature of the air remains constant during the experiment, the rate at which heat is produced in the coil is proportional to

$$\coth \frac{K}{2} T_H + \coth \frac{K}{2} T_C$$

where K is a constant depending on the coil.*

This expression will be called P and is proportional to I^2R.

It will be seen that P is independent of the temperature of the air. Also, if P is plotted against the square of the current, a straight line passing through the origin should result. This was found to be the

* $\coth x$ = hyperbolic cotangent of $x = \frac{e^x + e^{-x}}{e^x - e^{-x}}$

Digitized by Google

case. Moreover the slope of that line is proportional to the resistance.

By repeating the experiment with direct current, the ratio of the alternating to direct current resistance of the mercury coil was found.

The coil acts as an exceedingly sensitive thermometer, so that the distance between the marks on the capillary tube represented a difference of temperature of only $\frac{1}{4}$°C. and the energy dissipated in the coil only of the order of one watt, allowing a comparatively small current (of the order of one ampere) to be used. This is important for, especially at high frequencies, uncertainty exists in the absolute value of a current measured by thermo-junctions, if the current is at all large. An instrument may compare accurately two currents of the same frequency, but may be in error when comparing a large current at radio frequency with direct current.

Two mercury coils were made and measured. They were of somewhat ungainly appearance, owing to the difficulty of accurately bending and fusing together long lengths of glass tubing. However, they served their purpose, for regularity in the dimensions did not enter the question.

Coil 1 had 9 turns and overall dimensions of 11 × 11 × 8 cms. Coil 2 had 15 turns and overall dimensions of 16 × 16 × 22 cms.

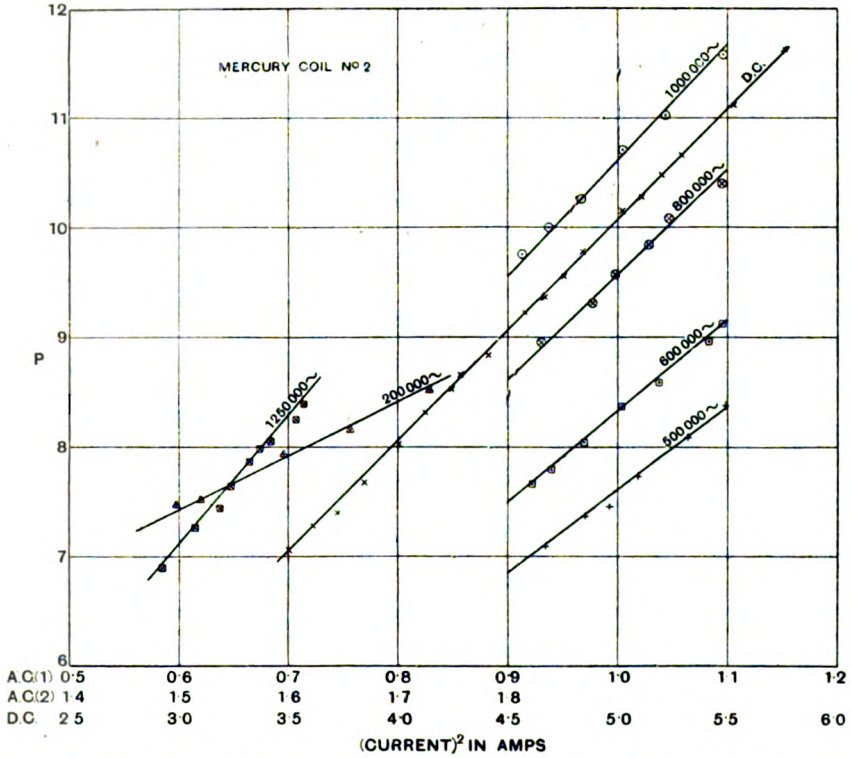

Fig. 2. *Straight lines obtained experimentally with coil 2, from which the resistance can be calculated.*

In Fig. 1 is shown the straight lines obtained when P is plotted against the square of the current. Fig. 2 gives the same straight lines obtained for coil 2. Fig. 3 shows the resistance of coil 2 plotted against the square root of the frequency. This method of plotting was chosen to obtain a flat curve, in which any small irregularity might show up.

Having thus found the resistance of the coils, by what may be termed an absolute method, there remained the checking of the ordinary methods of measurement. The coils were measured by two forms of the

Digitized by Google

variation of resistance · method. In method 1 gives results slightly too high. The
1 the mercury coil was · put in series with a difference is small, however, and, when
condenser and a therm o-ammeter (Fig. 4). great accuracy is not required and the
An E.M.F. was induced from an oscillatory resistance is not too low, method 1 should
circuit directly into the 1 nercury coil. The be sufficiently good.

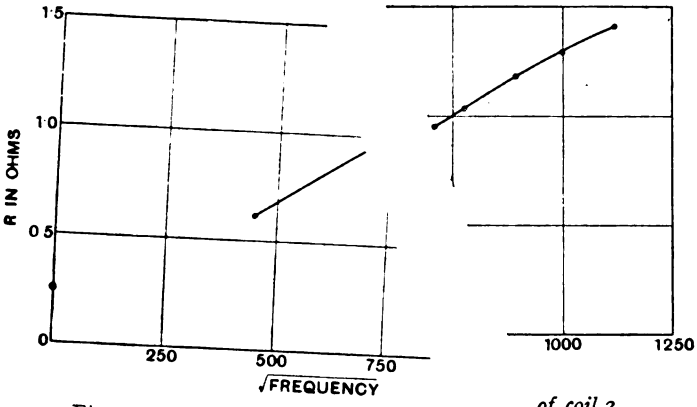

Fig. 3. *Variation of effective resistance with the square root of the frequen*

of coil 2
y.

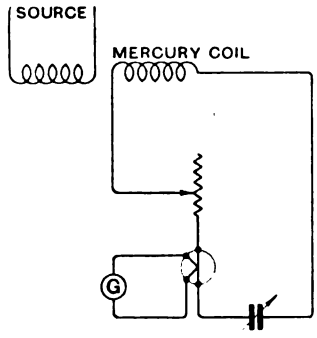

Fig. 4. *Method 1 of the resistance variation method of measurement.*

circuit was tuned and the resistance varie. 3y noting the change in deflection of th hermo-ammeter, the resistance of the ircuit was calculated. From this was ubtracted the resistance of the thermo- mmeter and the calculated resistance of he leads.

In method 2, the E.M.F. was induced in nother coil (Fig. 5). The resistance was easured as in method 1 with the two coils series. The mercury coil was then taken ut of the circuit and the resistance again easured. The difference gives the re- stance of the mercury coil. The results e given in the following table :—

ercury Coil.	Frequency kC.	Method of Measurement. (1)	(2)	Thermal.
o. 1	1,527	0.99	0.99	0.98_9
,,	1,250	1.09	0.91	0.90_8
o. 2	1,250	1.49	1.41	1.41_2
,,	1,000	1.34	1.29	1.29_2
,,	800	1.19	1.18	1.17_8
,,	600	1.07	1.04	1.03_5
,,	500	0.97	0.96	0.95_2
,,	200	0.62	0.62	0.62_4

t will be seen that method 2 gives accurate eement to within 0.01 ohm, while method

1. Those readers who are interested in these experiments will find them described in more detail in the *Proceedings of the Royal Society A.*, Vol. 109, p. 508, 1925.

The difference between methods 1 and 2 is small and not of great importance for the usual resistances measured. Experiments how that it does not lie in the condenser,

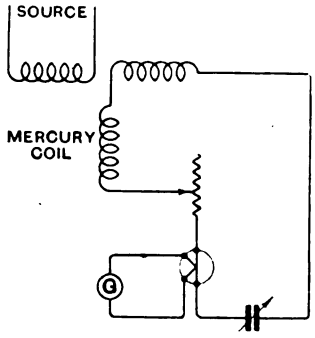

Method 2 of the resistance method of measurement.

Fig. 5. *variation*

which, from t resistance of lc ponding to a pov. Reaction back on; be the cause of th due to this may,

hese results, has a series ss than 0.01 ohm corres- er factor of less than 10^{-4}. o the oscillator appears to e discrepancy. The error in certain cases, reach

Digitized by Google

unexpectedly high values and care should be taken to ensure that the current in the tuned circuit of the oscillator remains *absolutely* constant throughout the measurement.

It should be emphasised, that it is only by taking every precaution, that the resistance variation method, and for that matter any method, gives accurate results and the circuit must be arranged with care, if appreciable and sometimes large errors are to be avoided.

Besides giving an absolute basis for checking ordinary methods of measurement of resistance, this thermal method gives the power factor of condensers. This appears to be so low in good condensers, that direct measurement fails and only gives an upper limit which, in the particular case considered, was 10^{-4}.

An interesting application of the method described above would be the absolute measurement of current at very high radio frequencies. Up to a frequency of about 1,000 kilocycles, small currents of the order of two amperes can be measured with fair certainty, for the thermal element of the ammeter can be made so thin that the skin effect can be neglected and the eddy current effect on the thermo-junctions is still negligible. At higher frequencies and for larger currents it is difficult to be absolutely certain of the magnitude of these effects.

If the resistance of a portion of an electrical circuit could be calculated and the heat generated in it measured, the current could also be measured from absolute principles. Now, the resistance at any frequency of a straight cylindrical conductor, screened for the whole of its length by a concentric metallic shield connected to one of its ends, is amenable to calculation.

The suggested method is now obvious. The straight conductor would be mercury in glass or preferably quartz. It would be calibrated with direct current as in the case of the coils and the heat generated measured by the expansion of the mercury. In practice it would probably be found useful to surround the shield with ice so as to keep the temperature as uniform as possible. The effect of the dielectric constant of the glass or quartz could be allowed for, but the dielectric loss in the medium would be a source of error, which would probably be made small by designing the system so as to make the potential gradient at the surface of the mercury small.

Digitized by Google

Television.

A paper by Mr. J. L. BAIRD read by Lt.-Col. J. R. YELF before the Radio Society of Great Britain on Tuesday, 26th October, 1926.

[R586.04

THE word Television is derived from the Greek *tele* (at a distance) and the Latin verb *video* (I see), so that the literal meaning is "seeing at a distance." This mixture of Latin and Greek is repugnant to classical minds and several alternatives, such as Teleopsis, have been recently suggested.

The word Television is already, however, part of the English language. It is used in the Patent Office, and appears in Murray's *New English Dictionary* and the *Encyclopædia Britannica*.

Some confusion still exists even in technical circles as to the exact meaning of the word, and it is still not infrequently misused to describe photo-telegraphy. Television means the transmission of an image of an object or scene by telegraphy or wireless telegraphy with such rapidity that it appears instantaneously to the eye of the observer at the receiving station, or it might more briefly be defined as "vision by telegraphy."

It is frequently stated that by a speeding up of photo-telegraphy until sixteen photographs were sent per second, television would be achieved. This is quite inaccurate. What would be achieved would be a cinematographic reproduction by telegraphy or telekinematography, a very different and much simpler thing than television which is the transmission of the actual living scene while it is happening.

The history of television is linked up with the history of Selenium, and may be said to date from the discovery of the light sensitive properties of that element.

Selenium is a metal, and has an enormous resistance to electricity. This property made it useful in the construction of high resistances used in telegraphy, and such resistances were employed at the terminal station of the Atlantic cable, a little village in the West of Ireland called Valentia. One afternoon the attendant, a Mr. May, was surprised to see his instruments behaving in a very erratic manner. It was a day of bright sunshine, and the sunlight fell occasionally upon his selenium resistances. He found every time the sunlight touched the selenium the needle of his instrument moved. The phenomenon was investigated and the light sensitive properties of selenium disclosed.

Selenium then gave a means of turning light into electricity, and the scientists of these days were quick to see in the selenium cell a means of providing vision by telegraphy.

A great number of devices were invented, and many of these were to a great extent perfectly feasible schemes, except for one point, and that was that selenium was much too slow in its action and too insensitive.

For over thirty years television remained at a standstill. "Time lag," as the sluggishness of selenium was called, proved a fatal barrier.

Selenium is not, however, the only means of turning light into electricity. Another discovery was made in 1888 by Hertz. Hertz found that the sparks which he was using in his experiments passed more readily when ultra violet light fell across their path. This discovery of Hertz led to the construction of what are known as photo-electric cells. These cells turn light into electricity, and are instantaneous in their action.

The development of these cells seemed to offer a substitute for the sluggish selenium, and an attempt was made to substitute them in the television apparatus.

Another difficulty at once made its appearance. The cells, although they were fast enough, would not respond to the very small light available. Shadows could be sent, for with shadows the light from a powerful lamp can be directed straight on to the cell. But where television is concerned, only the light reflected from the scene is available, and this light is very small indeed.

The three-electrode valve provides an

Digitized by Google

immensely powerful amplifier, but the amplification obtainable is limited, a stage is reached when irregularities in the emission from the first valve become audible and if the signal is not heard before this point is reached further amplification is useless, enormous amplification is obtainable before this stage is reached, but the response from the cell is very far below the limit. With an ordinary potassium cell a further amplification of something like a thousand times would be required.

In examining television devices the logical starting point would appear to be a consideration of the already existing very perfect

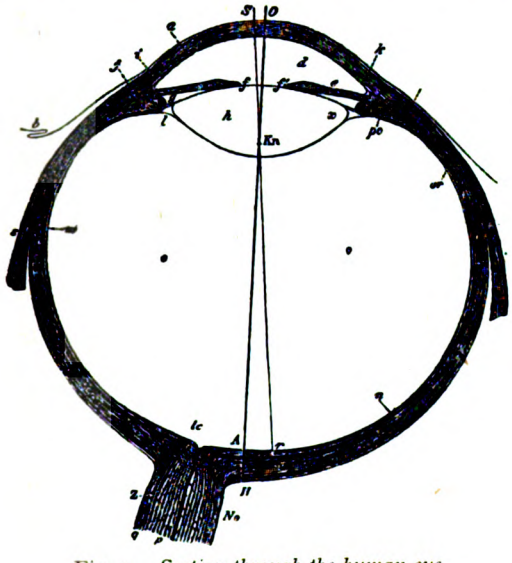

Fig. 1. *Section through the human eye.*

television system which nature has provided in the eye and the optic nerve. Fig. 1 shows a sectional drawing through a human eye. An image of the scene viewed is cast by the crystalline lens on to the retina at the back of the eye. This image has to be conveyed to the brain, and Nature's method of solving her television problem has formed the basis of many of the first television schemes. A clue to the solution of the problem is found in a close examination of the screen, which is called the retina. The surfaces of this is found to consist of a mosaic made up of an enormous number of hexagonal cells, and each of these cells is directly connected to the brain by a number of nerve filaments along which travel impulses which are dependent upon the intensity of the light falling on the hexagonal cell. Exactly how these impulses are generated is not at present fully understood, but they are almost certainly due to the presence of a light sensitive substance named visual purple, which flows through the hexagonal cells. The images which we see are thus built up of an extremely fine mosaic of microscopic hexagons of varying degree of light and shade. The number of these hexagonal cells is stupendous. In a normal human eye there are several millions.

The early inventors endeavoured to construct artificial eyes by substituting selenium for visual purple and building an artificial retina out of a mosaic of selenium cells, each of these cells being connected by wires to a shutter. This shutter opened when light fell on the cell connected with it and allowed a spot of light to fall on a screen. In this way each cell controlled a spot of light, the image being reproduced by a mosaic formed of these spots.

Models on these lines were actually made by several inventors. Rignoux and Fournier, two French scientists, constructed such a machine. This apparatus was intended only to demonstrate the principle, and had no pretensions towards presenting an instrument for television. The transmitter consisted of a wall covered with selenium cells, 64 fairly large cells being used. From each of these cells two wires ran to the receiving screen, which was made up to 64 shutters, each shutter controlled from its respective cell, and thus when a strong current from a brilliantly lighted cell at the transmitter arrived at the receiving station the shutter was opened and light was allowed to fall on the corresponding part of the receiving screen. By covering the transmitting wall with large stencils, letters of the alphabet were transmitted, and could be recognised.

Ernst Rhumer also, whose brilliant pioneer work in connection with wireless telephony is so well known, constructed a similar apparatus, and many other workers have been attracted by this system, but the thousands of cells, shutters and wires necessary made the practical adaptation of such schemes out of the question, and an endeavour was made to solve the problem in quite a different manner. Instead of using

Digitized by Google

a separate cell for each point of the picture it was produced to use only one cell, every point of the picture to fall in succession on this single cell, and the varying current from the cell to be transmitted to the receiving station, there to control a point of light traversing a screen exactly in step with the traversal of the image across the cell. The point of light was bright at the high lights, dim at the half tones, and completely out at the black parts of the image, the process to be carried out with such rapidity that, owing to persistence of vision, the eye would see, not a succession of spots, but the image as a whole instantaneously.

reflected in a zigzag path across a screen by means of two mirrors vibrating at right angles in the same way as the mirrors at the transmitter.

Fig. 2 shows another device of a more interesting character, that suggested in 1907 by Boris Rosing, a Russian professor. His transmitting arrangement was similar in principle to others, but his receiving device was very original, as he dispensed altogether with mechanical parts, and used instead the cathode ray. The rays can be produced in the form of a thin pencil-like discharge, and this pencil of rays can be moved in any direction, either magnetically or electrically.

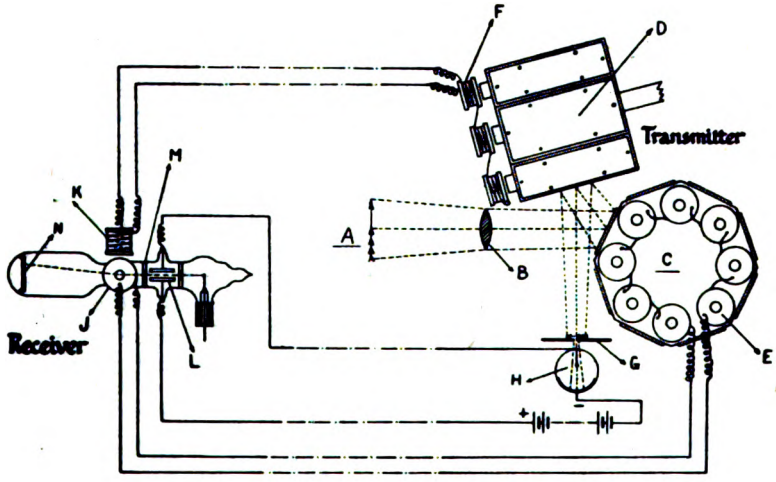

Fig. 2. *Principle of Rosing's apparatus.*

A great number of devices to accomplish this object were invented, and it will be possible to describe only a few of the most representative.

In the arrangement due to Jan van Szczepanik at his transmitting station two mirrors were employed vibrating at right angles to each other, the image being projected by a lens first on to one mirror and from this mirror on to the second one, which in turn reflected it on to a selenium cell. The results of the combined motions of the mirrors was to cause the image to travel over the cell in a zigzag path, and the current from the cell was transmitted to the receiving station, where it controlled the intensity of a spot of light, this point of light being

It has no weight, and therefore no inertia, and there is thus no limit to the speed at which it can travel. When this ray strikes a plate of fluorescent material a brilliant spot of light is produced, so that, by using the cathode ray in conjunction with a fluorescent screen, we can get a receiving device capable of following almost any speed.

Rosing used as his transmitter two mirror polyhedrons revolving at right angles to each other, their combined motion causing an image of the object to be transmitted to pass over a light sensitive cell. The varying current from the cell was transmitted to the receiver, and here it passed through a magnet which deflected the cathode ray away from an aperture placed in its path, the amount of

Digitized by Google

the ray which passed through being proportional to the current passing through the magnet coil. This ray was caused to traverse a fluorescent screen by currents to the mirror polyhedrons.

Mr. Campbell Swinton, independently of Rosing, devised a cathode ray system in which the cathode ray was used at both receiving and transmitting stations. This system was described in *Nature* three weeks before Rosing's patent was accepted in England.

I will give only a brief description of Mr. Campbell Swinton's device as a full account has already been given to this society by the inventor himself.

The transmitter consisted of a mosaic of little cubes of potassium, each cube insulated from the others, upon this mosaic was projected an image of the scene to be transmitted and the mosaic was traversed by a cathode ray, each cube discharging as the ray travelled across it, the discharge being proportional to its illumination. The fluctuating current thus produced controlled the intensity of a cathode ray at the transmitter, this cathode ray traversing a fluorescent screen in synchronism with the ray at the transmitter, mechanical exploring devices being thus dispensed with at both receiver and transmitter.

The apparatus of MM. Belin and Holweck is shown in Fig. 3. They are reported to have recently succeeded in sending shadows with this apparatus. The transmitter of Belin and Holweck consists of two mirrors vibrating at right angles to each other, and these mirrors cause the image to traverse a potassium photo-electric cell. The current from this cell controls the intensity of a cathode ray at the receiver, the ray being caused to traverse a fluorescent screen by magnets which are energised from an alternating current transmitted from a motor which moves the mirrors at the transmitter.

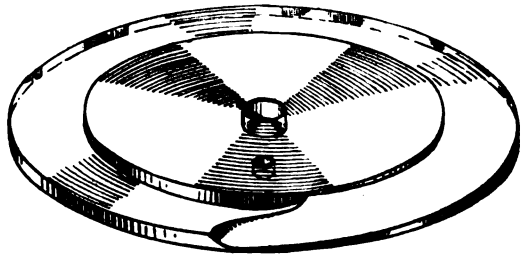

Fig. 4. *The glass disc used in the Jenkins' apparatus.*

In the U.S.A. Mr. Jenkins, whose name is, like that of Monsieur Belin, known in connection with photo-telegraphy, has, in conjunction with Mr. Moore, also succeeded in transmitting shadows. To cause their image to traverse the cell they use a prismatic disc. This consists of a circular glass disc (Fig. 4) the edge of which is ground into a prismatic section, the section varying continuously round the circumference. Light passing

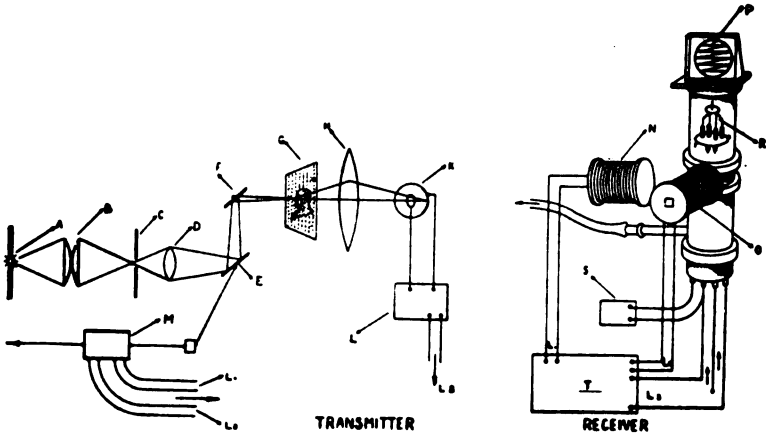

Fig. 3. *Diagram showing the principles of apparatus due to MM. Belin and Holweck.*

Digitized by Google

through the disc is therefore bent backwards and forwards as the section changes, and by passing the image through revolving discs of this nature, it is made to traverse a photo-electric cell. The current from this cell is transmitted to the receiving station, where it controls the light from a lamp invented by Mr. Moore. This lamp changes its intensity instantaneously in proportion to the current, and its varying light is caused to traverse a screen by a similar device to that at the transmitter.

In transmitting the shadow of an object we can use unlimited light, whereas in transmitting images of the actual object itself, only an infinitesimal light is available. To provide a sensitive device capable of responding instantaneously to this infinitesimal light was then the outstanding problem to be solved before television could be accomplished. About four years ago I decided to focus the whole of my attention on the problem of television, and realising that the first step towards the solution was the transmission of shadows, my early efforts were along those lines. The transmission of shadows proved a fairly simple matter, and some six months' experimenting enabled me to transmit crude shadowgraphs. Crude as they were, and certainly only shadows, it was very encouraging at that time to see upon the screen a definite indication that progress was being made. The difference between shadow transmission and true television was, I knew, immense, but how difficult the task would prove I did not realise until actually attempting it. For quite a long time no results of any kind in the transmission of the actual object could be obtained. After twelve months' continuous experimenting, however, I succeeded in sending outlines of simple objects in black and white. The step from shadows to reflected light had been taken. Although what was now done might in one sense be described as television, because it was the transmission of actual objects, though only an outline and as crude black and white effects, television in the true sense of the word was still a long way off. True television means the transmission of the image of an object with all gradations of light, shade and detail, so that it is seen on the receiving screen as it appears to the eye of an actual observer. Figs. 5 and 6 shows the mode of operation of my first machine.*

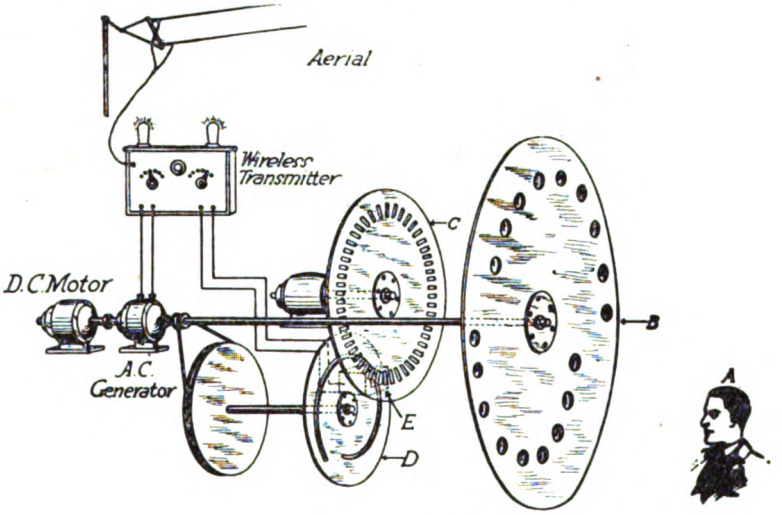

Fig. 5. *Principles of the first Baird transmitter.*

A. The object to be transmitted is placed in a powerful light. For convenience I used originally a metal filament projection lamp of 1,000 candle-power; when a dummy's head is being transmitted this is quite

* A model of the machine on which these first results were obtained was shown.

Digitized by Google

suitable, but it is much too bright to be comfortable for a human face: in fact, even a 500 candle-power lamp at a short distance has a most unpleasant effect on the eyes, and we now use a bank of 10 ordinary 40-watt lamps at about two feet from the sitter. These lamps are controlled by a resistance and give ample illumination without distressing the person being transmitted.

The lens disc *B* contains two sets of lenses in staggered formation, each lens casts a single strip of an image of *A* across the aperture *E* as the disc revolves, and as there are two sets of eight lenses the picture is divided into eight strips to obtain a finer subdivision, a rotating spiral slot *F* passes in front of the slot *E*. This slot rotates once for every four revolutions of the lens disc so that four times the number of strips are obtained. The slotted disc *E* revolves at 4,000 r.p.m. and interrupts the light at a high frequency.

The combined action of these revolving discs is then to cause an image of the object being transmitted to fall in a succession of little areas on to the light sensitive cell and thus generate a fluctuating current proportional to their light or shade.

This fluctuating current is transmitted to the receiving station by wire or by wireless.

At the receiving station the current is amplified, a three-valve low frequency amplifier being used, the amplified current controls the glow discharge lamp *K*.

This lamp shines through a rectangular slot in front of which revolves a slotted disc and a lens disc similarly arranged to those at the transmitter.

These discs revolve in synchronism with the corresponding discs at the transmitter, and their combined action projects the spot of light formed at the intersection of the spiral and the slot on to the screen *F*.

This spot of light traverses the screen in exact synchronism with the traversal of the image over the cell at the transmitter and also varies its brilliance in accordance with the intensity with which the cell is illuminated. The spot of light is thus bright at the high light and dim at the shadows and the operation is gone through with such rapidity as to cause the whole image to appear instantaneously to the eye due to persistence of vision.

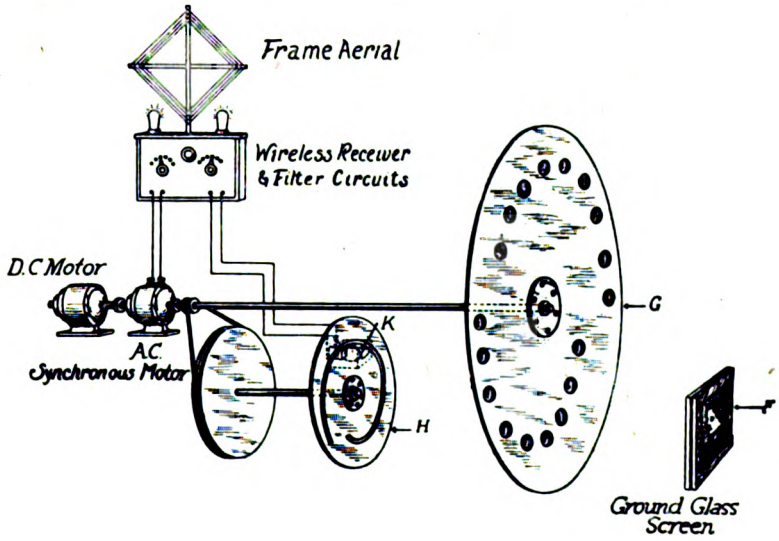

Fig. 6. *The first Baird receiver.*

Demonstrations were given at Selfridges in 1925, these being the first public demonstrations to be given of television, although many of what it was about, the idea being prevalent that this machine heralded the disappearance of all personal privacy, and was, in fact, a kind of telescope that had merely to be

Digitized by Google

focused on any desired spot and its fortunate possessor would see exactly what was going on there, through brick walls and round corners. One lady anxiously asked if her privacy could be protected by pulling down

Fig. 7. *Photograph of an image on the televisor screen.*

blinds. When it was explained to her that there was no more danger of her being seen unaware than there was of a private conversation being overheard by the ordinary telephone, her relief was great.

This demonstration at Selfridges attracted a considerable amount of attention, but a great deal of ground had still to be covered before it would be possible to have true television and see, for example, the living face with half-tone and detail.

The machine went back to the laboratory at Frith Street and was entirely remodelled, the optical system was improved, and the mechanical imperfections as far as possible eliminated. The effect of these alterations was greatly to improve the clearness of the images, but although much more sharp and distinct, they still remained mere black and white effects, without detail and without gradation of light and shade. The human face, for example, appeared on the screen as an oval of vivid white, and, if the mouth was opened, a flickering black spot appeared in the middle of this white oval. The trouble did not lie in the mechanical or optical part of the apparatus, but on the electrical side of the problem, and essentially in the light sensitive cell. I made many attempts to improve this, including the construction of a cell made from visual purple out of a human eye. There was considerable difficulty in obtaining the eye, but at length I was fortunate in finding a surgeon with a keen scientific interest who supplied a fresh human optic. This cell when first constructed gave a quite appreciable reaction to light.

At the present time, owing to the patent situation, I am not at liberty to give technical details of the device finally developed, but towards the end of 1925 the difficulties

Fig. 8. *At the transmitting end.*

were successfully overcome, and the images of various objects, including the living human face, were transmitted with half-tones and details. These images were at that time

Digitized by Google

very defective. The general effect has been compared to the earliest cinematographs, a continuous flickering being present and the images lacking in clearness and badly liable to distortion.

A photograph of one of the first images seen on the Televisor is given in Fig. 7. It is very imperfect but is the first of its kind.

These defects were chiefly due to the mechanical and electrical imperfections in construction. They are being steadily eliminated.

Fig. 8 shows subjects being televised to Harrow from 2TV. Some of you who have been working on 200 metres will have heard his face going through the ether as an unpleasant rasping sound. Different faces give different notes, and it is quite possible to distinguish between two different faces by their sounds.

The transmitter at 2TV is shown in Fig. 9. This is an ordinary telephony transmitter working on 200 metres with a power of 250 watts. Instead of sending out telephony, however, we send out these image sounds which some of you have heard. We have a licence for another transmitting station for our Harrow Laboratory, but we are only using this as a receiving station at present.

In conclusion, I will endeavour to answer a question which is very often asked, that is when are televisors to be available to the public? The answer to this question depends upon many considerations. The step from the laboratory to a marketable commodity entails a very considerable amount of development work and also financial organisation. If, however, we decide to place on the market an apparatus capable of receiving images of such restricted views as the head and shoulders of the person speaking into

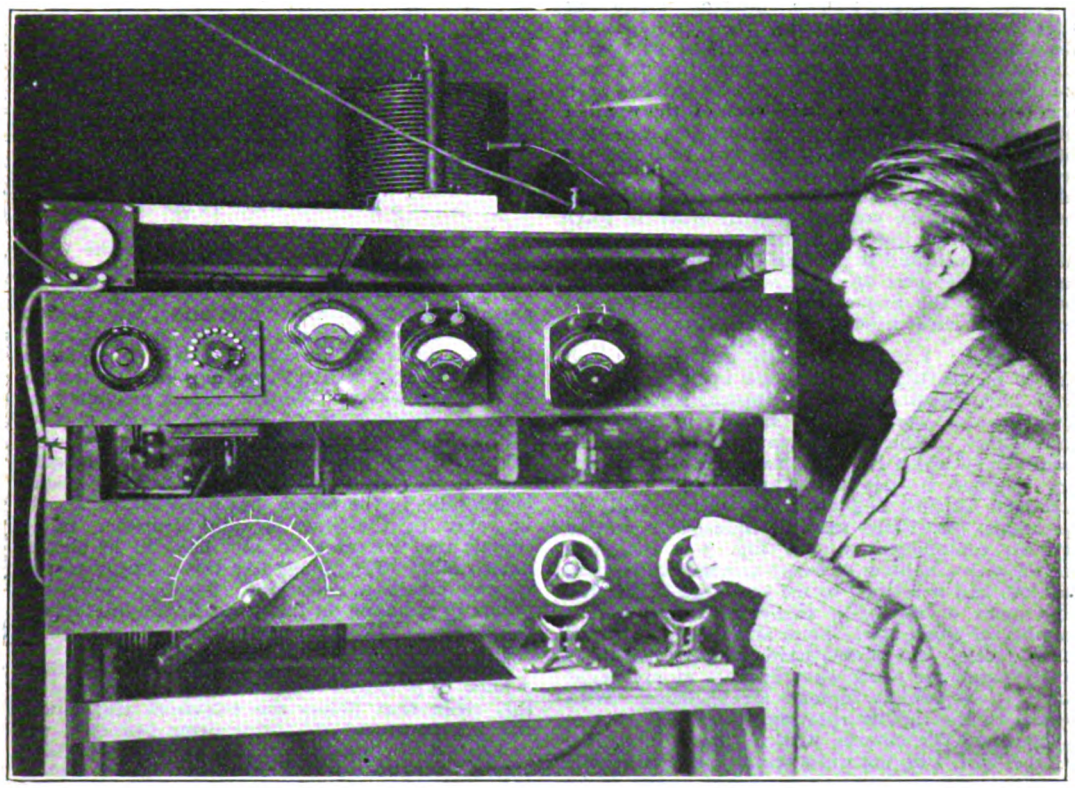

Fig. 9. *The experimental transmitter 2TV.*

Digitized by Google

the microphone, I think it is safe to state that such machines will be in the hands of the amateur experimenter before the end of the ensuing year.

Wireless telephony owes its present state of development in no small measure to the activities of the amateur, and unquestionably, the future development of television will be at least equally influenced by his co-operation.

DISCUSSION.

Mr. A. Hinderlich: One statement made was that Mr. Baird was placing the results of his researches at the disposal of amateurs who want to investigate this problem. I hope that we shall be given some account in detail of what has been accomplished—the bare facts, such as the number of dots per second and the number of gradations of light that have been transmitted, and also the weak spots in the apparatus, whether it is the photo-electric cell or some other part, so that research could be concentrated in order to solve the problem as quickly as possible. I hope that Mr. Baird will find it possible to add to his paper and give that sort of detail with regard to those portions of the apparàtus which at the present time are in most need of improvement.

A Visitor: I think Mr. Baird and Colonel Yelf are to be heartily congratulated upon the results they have obtained. The historical summary of the previous work on the subject is extremely interesting. There are a number of technical points upon which I, as an amateur in this subject, am anxious to get information, and possibly, although Colonel Yelf does not wish to reply to questions, Mr. Baird may be induced to send a written communication. In Fig. 5 a disc was shown with a number of lenses arranged in a spiral fashion, and it seemed to me that that is just the equivalent of having a single fixed lens and a number of small spiral holes arranged on a much smaller disc. No doubt, however, Mr. Baird has some reason for using what appears at first sight to be a somewhat clumsy arrangement. With regard to the rapidly rotating disc, which rotates 4,000 times per minute, with a view to chopping up the light, I do not quite see how this scheme is going to be used if a large number of impulses are being sent. Supposing, for example, 100,000 impulses are being sent per second. That would make a picture a few square inches in size, and the chopping up effect would have to be at least 10 times as rapid. That would be 1,000,000 per second, and one seems to get at once to a speed at which it would be impossible to rotate the disc rapidly enough. I am sorry that we did not hear more details of the actual apparatus that is being used at present, but no doubt the patent situation is responsible for that.

Lieut.-Colonel Yelf: I very much regret that I am quite unable to reply to technical questions. Mr. Baird told me, however, that he would certainly answer any questions that were put to him, on paper or in any other fashion. As I have said, he was very sorry that he could not get here in person. I cannot do more than to ask you to write to him or to see him, and I am sure he will clearly explain all these technical things.

Mr. Maurice Child: In order to get my remarks on record, and in order that we shall not miss an opportunity, as a Society, to make it known that we are alive to the forces which may be acting, and sometimes do act, against our interests as pure experimentalists, I want to raise the question—which no doubt Mr. Baird will answer, either in correspondence or in the Press—of the necessity which I gather from this paper has arisen for him to obtain a licence from the Postmaster-General to conduct his experiments on television. The 1904 Act very specifically lays down that it shall not apply in any way to the use of electrical machinery or the use of waves for the control of electrical machinery other than for the transmission of messages. I am afraid I have not quoted it absolutely correctly, but it is very nearly that. Now, it is important that we, as a Society, should watch the working of that Act very closely while it is still law. Of course, it may be that Mr. Baird has required a licence in order to use his apparatus for telegraphic or telephonic purposes as well as the transmission of pictures. As I read the Wireless Act, I think it is not absolutely necessary in law that he should obtain a licence to conduct experiments in wireless television, the wireless transmission of pictures, or the transmission of images. It is not necessary in law to obtain a licence when we want to control a boat by the use of Hertzian waves. We can control machinery at distances by the use of Hertzian waves, and we can generate those waves in any way we like without the necessity of going to the Postmaster-General for permission. Whether it is necessary or desirable in the future that some control should be taken by the State is another matter, but I submit that we, as a Society, have to be careful not to allow little things like this possibly to slip in and create a precedent. That is really my object in speaking on this point in the interests of the Society.

The Chairman (Brig.-Gen. Sir H. Capel Holden): I hope it is clearly understood by everybody in this room that unless the television transmitter can see you—and the transmitter has only the powers of the human eye, so to speak—nothing will be transmitted, and therefore, the control of television is very complete. It is rather curious, I think, that the apparatus invented by Mr. Baird should depend to a certain extent, if not entirely, upon what might almost be called a defect in the human eye; that is, the fact that the human eye has its limitations in seeing intervals of light and darkness—if I may put it quite simply—and is not able to pick up a number of pictures at more than a definite rate. I am talking now of a number of different pictures. We see this in the everyday application of the cinematograph. We know that the standard number of pictures per second—*i.e.*, the minimum—which is necessary to give you a continuous picture, or what appears to be a continuous picture to the eye, is 16. If it were not for that fact I think that the present ideas and apparatus for the transmission of objects—television, in fact—would not be practicable at all.

Digitized by Google

My own feeling is this, that if television is to come to stay it will come in some very simple and unexpected way. I remember that when the telephone was invented people, such as Reis and others who had been working on similar lines before, had not realised that a simple piece of apparatus such as the Bell telephone—which is still, I was going to say, unimproved, or very little improved—could possibly be made to record the variations and fluctuations of the human voice. The telephone, as we all know, passed the stage of being a curiosity a long while ago. At the same time, speaking as one who can remember the original telephone and the reception it had from scientific men, I can say that those who had not seen it said it did not exist, and those who did see it marvelled at it and said they did not understand how it could possibly work in the way that it did. Before sitting down I might just remind you that at the time of the Jubilee of the electric telegraph the late Sir William Preece, at the Conversazione held at the Natural History Museum, South Kensington, showed an apparatus which did exactly what we have been asked to picture in the future. My recollection of it is this. There were two rooms at the Natural History Museum in which the apparatus was situated, and one was asked to send one's friend to one end of the line, and to speak to him or her from the other end. One person did so, and another sat down at the table with the ordinary telephone receiver and transmitter. Beside the transmitter in front of the speaker there was a black velvet curtain, and having called up one's correspondent at the other end, and having received the reply signal in the ordinary way, the curtain went up, one saw one's friend sitting at the telephone and heard him, or her, speak. This was the gigantic success of the evening, but unfortunately, Sir William Preece, or the people who were responsible for the entertainment, omitted to state that the whole thing was a fake and that all one was doing was merely to look through a piece of thick plate glass, somebody having taken your friend right through the Museum and back again to the other side of the glass. The disastrous part of it was that some of the most prominent papers of the country had leading articles about it the next day, not having been warned that the whole thing was a conjuring trick, if you like to call it so.

Digitized by Google

Wireless Development Since the War.

I.E.E. Wireless Section — Chairman's Address.

[R599

Abstract.

THE opening meeting for the new session of the I.E.E. Wireless Section was held on 3rd November, the chair being taken by the Institution President, Dr. Eccles.

The first business was the moving, by Mr. E. H. Shaughnessy, of a vote of thanks to the retiring Section Chairman, Major B. Binyon, for his services during the previous session. Reference was particularly made to the work of Major Binyon in the recent new constitution of the Wireless Section, and to the high professional status now conferred by membership of the Section. The vote was seconded by Dr. R. L. Smith-Rose, and carried with acclamation, when Major Binyon briefly replied.

The President then introduced the Section Chairman for the new session—Prof. C. L. Fortescue—who proceeded to deliver his inaugural address.

He too made reference to the new constitution of the Wireless Section, and to the value of membership as a mark of professional standing. It had been further decided to inaugurate local Wireless Sections at the Institution Centres throughout the country, and one had already been started in the South Midland Centre at Birmingham.

The papers read before the Section constituted a record of current wireless development. It was notable that there had been recently no paper on short wave working, and he hoped that something of the kind might be given this session. Several papers read were of interest to line engineers, and it was to be hoped that there might be close co-operation between this activity of the main Institution and the Wireless Section to cover the complete field of electrical communication.

The outstanding feature of the past twelve months had been the opening of the Rugby Station. Whether or not this was the last long wave station, it was a monument to the engineering solution of practical problems. The continued development of Broadcasting was satisfactory, and great service had been rendered by this agency during the General Strike. The transmission of pictures was now developed to the extent of establishing a regular service. It was doubtful if the value of this was recognised, and it was possible that in the near future it might be more advantageous to transmit a sheet of print as a picture than by the present methods. Considerable possibilities of television were also opened up.

The Chairman then turned to a critical review of the development of wireless in the past seven years. In 1919, he said, most of the war-time developments were well known, but little had been applied commercially. He proposed to discuss progress in the matter of Transmitters, the Transmitting Medium, and Receivers.

Transmitters.

The position of the arc generator remained unchanged. The necessity for coupled circuits had already been recognised and it had been shown by P.O. engineers that the use of coupled circuits did a great deal to clean up the emission from an arc generator. It was unlikely that the arc could now compete with H.F. alternators and valve transmitters.

As regards H.F. alternators, the Alexanderson form, using a frequency equal to that of the aerial, required revolution at about twice the normal commercial speeds. The Latour machine in France approached more nearly to commercial forms. In Germany an alternator had been designed generating at 10kC frequency, and had been used with transformers for C.W. transmissions at 500kC (600 metres). Little information was available as to the working performance of alternators, but it was apparently satisfactory.

The development of the power-valve for transmission had followed the lines foreshadowed in 1919. Silica valves up to 25kW anode dissipation had been made, while the water-cooled type had become possible

Digitized by Google

by the improvement of technique, rendering it practicable to seal nickel into glass. These and silica valves were both permanently sealed and suffered the same disadvantage as the glass type in the matter of filament renewal. An alternative type, initiated in Britain but developed in France, used ground-glass seals, and was permanently connected to the pumps. The disadvantages of this were less serious than at first appeared, since any filament renewal at a transmitting station involved the use of pumps.

Practice varied as to the rating of valves, but anode dissipation with safe anode voltage appeared to be the most desirable standard to specify. This problem was allied to that of valve amplification factor and grid mesh.

The Rugby system of tuning fork control appeared to be likely to become standard. Looking ahead a number of transmitters might be controlled by one or two forks at a central standardising establishment.

Modulation for both morse and telephony had been perfected in detail. For the latter especially, the demand was for freedom from distortion, and the modern microphones, while less sensitive, satisfied this requirement. All emissions could be regarded as a carrier and sidebands—handspeed morse corresponding to a narrow band, high-speed morse and telephony to wider bands. Telephony could now be conducted with the carrier and one sideband suppressed, and it was possible that the same might be done for high-speed morse.

The Transmitting Medium.

In 1919 the need for a reflecting layer theory was already recognised. Down to 1,000 metres the Austin Cohen formula gave sufficient accuracy, but with waves of below 100 metres there were new factors, especially that of skipped distance. The present theory was that the layer was not a layer, but a region where the mean free path of electrons became a few centimetres. The effect of the waves on light electrons was discussed by the lecturer and illustrated by slides. The refraction was less with long waves. At about 200 metres wavelength there appeared to be a critical or resonance effect, marking the change of effective index of refraction from long to short waves. The loss of energy due to absorption by the layer was small. Refraction into space was perhaps more important, but he doubted the extent of this action.

Generally the effect was that with long waves the direct ray did not fall off rapidly. The upward ray was quickly reflected, and at about 10,000 metres regions of poor reception caused by this interference were definitely established. At greater distances the effects were complicated by multiple reflections. With short waves the direct wave fell away rapidly, and the effect beyond the skip was due to the returned waves coming down with just sufficient bend to arrive back at the earth at the receiving station. These waves would always be liable to changes in the layer, and short waves were always likely to be subject to marked fading. The matter was one in which the mathematical physicist, the geophysicist and the wireless engineer were all interested.

Receivers and Reception.

The lecturer then turned to the matter of the receiver. As regards special aerials the Beverage antenna had given good results, though its theory was still uncertain. It was generally thought its action was due to standing waves being set up by the horizontal component of the incoming wave, but it was pointed out that, even if there were no horizontal component, the vertical field would still tend to produce this result.

Receiver selectivity still depended on the balance between negative and positive reactance. The design of a receiver depended on the width of band to be received. For telephony all side bands up to 5,000 cycles were necessary, while the argument for high-speed telegraphy was similar.

There had been no important changes in the aspects of amplification, but the importance of neutralising electrode capacity was now fully appreciated. The alternative problem of shielding the grid had been tried, and good results had so far been obtained.

Atmospherics still imposed a lower limit on reception, and work on their wave form had shown the shapes of these impulses to be capable of expression as an infinite number of *sine* wave terms. A receiver of any band width will thus absorb the energy present for that band. No limiting device yet gave much change of the signal/atmospheric ratio, and the only other remedy was

Digitized by Google

increase of power. How far this could be carried was a matter for the urgent attention of the authorities concerned.

As regards high frequency measurements, the most important was that of frequency itself, and this could now be made with an accuracy of 1 in 100,000. This accuracy was not in excess of that required in practice, since the allocation of broadcasting frequencies involved no aural heterodyne at 1½ million cycles. Stations on the same wavelength must therefore be identical. The quartz oscillator was an important contribution to frequency stability.

Broadcasting.

As regards Broadcasting itself, in 1919 this was not in existence, although morse broadcast of news was already well known. In both Great Britain and America, post-war amateur interest had centred on telephony, and astonishing developments had occurred in five years. The problem of programmes would never be settled until every receiver had a choice of three programmes. In this connection transmitters near populous areas might need review.

Whatever the future progress under the Broadcasting Corporation, the Broadcasting Company had rendered great public service. Opinion was agreed that the controlling body must have a strong standing for the sake of both national and international arrangements.

As regards the interference from commercial traffic, especially on spark signals, the lecturer offered a suggestion of solution. The standard to be considered must be that of the number of individuals benefited. In this view the advantage was with broadcasting, which called for a lessening of interference from commercial coast work. This objection did not, of course, apply to distress or emergency signals. The lessening of this interference was largely a financial concern. Might it not be possible to apply some of the surplus broadcasting revenue to the reduction of this commercial interference?

On the motion of the President, Prof. Fortescue was cordially thanked for his address, which was ordered to be published in the Journal of the Institution.

Digitized by Google

Further Notes on the Laws of Variable Air Condensers

(With special reference to Aerial Tuning Condensers).

By W. H. F. Griffiths. **[R381·4**

IN a recent issue of *E.W. & W.E.** the present author developed a number of formulæ for the determination of the plate shapes necessary in order that variable condensers of the rotating plate type shall have definite laws connecting wavelength (or frequency) and angular movement.

The laws dealt with were the following :—

No.	Capacity Law (the generally accepted nomenclature)	Law of Wave-length (or frequency)	Plate shape given by :—
1	Ordinary straight line law (of capacity)	—	R_1
2	Square law (of area only)	—	R_0
3	Corrected square law	Straight line law of wave-length	R_2
4	Inverse square law	Straight line law of frequency	R_1
5	Exponential law	Uniform percentage change of both wave-length and frequency	R_4

Examples of plate shapes were also given for condensers to suit these laws and having quite normal values of residual capacity. In these examples a residual capacity value of 36$\mu\mu$F (at zero scale reading) was assumed, the actual minimum value of the condenser being augmented by coil distributed capacity, inter-electrode valve capacity, lead capacities, etc., to give this resultant residual value.

If the condensers to be designed are, however, to be used as aerial tuning condensers in parallel with aerial loading inductances or in other circuits where appreciable values of capacity are constantly in parallel with them, their plate shapes will be very different from those of the examples given in the previous article. As the ratio of maximum to minimum capacity becomes smaller, the plate shape naturally becomes

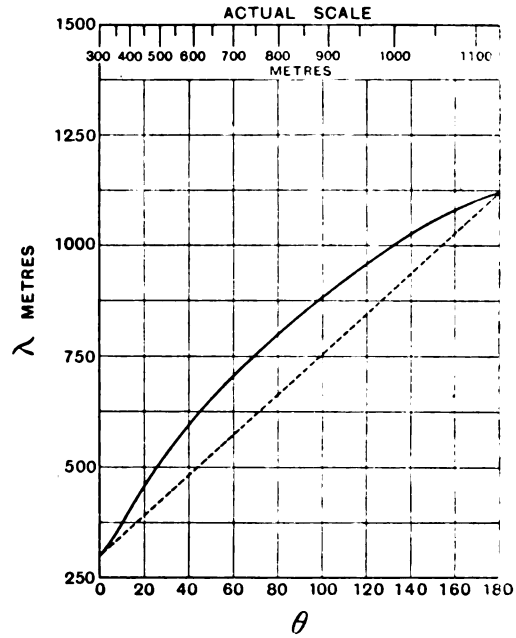

Fig. 1.

more nearly semi-circular, so much so that, in some cases of parallel tuning of large aerials, a variable condenser having ordinary semi-circular plates will give a wavelength law more nearly linear than that obtained by the use of corrected square law plates, designed for condensers having residual capacities of lower values.

If a variable condenser having minimum and maximum values of 16$\mu\mu$F and 480$\mu\mu$F

* January, 1926.

Digitized by Google

respectively is connected in a circuit whose augmenting capacities amount to, say, 20$\mu\mu$F only, its effective residual and maximum values are 36$\mu\mu$F and 500$\mu\mu$F. An ordinary semi-circular plate condenser having these values (and augmented to this extent) will give the wavelength curve, $50\sqrt{C}$, shown by the full line curve of Fig. 1, far removed from a linear law. The same condenser used in circuits having initial augmenting capacities of 84$\mu\mu$F and 284$\mu\mu$F, produces the wavelength curves of Figs. 2 and 3 respectively. From these curves it will be seen that a semi-circular plate condenser will give a fair approximation to an even scale of wavelength if its zero is sufficiently "set up" by a comparatively large value of constant parallel capacity.

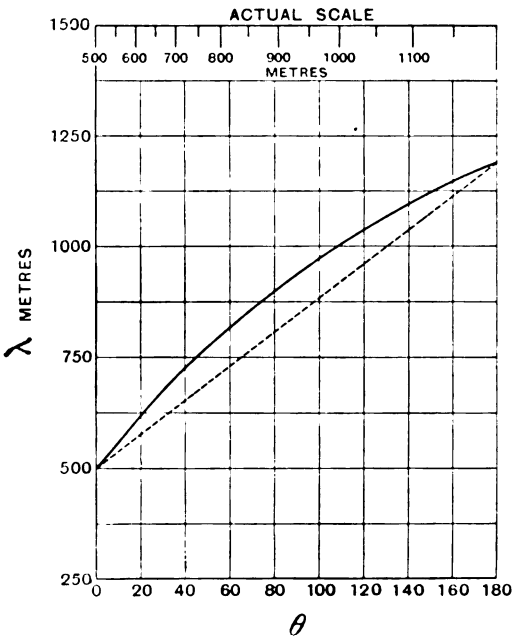

Fig. 2.

In order to visualise more clearly the wavelength scales corresponding to these three curves, scale graduations at 50-metre intervals have been included in Figs. 1, 2 and 3.

It is interesting to design the plate shapes that will be necessary in order to make these wavelength scales absolutely uniform using formula (13) of the previous notes.

$$R_2=[114.6\{2ka_2(a_2\theta+b_2)+K\}]^{\frac{1}{2}}$$

where

$$k=\frac{\text{Total plate area}-180K}{\text{Maximum capacity}-\text{Residual capacity}}$$

$K=\frac{r^2}{114.6}$ (r being the radius of the central cut-away portion of fixed plates.)

$$a_2=\frac{\sqrt{\text{Maximum cap.}}-\sqrt{\text{Residual cap.}}}{180}$$

and

$$b_2=\sqrt{\text{Residual capacity}}.$$

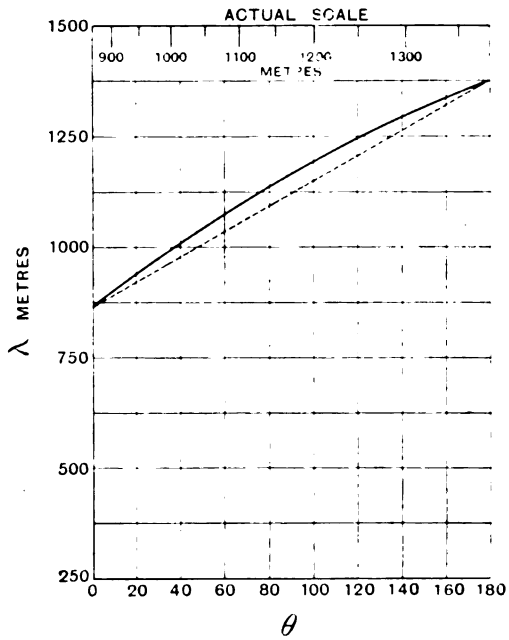

Fig. 3.

The radii of these plates at various angles θ are given in the table on next page; in each case the minimum capacity of the actual condenser itself is taken to be 16$\mu\mu$F and the maximum value 480$\mu\mu$F, the three cases being for added constant capacity values of 20$\mu\mu$F, 84$\mu\mu$F and 284$\mu\mu$F.

The total plate area is in each case assumed to be 20 square centimetres.

The plate shapes drawn from these values are given in Fig. 4, A, B and C; semi-circles have been drawn in on these shapes to facilitate comparison. In Fig. 5 the radii are plotted against angular displacement. Since all these plates have been designed

Digitized by Google

to give the same total area their radii at 90 degrees are equal and the curves therefore all cross at this point O. As the ratio

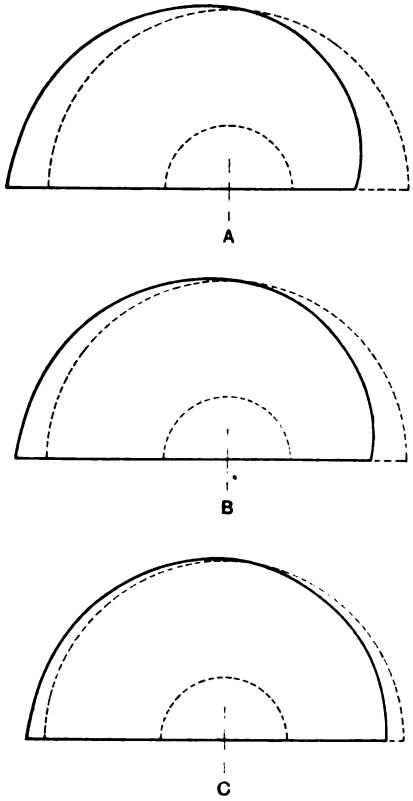

Fig. 4.

of maximum to residual capacity becomes less, the curves become flattened and more nearly horizontal, a horizontal line OD through the point O being, of course, the curve corresponding to an ordinary semi-circular plate of the same area, and therefore for a condenser of the same capacity.

In Fig. 6 two curves are given from which corrected square law plate shapes can be at once roughed out for any capacity provided that the ratio of maximum capacity to minimum capacity does not exceed 15.

The required total plate area being known, the plate radius (R_{90}) at 90 degrees is first found from

$$R_{90} = \sqrt{\frac{2\,(\text{total plate area})}{\pi}}$$

and the radii at 0° and 180° are then directly determined after reading the ratios R_{180}/R_{90} and R_{90}/R_0 from the curves of Fig. 6.

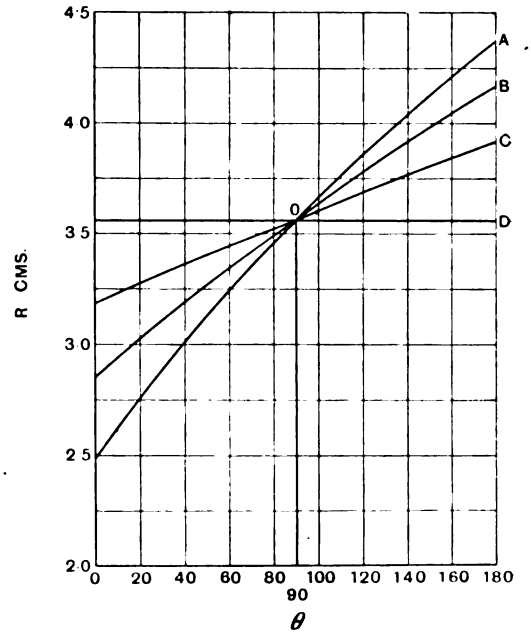

Fig. 5.

THE RADII OF PLATES AT VARIOUS ANGLES θ

θ deg.	Radius A Max. Cap. 500$\mu\mu$F. Resid. Cap. 36$\mu\mu$F.	Radius B Max. Cap. 564$\mu\mu$F. Resid. Cap. 100$\mu\mu$F.	Radius C Max. Cap. 764$\mu\mu$F. Resid. Cap. 300$\mu\mu$F.
	cms.	cms.	cms.
0	2.49	2.85	3.19
10	2.62	2.94	3.23
20	2.76	3.02	3.27
30	2.89	3.11	3.32
60	3.24	3.35	3.45
90	3.56	3.57	3.57
120	3.85	3.78	3.69
150	4.12	3.98	3.81
180	4.37	4.17	3.92

It should be noted that both of these ratios become unity when the ratio of maximum capacity to residual capacity is reduced to unity, *i.e.*, when the capacity change is made infinitely small the corrected square law plate becomes an ordinary semi-circular plate.

From a knowledge of the radii at 0°, 90° and 180°, a *corrected square law* plate may be sketched out with fair accuracy if

Digitized by Google

the ratio of the resultant (augmented) capacities at 180° and 0° is not greater than 15.

Although it is a relatively easy matter to design plates for condensers to conform to definite laws when such condensers are to be connected in *parallel* with other "zero augmenting" capacities, it is rather more difficult to design suitable plates for use in variable condensers to be used in *series* with constant fixed capacities, such as is the case with series aerial tuning condensers. It is important to be able to obtain definite "laws" from such variable condensers, also, for the reason that the accuracy and constancy of a large variable condenser is often

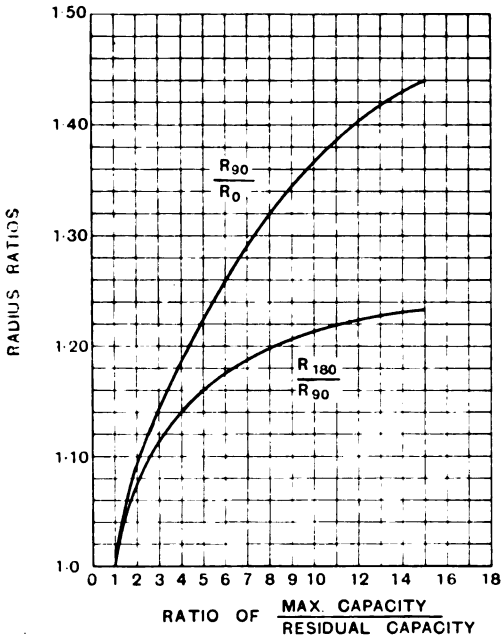

Fig. 6.

improved considerably by the addition of a low value *fixed air* condenser *of great constancy* in series with it. The chief objection to a series fixed condenser is its alteration of the "law" of the variable condenser with which it is associated. This, of course, is the case even with the linear law of capacity condenser of the ordinary semi-circular plate type as the curves of Fig. 7 show. This figure gives the capacity curve C of an ordinary semi-circular plate condenser of 500$\mu\mu$F maximum capacity and 36$\mu\mu$F residual capacity, and the corresponding curve of resultant

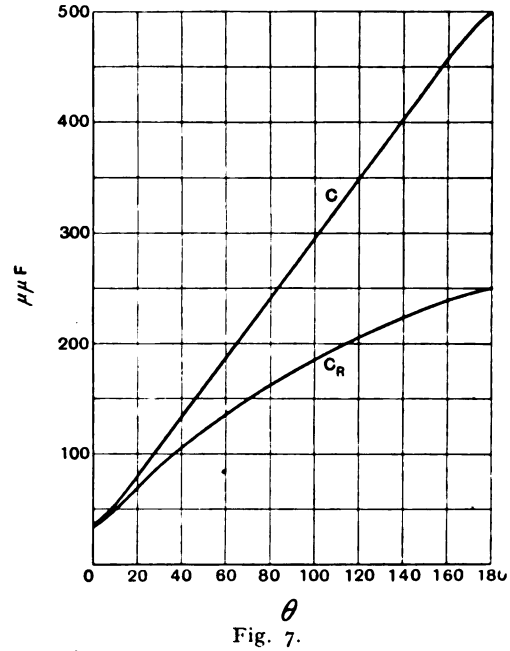

Fig. 7.

capacity C_R when a 500$\mu\mu$F constant value condenser is added in series with it. Since the wavelength of an oscillatory circuit

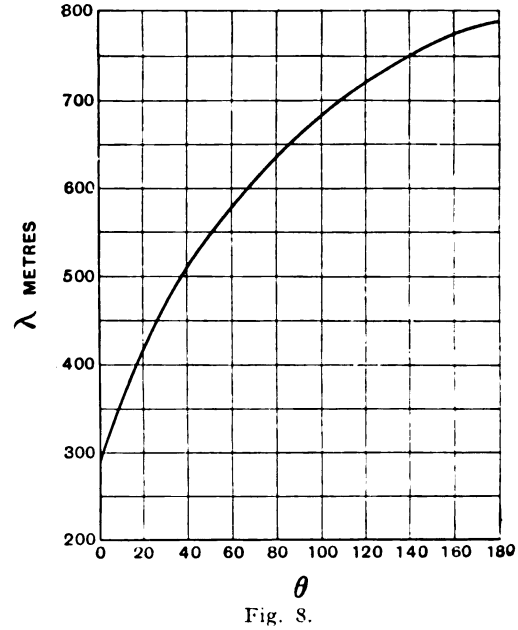

Fig. 8.

Digitized by Google

is proportional to the square root of its capacity it follows that the curve of wavelength plotted against degree scale reading will, in this case, be very far from ideal. The wavelength curve $\lambda = 50\sqrt{C_R}$ obtained with this resultant capacity is given in Fig. 8.

The design of a plate shape to give a straight line law of *capacity* when the variable condenser for which it is intended is used in series with a fixed capacity will now be proceeded with. This will be followed by a similar treatment of all the other special laws useful in wireless engineering.

Plate Shape for Straight Line Law of Capacity (with fixed series capacity).

Let C be the capacity of a variable condenser,

C_f the capacity of a constant value condenser in series with C,

and C_R the resultant capacity of the two condensers in series.

In order that C^R shall increase uniformly with angular rotation of plates, the law

$$C_R = a\theta + b \quad .. \quad .. \quad (27)$$

must be satisfied.

But

$$\frac{1}{C} = \frac{1}{C_R} - \frac{1}{C_f} = \frac{C_f - C_R}{C_f C_R}$$

$$\therefore \qquad C = \frac{C_f C_R}{C_f - C_R}$$

Hence, from (27), writing C_s for C in this particular case,

$$C_s = \frac{C_f\,(a_s\theta + b_s)}{C_f - (a_s\theta + b_s)} \quad .. \quad (28)$$

where a_s and b_s are constants depending upon the maximum and augmented residual capacities of the variable condenser and upon the value of C_f.

When $\theta = 0$, C_s must obviously equal the residual capacity of the condenser, and so :—

$$\text{Residual capacity} = \frac{C_f b_s}{C_f - b_s}$$

from which

$$b_s = \frac{C_f\,(\text{Residual capacity})}{C_f + \text{Residual capacity}} \quad .. \quad (29)$$

And when $\theta = 180$, C_s must be the maximum capacity of the variable condenser, and so :—

$$\text{Maximum capacity} = \frac{180 C_f a_s + C_f b_s}{C_f - (180 a_s + b_s)}$$

from which

$$a_s = \frac{1}{180}\left\{\frac{C_f\,(\text{Max. cap.})}{C_f + \text{Max. cap.}} - b_s\right\} \quad (30)$$

For any desired values of maximum and residual capacities and with any value of fixed series capacity therefore, the capacity at any scale position required to give a straight line law of *resultant* capacity can be directly calculated from equation (28).

C_s is, of course, a composite capacity consisting of the residual capacity plus that due to actual plate area in operation, and the part due to actual operative plate area is, naturally, equal to :—

$$C_s - \text{Residual capacity.}$$

Therefore, from equation (28), the area of the plate at any angle θ will be given by :—

$$A_s = k\left\{\frac{C_f\,(a_s\theta + b_s)}{C_f - (a_s\theta + b_s)} - \text{Res. cap.}\right\} \quad (31)$$

where k is a constant depending upon the total plate area.

This, however, neglects to take account of that semi-circular portion of the moving plate which is rendered inoperative by the cut-away portion of the fixed plates round the central spindle of the condenser. A term must be added to compensate for this.

The inoperative area is always a sector of a circle of radius r and is

$$\frac{\theta}{2 \times 57.3} \cdot r^2$$

and this may be written $K\theta$ where the constant $K = r^2/114.6$.

The complete expression for plate area now becomes :—

$$A_s = k\left\{\frac{C_f\,(a_s\theta + b_s)}{C_f - (a_s\theta + b_s)} - \text{Res. cap.}\right\} + K\theta \quad (32)$$

when $\theta = 180$, A_s is, of course, the total plate area, and if this is given, the value of the constant k may be found, for :—

Total plate area

$$= k\{\text{Max. cap.} - \text{Res. cap.}\} + 180K$$

from which the constant

$$k = \frac{\text{Total plate area} - 180K}{\text{Max. capacity} - \text{Res. Capacity}} \quad .. \quad (33)$$

Digitized by Google

From equation (5) of the original article* the radius R at any angle θ is :—

$$R_5 = \sqrt{114.6 \frac{dA_5}{d\theta}}$$

and, from (32)

$$A_5 = k\left\{\frac{C_f(a_5\theta + b_5)}{(C_f - (a_5\theta + b_5)} - \text{Res. cap.}\right\} + K\theta$$

$$\therefore \quad \frac{dA_5}{d\theta} = \frac{ka_5C_f^2}{\{C_f - (a_5\theta + b_5)\}^2} + K \quad .. \quad (34)$$

Therefore the radius of the uniform *resultant* capacity variation plate at any angle θ is given by :—

$$R_5 = \left[114.6\left\{\frac{ka_5C_f^2}{\{C_f - (a_5\theta + b_5)\}^2} + K\right\}\right]^{\frac{1}{2}} \quad (35)$$

As an example, a condenser having a maximum value of 500$\mu\mu$F and an augmented residual value of 36$\mu\mu$F has been taken, (these values are those of the ordinary condenser for which the curves of Figs. 7 and 8 were plotted), and a fixed capacity of 500$\mu\mu$F is assumed to be connected in series with it. The total plate area permissible is assumed to be 20 square centimetres and the centre "cut-away" radius r of fixed plates to be 1.2 centimetres. It is required to give a resultant uniform capacity scale.

θ deg.	R_5 (cms.)
0	2.74
10	2.80
30	2.92
50	3.06
70	3.22
90	3.40
110	3.66
130	3.88
150	4.18
170	4.52
180	4.73

The capacity curve C_5 for this condenser calculated from (28) is given in Fig. 9 together with its required resultant capacity curve C_R from (27). The tabulation below gives the radii (R_5) of the required plate calculated from formula (35) and Fig. 10 shows the plate shape drawn using these radii.

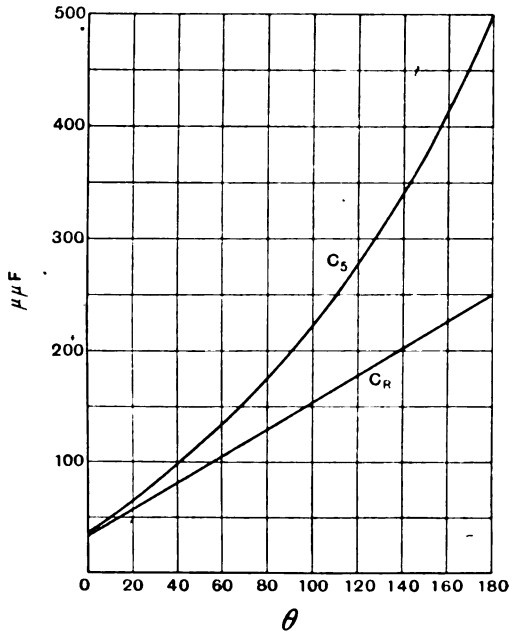

$$C_5 = \frac{C_f(a_5\theta + b_5)}{C_f - (a_5\theta + b_5)}$$

Fig. 9.

Beneath this plate shape is drawn the ordinary semi-circular plate of equal area for the condenser when the series capacity is increased to infinity (short-circuited).

In this case

$$C_1 = (a_1\theta + b_1)$$

where $b_1 =$ Residual capacity

and $a_1 = \dfrac{\text{Max. capacity—Res. capacity}}{180}$

$$A_1 = k\{(a_1\theta + b_1) - \text{Residual capacity}\} + K\theta$$

$$dA_1/d\theta = ka_1 + K$$

$$\therefore \quad R_1 = [114.6\{ka_1 + K\}]^{\frac{1}{2}}$$

which, of course, being constant, is the radius of a true semi-circle.

Fig. 11 gives the wavelength curve $\lambda = 50\sqrt{C_R}$ obtained with the condenser having plates of radii R_5 for comparison

---

* The radius of the plate at any angular position θ may be found in the following manner :—

For small angular increments, $\delta\theta$, the incremental areas may be regarded as sectors of circles of radius R, and as the area of a sector of a circle is :—

$$\frac{a}{2 \times 57.3} \cdot R^2 \quad \text{(Radian} = 57.3 \text{ degrees).}$$

$$\delta A = \frac{\delta\theta}{2 \times 57.3} \cdot R_2$$

From this

$$R = \sqrt{114.6 \frac{\delta A}{\delta\theta}}$$

and by making the angular increments $\delta\theta$ infinitely small the exact value of R is obtained thus :—

$$R = \sqrt{114.6 \frac{dA}{d\theta}}$$

Digitized by Google

with that of Fig. 8 obtained when using an ordinary semi-circular plate condenser in series with the same fixed capacity.

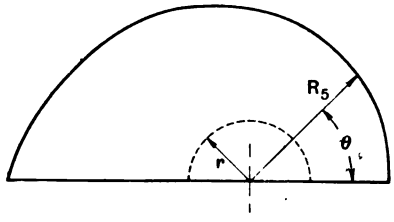

$$R_5 = \left[114.6\left\{\frac{ka_5C_f^2}{\{C_f-(a_5\theta+b_5)\}^2}+K\right\}\right]^{\frac{1}{2}}$$

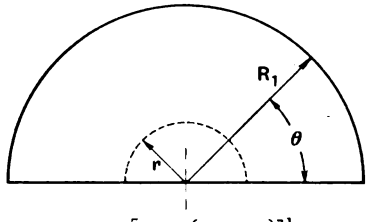

$$R_1 = [114.6\{ka_1+K\}]^{\frac{1}{2}}$$

Fig. 10.

Plate Shape for Corrected Square Law of Capacity (with series fixed capacity).

The same method may be employed to design a plate to give a uniform *wavelength* scale to a series variable condenser.

Employing similar notation to that of the previous case the resultant capacity of the variable and fixed capacities in series will have to be such that :—

$$C_R = (a\theta + b)^2 \quad .. \quad .. \quad (36)$$

and

$$C = \frac{C_f C_R}{C_f - C_R}$$

$$\therefore \quad C_6 = \frac{C_f(a_6\theta + b_6)^2}{C_f - (a_6\theta + b_6)^2} \quad .. \quad (37)$$

as before, when $\theta = 0$, C_6 = Residual capacity,

$$\therefore \quad \text{Residual capacity} = \frac{C_f b_6^2}{C_f - b_6^2}$$

from which the constant

$$b_6 = \sqrt{\frac{C_f\,(\text{Residual capacity})}{C_f + \text{Residual capacity}}} \quad (38)$$

and when $\theta = 180$, C_6 = Maximum capacity,

$$\therefore \quad \text{Maximum capacity} = \frac{C_f(180a_6 + b_6)^2}{C_f - (180a_6 + b_6)^2}$$

from which the constant

$$a_6 = \frac{1}{180}\left\{\sqrt{\frac{C_f\,(\text{Max. cap.})}{C_f + \text{Max. cap.}}} - b_6\right\} \quad (39)$$

As in the previous case, the capacity due to the actual operative plate area is equal to C_6—Residual Capacity. Therefore, from (37) the area of the plate in operation at any angle θ will be given by :—

$$A_6 = k\left\{\frac{C_f(a_6\theta + b_6)^2}{C_f - (a_6\theta + b_6)^2} - \text{Res. cap.}\right\} + K\theta \quad (40)$$

the term $K\theta$ being added to compensate for the inoperative centre portion of the plate as in the previous case.

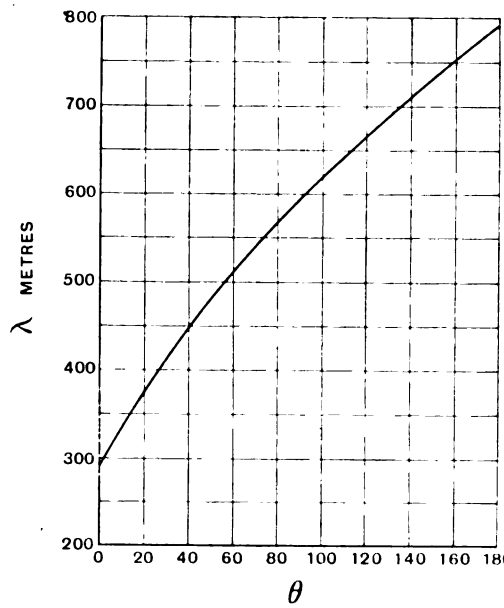

Fig. 11. (*See also Figs.* 14, 17 *and* 20.)

The area constants k and K have the same values as in all previous cases.

As before, the plate radii are found from the expression

$$R_6 = \sqrt{114.6\,\frac{dA_6}{d\theta}}$$

$$A_6 = k\left\{\frac{C_f(a_6\theta + b_6)^2}{C_f - (a_6\theta + b_6)^2} - \text{Res. cap.}\right\} + K\theta$$

Digitized by Google

$\therefore \quad \frac{dA_6}{d\theta}$ (for the whole area expression)

$$= \frac{2ka_6C_f^2(a_6\theta + b_6)}{\{C_f - (a_6\theta + b_6)^2\}^2} + K \qquad (41)$$

Therefore the radius of the *resultant* uniform wavelength variation plate at any angle θ is given by :—

$$R_6 = \left[114.6\left\{\frac{2ka_6C_f^2(a_6\theta + b_6)}{\{C_f - (a_6\theta + b_6)^2\}^2} + K\right\}\right]^{\frac{1}{2}} \qquad (42)$$

Radii are quite quickly calculated from this expression and as an example a plate having the same total area as before and for the same values of maximum and residual capacity has been calculated for use with the same value of series fixed capacity.

Maximum capacity $= 500\mu\mu F.$
Augmented residual capacity $= 36\mu\mu F.$
Series fixed capacity $= 500\mu\mu F.$
Total plate area $= 20$ square cms.
$r = 1.2$ cms.

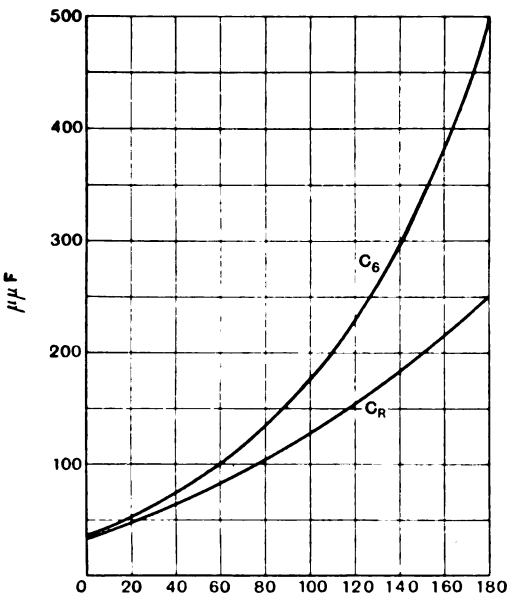

$$C_6 = \frac{C_f(a_6\theta + b_6)^2}{C_f - (a_6\theta + b_6)^2}$$

Fig. 12.

The capacity curve C_6 for the variable condenser calculated from (37) is given in Fig. 12 together with the curve of resultant capacity (C_R) of the two condensers in series from (36).

The tabulation below gives the radii (R_6) of the required plate calculated from (42) and Fig. 13 shows the plate shape drawn using these radii together with an *ordinary* corrected square law plate for comparison. Fig. 14 gives the wavelength curve $\lambda = 50\sqrt{C_R}$ for this condenser for comparison with those of Fig. 8 for an *ordinary* semicircular plate condenser and Fig. 11 for a straight line law of resultant *capacity* condenser.

θ deg.	R_6 (cms.)
0	2.16
20	2.35
40	2.56
60	2.78
100	3.37
140	4.25
160	4.85
180	5.06

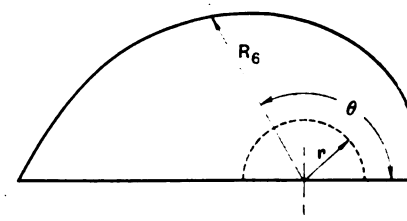

$$R_6 = \left[114.6\left\{\frac{2ka_6C_f^2(a_6\theta + b_6)}{\{C_f - (a_6\theta + b_6)^2\}^2} + K\right\}\right]^{\frac{1}{2}}$$

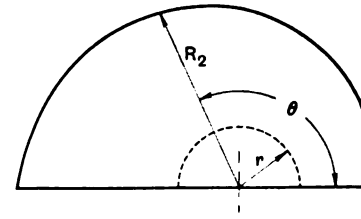

$$R_2 = [114.6\{2ka_2(a_2\theta + b_2) + K\}]^{\frac{1}{2}}$$

Fig. 13.

Plate Shape for Inverse Square Law of Capacity (with series fixed capacity).

Employing the same notation for actual variable condenser capacity, fixed series capacity and resultant capacity, it may be stated that in order to obtain a uniform scale of *frequency*

$$C_R = \frac{1}{(a\theta + b)^2} \qquad .. \qquad (43)$$

and

$$C = \frac{C_fC_R}{C_f - C_R}$$

Digitized by Google

$$\therefore \quad C_7 = \frac{C_f/(a_7\theta+b_7)^2}{C_f-[1/(a_7\theta+b_7)^2]}$$

$$= \frac{C_f}{C_f(a_7\theta+b_7)^2-1} \quad .. \quad (44)$$

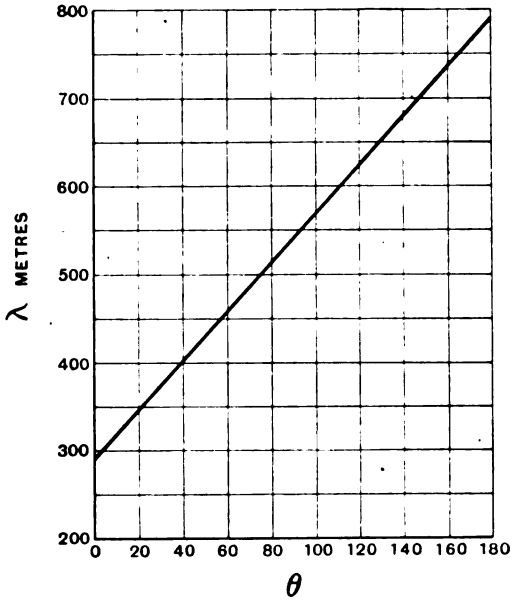

Fig. 14. (*See also Figs.* 11, 17 *and* 20.)

The values of the constants a_7 and b_7 may be found from a knowledge of the values of the maximum and augmented residual capacities of the variable condenser and the value of the series fixed capacity.

When $\theta=0$, C_7 must be the maximum capacity

$$\therefore \quad \text{Maximum capacity} = \frac{C_f}{C_f b_7^2-1}$$

from which :—

$$b_7 = \sqrt{\frac{1}{\text{Maximum capacity}} + \frac{1}{C_f}} \quad (45)$$

and when $\theta=180$, C_7 must be the augmented residual capacity.

$$\therefore \quad \text{Residual capacity} = \frac{C_f}{C_f(180a_7+b_7)^2-1}$$

from which :—

$$a_7 = \frac{1}{180}\left\{\left(\frac{1}{\text{Res. cap.}} + \frac{1}{C_f}\right)^{\frac{1}{2}} - b_7\right\} \quad (46)$$

As in the previous cases the part of C_7 which is due to the operative plate area, is C_7—Residual capacity, and therefore the plate area in operation at any angle θ must, from (44), be :—

$$A_7 = k\left\{\frac{C_f}{C_f(a_7\theta+b_7)^2-1} - \text{Res. cap.}\right\} + K(180-\theta) \quad .. \quad (47)$$

in this case the term to be added to compensate for loss of active area round the condenser spindle being, for obvious reasons, $K(180-\theta)$.

The constants k and K have the same values as previously, they are, in fact, unaffected by the law of the plate.

$$\frac{dA_7}{d\theta} = -\left[\frac{2a_7kC_f^2(a_7\theta+b_7)}{\{C_f(a_7\theta+b_7)^2-1\}^2} + K\right] \quad (48)$$

Therefore

$$R_7 = \left[114.6\left\{\frac{2a_7kC_f^2(a_7\theta+b_7)}{\{C_f(a_7\theta+b_7)^2-1\}^2} + K\right\}\right]^{\frac{1}{2}}. \quad (49)$$

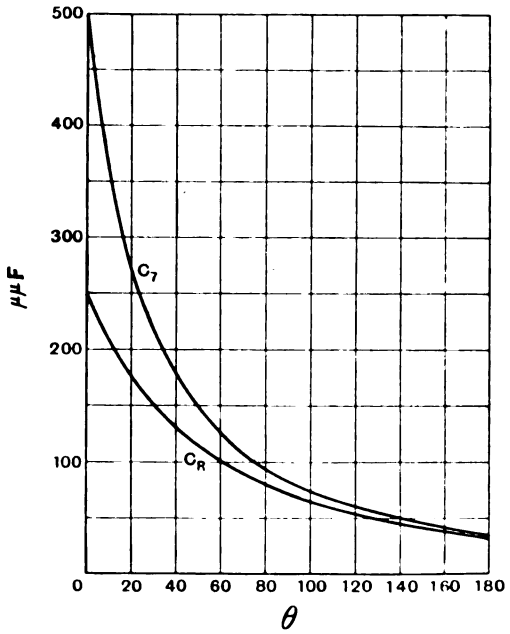

$$C_7 = \frac{C_f}{C_f(a_7\theta+b_7)^2-1}$$

Fig. 15.

Digitized by Google

The minus sign obtained when differentiating merely indicates that the area is decreasing with increasing values of θ and can be ignored in forming the expression for R_7.

To facilitate comparison with the previously designed plates, the plate radii have been computed using the above formula (49) from the same data as before.

Maximum capacity	$=500\mu\mu$F.
Augmented residual capacity	$= 36\mu\mu$F.
Series fixed capacity	$=500\mu\mu$F.
Total plate area	= 20 square cms.
r	= 1.2 cms.

The capacity curve C_7 for the variable condenser of this example, calculated from (44), is given in Fig. 15 which also gives the curve of resultant capacity, C_R, of the two condensers in series from (43).

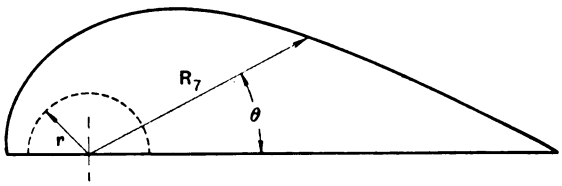

$$R_7 = \left[114.6\left\{\frac{2a_7kC_f^2(a_7\theta+b_7)}{\{C_f(a_7\theta+b_7)^2-1\}^2}+K\right\}\right]^{\frac{1}{2}}$$

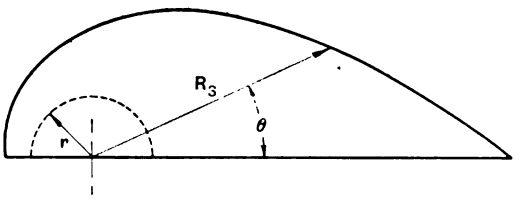

$$R_3 = \left[114.6\left\{\frac{2ka_3}{(a_3\theta+b_3)^3}+K\right\}\right]^{\frac{1}{2}}$$

Fig. 16.

θ deg.	R_7 (cms.)
0	9.25
10	6.95
20	5.57
30	4.65
60	3.32
90	2.42
120	2.02
150	1.78
180	1.62

The tabulation here gives the radii (R_7) of the required plate calculated from (49) and Fig. 16 is a scale drawing of the plate shaped by these radii together with an *ordinary* inverse square law plate (when $C_f = \infty$) for comparison.

Fig. 17 gives the frequency curve

$$f = \frac{3 \times 10^8}{50\sqrt{C_R}}$$

for this condenser for comparison with those of Figs. 8, 11 and 14 obtained with condensers having other plate *shapes*, although of the same *area* and, therefore, of the same total capacity *and* capacity range.

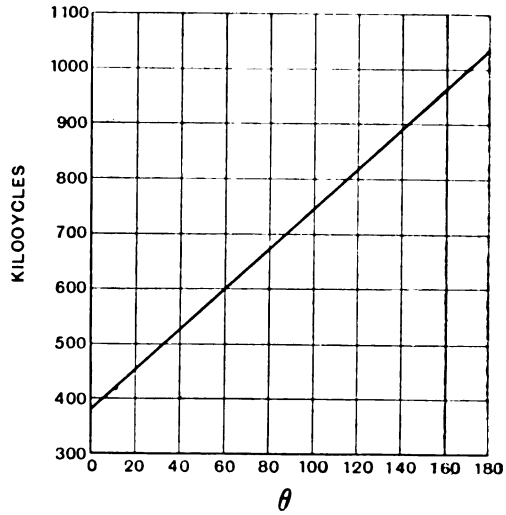

Fig. 17. (*See also Figs.* 11, 14, *and* 20.)

Exponential Law of Capacity (with series fixed Capacity).

The fourth type of condenser remaining to be treated in this manner is that which gives a uniform *percentage* change of wavelength or frequency throughout its entire scale. This type of condenser has already been fully explained by the author in a previous article and a plate shape formula given. If such a law is, however, to be satisfied by a variable condenser while in series with another capacity of fixed value the resultant capacity C_R of the two condensers in series must follow the exponential law :—

$$C_R = a\varepsilon^{b\theta} \quad .. \quad .. \quad (50)$$

and

$$C = \frac{C_f C_R}{C_f - C_R}$$

$$\therefore \quad C_s = \frac{C_f a_s \varepsilon^{b_s\theta}}{C_f - a_s\varepsilon^{b_s\theta}} \quad .. \quad (51)$$

When $\theta = 0$, C_s = Residual capacity.

Digitized by Google

$$\therefore \quad \text{Residual capacity} = \frac{C_f a_8}{C_f - a_8}$$

from which

$$a_8 = \frac{C_f(\text{Residual capacity})}{C_f + \text{Residual capacity}} \qquad (52)$$

and when $\theta = 180$, $C_8 =$ Maximum capacity.

$$\therefore \quad \text{Max. cap.} = \frac{C_f a_8 \varepsilon^{180 b_8}}{C_f - a_8 \varepsilon^{180 b_8}}$$

from which

$$a_8 \varepsilon^{180 b_8} = \frac{C_f(\text{Maximum capacity})}{C_f + \text{Maximum capacity}}$$

and, equating logarithms,

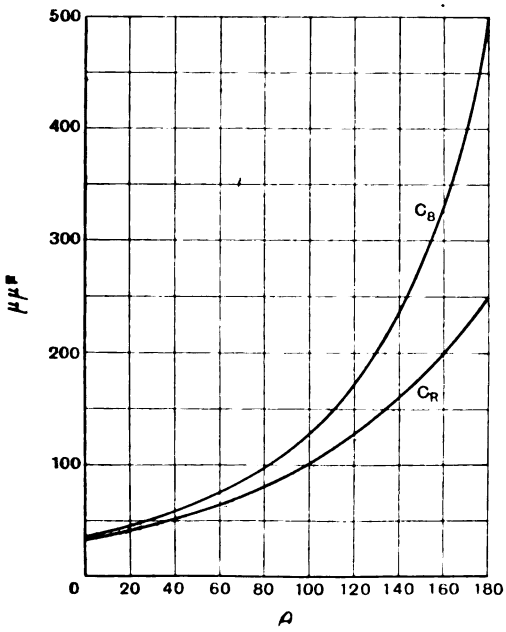

$$C_8 = \frac{C_f a_8 \varepsilon^{b_8 \theta}}{C_f - a_8 \varepsilon^{b_8 \theta}}$$

Fig. 18.

$$\log a_8 + 180 b_8 \log \varepsilon = \log \left\{ \frac{C_f\ (\text{Max. capacity})}{C_f + \text{Max. capacity}} \right\}$$

$$\therefore \quad b_8 = \frac{1}{78.174} \left[\log \left\{ \frac{C_f(\text{Max. cap.})}{C_f + \text{Max. cap.}} \right\} - \log a \right] \qquad (53)$$

The expression for plate area in operation at any angle θ may now be formed directly from (51)

$$A_8 = k \left\{ \frac{C_f a_8 \varepsilon^{b_8 \theta}}{C_f - a_8 \varepsilon^{b_8 \theta}} - \text{Res. cap.} \right\} + K\theta \qquad (54)$$

$$\therefore \quad \frac{dA_8}{d\theta} = \frac{k C_f^2 a_8 b_8 \varepsilon^{b_8 \theta}}{(C_f - a_8 \varepsilon^{b_8 \theta})^2} + K \qquad (55)$$

Therefore

$$R_8 = \left[114.6 \left\{ \frac{k C_f^2 a_8 b_8 \varepsilon^{b_8 \theta}}{(C_f - a_8 \varepsilon^{b_8 \theta})^2} + K \right\} \right]^{\frac{1}{2}} \qquad (56)$$

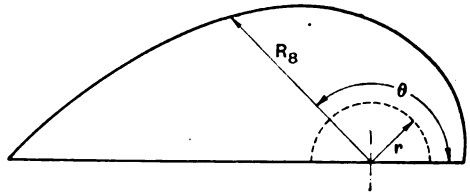

$$R_8 = \left[114.6 \left\{ \frac{k C_f^2 a_8 b_8 \varepsilon^{b_8 \theta}}{(C_f - a_8 \varepsilon^{b_8 \theta})^2} + K \right\} \right]^{\frac{1}{2}}$$

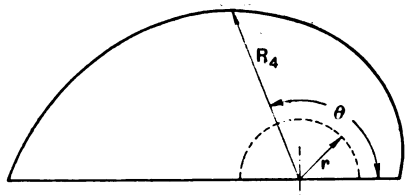

$$R_4 = [114.6\{k a_4 b_4 \varepsilon^{b_4 \theta} + K\}]^{\frac{1}{2}}$$

Fig. 19.

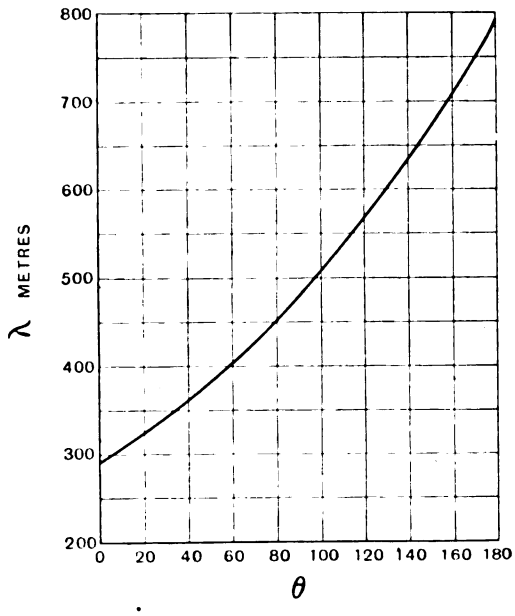

Fig. 20.

(*See also Figs.* 11, 14, *and* 17).

Digitized by Google

With the same data as before, an example of this plate shape has been calculated and the results given in the capacity curves of Fig. 18 and in the actual scale drawing of Fig. 19 (R_8).

θ deg.	R (cms.)
0	1.82
20	1.96
40	2.15
60	2.38
90	2.85
120	3.57
150	4.74
180	7.16

The radii, calculated from formula (56), which were used in drawing this plate shape, are tabulated here and the curve of wavelength plotted against degree scale reading obtained, when using a condenser having plates of this shape, is given in Fig. 20.

Effect of Varying the Value of Series Capacity.

A variation of the ratio of series capacity to variable condenser capacity has, of course, a very marked effect upon the plate shape, and, since all the design examples have been

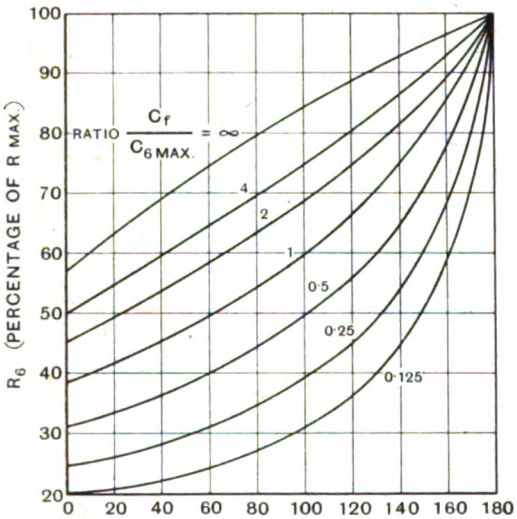

Fig. 21.

taken with this ratio equal to unity it will, perhaps, be desirable to illustrate, by means of the curves of Fig. 21, the extent of this plate shape variation. In this figure are plotted curves showing the relation between R_6 and θ for corrected square law plates of a variable condenser having the same values and plate *area* as before but designed to be "law-suited" to various values of series capacity, C_f, infinity, 2,000, 1,000, 500, 250, 125 and 62.5F$\mu\mu$.

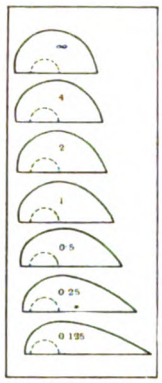

Fig. 22.

The radii are given as *percentages* of the maximum radius (at 180 degrees) as this latter dimension usually determines the permissible plate area. The actual plate shapes corresponding with these curves are given in Fig. 22.

Conclusion.

In conclusion it is thought that a summary of the formulæ and their constants will prove useful and these have therefore been tabulated overleaf in a form which facilitates comparison not only between the laws given in this article but also with those of the previous article.

It should be remembered that if the value of the series fixed capacity has not been predetermined or estimated with accuracy (as may, for instance, be the case in an aerial series tuning circuit) its effective value, if too large, may be suited to the law of the special condenser by the adjustment of a large capacity variable condenser in series with the latter. Also, if the residual capacity of a variable condenser designed to suit any particular law, is, in practice, found to be slightly lower than its estimated value, a small variable condenser of simple design may be paralleled with it and adjusted until the law is exactly satisfied.

It will be seen, therefore, that, if the estimation of the values of the fixed series capacity and the residual capacity of the variable unit cannot be made exactly, it is better to under estimate deliberately the former and over estimate the latter so as to render these law satisfying adjustments possible.

Digitized by Google

TABLE GIVING A SUMMARY OF FORMULÆ AND THEIR CONSTANTS.

Plate design for constant capacity change (with series capacity).

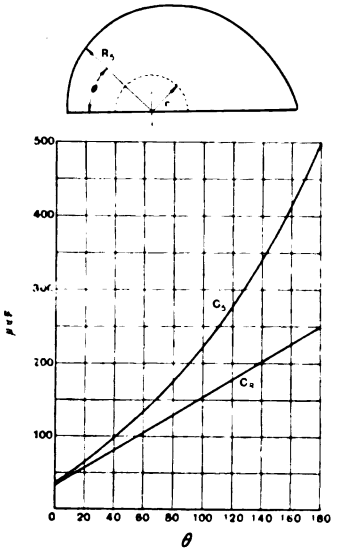

$$C_5 = \frac{C_f(a_5\theta + b_5)}{C_f - (a_5\theta + b_5)} \quad .. \quad (28)$$

$$A_5 = k\left\{\frac{C_f(a_5\theta + b_5)}{C_f - (a_5\theta + b_5)} - \text{Res. cap.}\right\} + K\theta \quad (32)$$

$$R_5 = \left[114.6\left\{\frac{ka_5C_f^2}{\{C_f - (a_5\theta + b_5)\}^2} + K\right\}\right]^{\frac{1}{2}} \quad (35)$$

Constants—

$$a_5 = \frac{1}{180}\left\{\frac{C_f(\text{Max. cap.})}{C_f + \text{Max. cap.}} - b_5\right\} \quad (30)$$

$$b_5 = \frac{C_f\,(\text{Residual capacity})}{C_f + \text{Residual capacity}} \quad .. \quad (29)$$

Plate design for constant wave-length change (with series capacity).

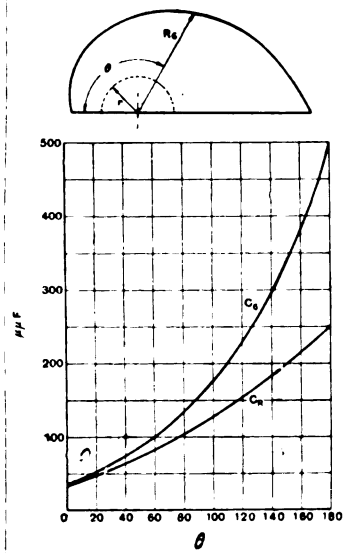

$$C_6 = \frac{C_f(a_6\theta + b_6)^2}{C_f - (a_6\theta + b_6)^2} \quad .. \quad (37)$$

$$A_6 = k\left\{\frac{C_f(a_6\theta + b_6)^2}{C_f - (a_6\theta + b_6)^2} - \text{Res. cap.}\right\} + K\theta \quad (40)$$

$$R_6 = \left[114.6\left\{\frac{2ka_6C_f^2(a_6\theta + b_6)}{\{C_f - (a_6\theta + b_6)^2\}^2} + K\right\}\right]^{\frac{1}{2}} \quad (42)$$

Constants—

$$a_6 = \frac{1}{180}\left\{\sqrt{\frac{C_f\,(\text{Max. cap.})}{C_f + \text{Max. cap.}}} - b_6\right\} \quad (39)$$

$$b_6 = \sqrt{\frac{C_f\,(\text{Residual capacity})}{C_f + \text{Residual capacity}}} \quad (38)$$

Plate design for constant frequency change (with series capacity).

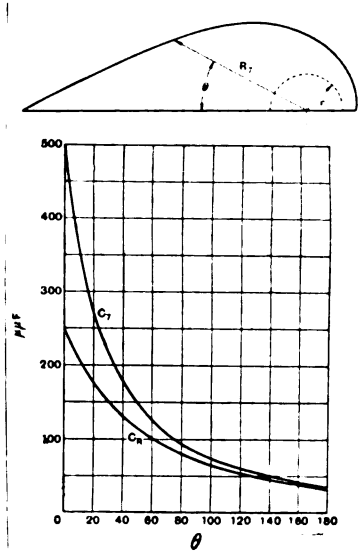

$$C_7 = \frac{C_f}{C_f(a_7\theta + b_7)^2 - 1} \quad .. \quad (44)$$

$$A_7 = k\left\{\frac{C_f}{C_f(a_7\theta + b_7)^2 - 1} - \text{Res. cap.}\right\} + K(180 - \theta) \quad .. \quad (47)$$

$$R_7 = \left[114.6\left\{\frac{2a_7kC_f^2(a_7\theta + b_7)}{\{C_f(a_7\theta + b_7)^2 - 1\}^2} + K\right\}\right]^{\frac{1}{2}} \quad (49)$$

Constants—

$$a_7 = \frac{1}{180}\left\{\left(\frac{1}{\text{Res. cap.}} + \frac{1}{C_f}\right)^{\frac{1}{2}} - b_7\right\} \quad (46)$$

$$b_7 = \sqrt{\frac{1}{\text{Maximum capacity}} + \frac{1}{C_f}} \quad (45)$$

Plate design for constant percentage change of wavelength or frequency (with series capacity).

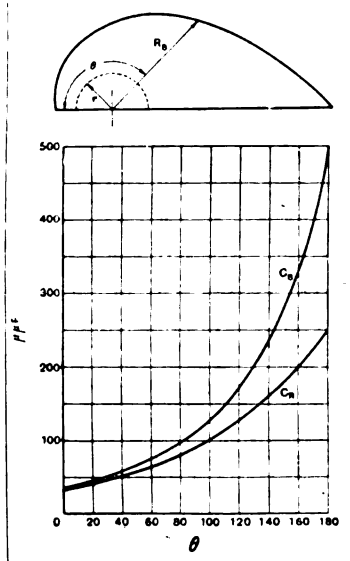

$$C_8 = \frac{C_f a_8 e^{b_8\theta}}{C_f - a_8 e^{b_8\theta}} \quad .. \quad (52)$$

$$A_8 = k\left\{\frac{C_f a_8 e^{b_8\theta}}{C_f - a_8 e^{b_8\theta}} - \text{Res. cap.}\right\} + K\theta \quad (54)$$

$$R_8 = \left[114.6\left\{\frac{kC_f^2 a_8 b_8 e^{b_8\theta}}{(C_f - a_8 e^{b_8\theta})^2} + K\right\}\right]^{\frac{1}{2}} \quad (56)$$

Constants—

$$a_8 = \frac{C_f\,(\text{Residual capacity})}{C_f + \text{Residual capacity}} \quad (52)$$

$$b_8 = \frac{1}{78.174}\left[\log\left\{\frac{C_f\,(\text{Max. cap.})}{C_f + \text{Max. cap.}}\right\} - \log a\right] \quad (53)$$

COMMON CONSTANTS :—

$$k = \frac{\text{Total plate area} - 180K}{\text{Max. capacity} - \text{Res. capacity}}$$

$$K = \frac{r^2}{114.6}$$

Digitized by Google

Mathematics for Wireless Amateurs.

By F. M. Colebrook, B.Sc., A.C.G.I., D.I.C. **[510**

(*Continued from page* 680 *of November issue.*)

6. The Solution of Equations.

(A5) (*continued*). *The General Equation of the nth Degree.*

As stated in the preceding instalment, the most general form of the equation of the nth degree in one unknown quantity is

$$ax^n + bx^{n-1} + cx^{n-2} + dx^{n-3} + etc., etc. + k = 0$$

where the coefficients a, b, c, etc., can have any sign and any numerical value. First let us see how such a number as that on the left-hand side of this equation can be built up. By multiplying together n simple numbers of the form $x-\alpha$, $x-\beta$, $x-\gamma$, etc., it can be shown that

$$\begin{aligned}&(x-\alpha)\ (x-\beta)\ (x-\gamma), \text{ etc. . . . } n \text{ factors}\\ &= x^n - (\alpha+\beta+\gamma+\ .\ .\ .\ )x^{n-1}\\ &\quad + (\alpha\beta+\beta\gamma+\gamma\delta+\ .\ .\ .\ )\ x^{n-2}\\ &\quad - (\alpha\beta\gamma+\beta\gamma\delta+\ .\ .\ .\ )x^{n-3}, \text{ etc. . . .}\\ &\qquad (-1)^n(\alpha\beta\gamma\delta\ .\ .\ .)\end{aligned}$$

the coefficient of x^{n-1} consisting of minus the sum of all the α, β numbers, that of x^{n-2} being plus the sum of all the products two at a time of the α, β numbers, and so on. The coefficient of x^0 (*i.e.*, the constant term not containing x) will be the sum of all the products n at a time, *i.e.*, the product of all the α,β numbers, and its sign will be plus if n is even and minus if n is odd, which fact is conveniently expressed by the factor $(-1)^n$. The reader can easily confirm this general formula by multiplying two, then three, then four, simple factors together and arranging the product in each case in the above manner. For shortness, put

$$\begin{aligned}(\alpha+\beta+\gamma+\delta+\ .\ .\ .\ ) &= -b/a\\ (\alpha\beta+\beta\gamma+\gamma\delta+\ .\ .\ .\ ) &= c/a\\ &\text{etc., etc.,}\\ (\alpha\beta\gamma\delta\ .\ .\ .\ ) &= (-1)^n k/a\end{aligned}$$

Then

$$\begin{aligned}&(x-\alpha)\ (x-\beta)\ (x-\gamma) \text{ etc. . . . } n \text{ factors}\\ &= x^n + (b/a)x^{n-1} + (c/a)x^{n-2}, \text{ etc . . . } k/a\end{aligned}$$

and multiplying each of these equal numbers by a will give

$$\begin{aligned}&a(x-\alpha)\ (x-\beta)\ (x-\gamma)\ .\ .\ .\ n \text{ factors}\\ &= ax^n + bx^{n-1} + cx^{n-2} + dx^{n-3}, \text{ etc. . . . } k.\end{aligned}$$

The above complicated number of the nth degree in x can therefore be expressed as the product of n simple numbers of the form $x-\alpha$, and the general equation can be written

$$\begin{aligned}&ax^n + bx^{n-1} + cx^{n-2} + dx^{n-3}, \text{ etc. . . . } k\\ &= a(x-\alpha)\ (x-\beta)\ (x-\gamma)\ .\ .\ .\ n \text{ factors} = 0.\end{aligned}$$

As already explained, the equation will be satisfied when any of the individual factors are zero, *i.e.*, when $x = \alpha,\beta,\gamma$, etc. The numbers α,β,γ, etc., are therefore the roots of the equation. Thus to solve the general equation of the nth degree, it is only necessary to break it up into its n simple factors; but this is easier said than done. In fact, generally speaking, it cannot be done. The only general method of solution is the graphical one already described, and even that is not much use from a theoretical point of view. Suppose x, for instance, represents the resonant frequencies of some coupled circuits, the coefficients of the equation being the electrical constants of the circuits. What one usually wants to know in such a case is the way the roots depend on the coefficients, *i.e.*, one wants x explicitly in terms of a, b, c, etc., and the graphical method will only give the solutions for particular numerical cases in a form in which the individual coefficients have quite lost their identity.

However, certain general conclusions of some practical value can be drawn from the above discussion. The most important of these is that the general equation of the nth degree has n roots. Actually the above discussion only shows that an equation with n roots will be of the nth degree, but the converse is also true, though a rigid proof is rather beyond the scope of the present

Digitized by Google

series. The roots will not necessarily be all different. For instance, the roots of

$$x^2 - 4x + 4 = 0$$

are 2, 2, since $x^2-4x+4=(x-2)\ (x-2)$. This shows that the curve $y=x^2-4x+4$ cuts the x axis in two coincident points. If the left-hand curve in Fig. 11 (November issue) is moved up in the positive direction of the y axis the points in which it cuts the x axis will obviously come closer and closer together and will eventually coincide. In such a case the curve is said to touch the line tangentially.

Again, the roots will not necessarily be all real. If the upward movement of the curve referred to above is continued beyond the position in which it just touches the x axis, the curve will not cut the x axis at all. The corresponding quadratic equation can still be solved, however, but it will be found that b^2-4ac is now negative, so that $\sqrt{b^2-4ac}$ is imaginary, and the roots will be of the form $p+q\sqrt{-1}$, $p-q\sqrt{-1}$, as already explained. The curve represented by the general function may have several such bends, and any of these which do not come down below the x axis will give rise to similar pairs of complex roots of the form $p \pm q\sqrt{-1}$. It can be proved that any complex roots of the general equation will necessarily occur in such pairs, so that if $p+q\sqrt{-1}$ is known to be a root, then $p-q\sqrt{-1}$ must also be a root. The proof will be given later if space permits of a fuller discussion of complex and imaginary quantities, but the above description shows clearly how this fact arises.

The relationships between the roots and the coefficients, *i.e.*, the sum of the roots equals $-b/a$, etc., etc., may sometimes be of practical value even though the roots cannot be determined, and should therefore be noted.

The expression of the general function as the product of the root factors shows that if one root of an equation can be found in some way, *e.g.*, by "guesstimation," or by plotting the function over a likely range of values, then the degree of the equation can be lowered by one by dividing by the appropriate factor. (The method of division is illustrated in an appendix.) For instance, take

$$x^3+6x^2-3x-4=0$$

Here the sum of the coefficient is zero, which means that $x=1$ satisfies the equation (for the result of putting $x=1$ is obviously the sum of the coefficients). This means that $(x-1)$ is a factor of the number on the left-hand side, and by division it will be found that

$$x^3+6x^2-3x-4=(x-1)\ \ (x^2+7x+4)=0$$

so that the roots of the equation are 1, together with the roots of the quadratic

$$x^2+7x+4=0$$

which can be found as described above.

An interesting special case of the general equation is

$$x^n-1=0$$

or

$$x^n=1$$

i.e.,

$$x=\sqrt[n]{1}$$

Since this equation must have n roots, we must conclude that there are n nth roots of unity. And so there are. For instance, consider

$$x^4-1=0.$$

Remembering the result already established for the factors of a^2-b^2, *i.e.*,

$$a^2-b^2=(a-b)\ (a+b)$$

the equation can be broken up into factors thus :—

$$x^4-1=(x^2-1)\ \ (x^2+1)$$
$$(x-1)\ (x+1)\ (x-\sqrt{-1})\ (x+\sqrt{-1})=0$$

so that the four fourth roots of unity are ± 1 and $\pm\sqrt{-1}$. The significance of this will be made clear when we come to the interpretation of complex numbers.

A great deal more might be said about the general equation of the nth degree, but it has already taken as much space as can be allowed for it. The important things to remember are that it has n roots, that any complex roots will occur in pairs differing only in the sign of the imaginary part, and that each root gives a factor of the equation.

(B1) *Simultaneous Equations for Two Unknown Numbers.*

It has been shown that, starting with some number represented by the letter x, some other number can be built up out of x and various other constant numbers, represented by a, b, c, etc., the more or less complicated

Digitized by Google

number which results being called a function of x. Similarly one could start with two numbers represented by the letters x and y and build up some other number of more or less complicated structure, the magnitude of which would depend on the magnitudes and signs assigned to x and y. Such a number could then be described as a function of x and y. Using a similar notation, any such number could be written $F(x,y)$. In a given case, for instance, the function might be defined—

$$F(x,y)=ax^2+bxy+cy^2+dx+ey+f$$

which is the most general form for a function of the second degree in x and y (second degree because no term contains more than two x's or y's multiplied together.) In the above case, x and y can be regarded as independent variables, which, between them, fix the value of the function. Suppose, however, that some particular value is assigned to the function, zero, for instance, so that

$$ax^2+bxy+cy^2+dx+ey+f=0$$

then x and y are no longer independent variables, for if any given value is assigned to either, the other must have such a value or values that the sum of all the terms is zero. Obviously in the above case, if some given value is assigned to x, k for instance, we have

$$ak^2+bky+cy^2+dk+ey+f=0$$

which is a quadratic equation for y, so that for any given value of x there will in general be two values of y which will satisfy the original definition. Thus, whatever the form of the function $F(x,y)$, the equation

$$F(x,y)=0$$

can be regarded as defining a relationship between x and y, just as the equation $y=f(x)$ defines more explicitly a relationship between x and y. By means of the graphical method already described the relationship between the numbers x and y defined by $F(x,y)=0$ could be represented by means of a line of more or less complicated shape. For instance, the general expression of the second degree written out above, if plotted for any particular set of values for the coefficients, will always give a curve belonging to one of the three kinds of curve that can be obtained by intersecting a cone and a plane. Such curves are called conic sections. The parabola already referred to is one kind of conic section.

Two such functions of any character

$$F(x,y)=0$$
$$G(x,y)=0$$

plotted on the same diagram would give two lines or curves which would in general intersect one another at various points, as shown, for instance, on Fig. 12. The numbers x and y defined by any such point of intersection, since they satisfy both the functional relationships, are described as solutions of the simultaneous equations.

$$F(x,y)=0$$
$$G(x,y)=0$$

More generally, any corresponding values of x and y, whether real or complex or imaginary, which satisfy both the functional relationships, are called solutions of the simultaneous

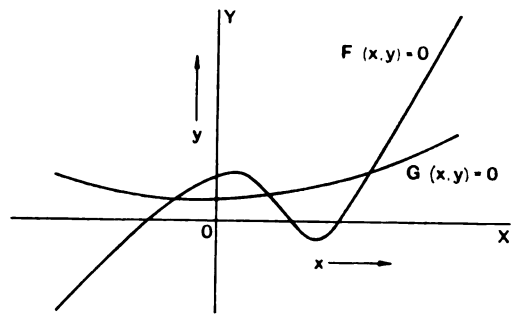

Fig. 12.

equations. Thus a general method for determining the real solutions of such simultaneous equations would be the plotting of both the curves to find the point or points of intersection, though any such graphical method would be very laborious in most cases and would have the disadvantages of lack of generality and restricted accuracy. However, the above discussion of the graphical point of view brings out one very important point. It was found that for one unknown quantity one equation is sufficient. Now it appears that if two unknown quantities have to be determined two equations are required. This suggests—though, of course, it does not actually prove—that *for the determination of any given number of unknown quantities an equal number of independent equations are required.* This is

Digitized by Google

so in fact, though a perfectly general proof is beyond the scope of this series.

Out of the infinite variety of possible forms of simultaneous equations for two unknown numbers a few of the most generally useful types will now be considered.

(B2) *Simultaneous Equations of the First Degree for Two Unknowns.*

This is the simplest case, both equations being rectilinear. As it introduces ideas of wide general utility it will be considered in the general form, though literal (*i.e.* letter) expressions tend to spread themselves out rather and look more fearsome than they are in fact. The general form will be

$$ax+by=c$$
$$dx+ey=f$$

These lines being co-planar (*i.e.*, in one plane) will necessarily intersect at one point only. Even if they are parallel? Yes, for parallel lines intersect at infinity, which is only another way of saying that there is no sudden and catastrophic difference between lines which are very nearly parallel and lines which are quite parallel.

The important thing to realise about simultaneous equations is that although in general the x's and y's of the two equations are quite different and have nothing to do with each other, the x's and y's corresponding to a simultaneous solution, *i.e.*, to a point of intersection, are of necessity the same for both equations and can therefore be combined together without making any distinction between them.

The first thing to do is to make one of the unknowns, y for instance, appear in the same way in each equation. If the first equation is multiplied by the co-efficient of y in the second and *vice versa*, this result is obtained right away, for we have

$$eax+eby=ec$$
$$bdx+bey=bf$$

Since the x's and y's in each equation are the same as far as the point of intersection is concerned, the equations can be subtracted from each other, giving

$$eax+eby-bdx-bey=ec-bf.$$

Remember that this derived equation is only true for x, y numbers which satisfy *both* the original equations.

From this equation $(ea-bd)\,x=ec-bf$ so that

$$x=\frac{ec-bf}{ea-bd}$$

Now the point having this x co-ordinate lies on both lines. The corresponding y co-ordinate can therefore be found by putting this value for x in either of the original equations. Since, from the first,

$$y=-\frac{a}{b}x+\frac{c}{b}$$

then for the particular value of x above,

$$y=-\frac{a}{b}\,\frac{ec-bf}{ea-bd}+\frac{c}{b}$$

This expression for y can be simplified as already shown in connection with the manipulation of fractions and will give the result

$$y=\frac{af-cd}{ae-bd}$$

Alternatively, of course, the solution for y could be found by the same process as that used for the determination of x, and in some cases this might be preferable.

To take a simple numerical example of the general method

$$2x+3y=4$$
$$7x+8y=9$$
$$16x+24y=32$$
$$21x+24y=27$$

and subtracting the second from the first

$$-5x=5$$

$\therefore$ $$x=-1$$

Putting this value for x in the first equation gives

$$-2+3y=4$$

i.e., $$3y=6$$

therefore $$y=2$$

It will be found that these values for x and y will satisfy the second equation, which checks the accuracy of the solution.

(B2*a*) *The Special Case of Parallel Lines. The Meaning of "Infinity."*

Suppose co-efficients of the general equations are such that

$$a/d=b/e$$

i.e., $$ae-bd=0$$

Then the solution for x becomes

$$x=\frac{ce-bf}{ae-bd}=\frac{ce-bf}{0}$$

Digitized by Google

Now we have already encountered the group $a/0$ (page 497, August issue), and decided that it was something to which the ordinary laws of mathematics could not be applied without disastrous results. However, some rather more definite ideas on the subject must be introduced at this point, or the above equations will be left without a reasonable solution. Instead of jumping right over the precipice let us walk slowly up to the edge and look over, a very sensible proceeding which is frequently adopted in mathematics when there seems to be trouble ahead. Consider the group a/h, where h is a number which can be made smaller and smaller indefinitely. If

$$h=1/1{,}000 \qquad a/h=1{,}000a$$
$$h=1/10{,}000 \qquad a/h=10{,}000a$$
$$h=1/100{,}000 \qquad a/h=100{,}000a$$

As h is made numerically smaller and smaller, a/h becomes numerically larger and larger. By making h sufficiently small, a/h can be made larger than any number we can name, however large it may be. This is expressed mathematically by saying that the limit of a/h when h tends to zero is infinity—not a very consistent form of expression perhaps, because infinity means without limit, greater than any limited number. In symbols the idea is written

$$\underset{h\to 0}{Lt.}\ a/h=\infty$$

The important thing to remember is that ∞ is *not* a number, and almost anything is rather more than likely to happen if it is treated as a number.

In the above case therefore, the solution for x is infinity. For instance, if

$$3x+4y=5$$
$$21x+28y=4,$$

the solution for x is

$$x=(140-16)/(84-84)=\infty$$

and for y $\quad y=(105-12)/(84-84)=\infty$

If these lines are actually plotted on a cartesian diagram, it will be found that they are parallel. This is what is meant by saying that parallel lines meet and intersect at infinity.

(B3) *An Electrical Application.*

Now, in case the more experimentally minded reader is beginning to lose interest in x's and y's and the like, it will be well to apply the above to the solution of a simple D.C. circuit problem on the basis of Kirchhoff's Laws. For the circuit shown in Fig. 13 the summation of the potential differences will give

$$(i_1-i_2)R_1=e$$
$$(i_2-i_1)\ R_1+R_2i_2=0$$

i.e.,

$$i_1-i_2=e/R_1$$
$$R_1i_1-(R_1+R_2)i_2=0$$

The solution for i_1 is

$$i_1=\frac{e(R_1+R_2)/R_1}{(R_1+R_2)-R_1}$$

which can be rearranged to give

$$i_1=\left(\frac{1}{R_1}+\frac{1}{R_2}\right)e$$

i.e.,

$$i_1=\frac{e}{R}$$

where

$$\frac{1}{R}=\frac{1}{R_1}+\frac{1}{R_2}$$

The solution of the simultaneous equations

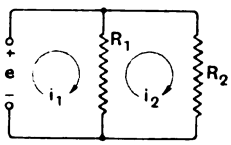

Fig. 13.

given above is therefore one way, though not the shortest, of arriving at the well-known expression for the resistance of two resistances in parallel.

(B.4) *Simultaneous Equations for Two Unknowns. One Equation Linear.*

This comes next in order of complexity to the case of two linear equations. The method of solution in this case is fairly obvious and will be best described by means of a practical example. Suppose

$$4x+2y=5$$

and

$$3x^2-4xy-4y^2=0$$

are given as the two equations. The first is a straight line and the second a conic. In general a straight line will cut a conic in two points, but of course these points may be

Digitized by Google

imaginary and in some cases either or both may be at infinity. That, however, is by the way, and only indicates that there will be two solutions, *i.e.*, two pairs of values of x and of y, for the above equations. From the first equation we can find the value of y in terms of x, *i.e.*,

$$y=(5-4x)/2$$

and since at any points of intersection the x's and y's will be the same in the two equations, this value of y can be substituted in the second equation, *i.e.*,

$$3x^2-\frac{4x(5-4x)}{2}-\frac{4(5-4x)^2}{4}=0$$

which can be simplified to

$$-5(x^2-6x+5)=0$$

i.e., $$-5(x-5)\ (x-1)=0$$

whence $$x=1 \text{ or } 5$$

From the linear equation, if

$$x=1,\ y=(5-4\times 1)/2=\tfrac{1}{2}$$

and if

$$x=5,\ y=(5-4\times 5)/2=-7\tfrac{1}{2}.$$

The solutions are therefore

$$\left.\begin{matrix}x=1\\ y=\frac{1}{2}\end{matrix}\right\}\qquad \left.\begin{matrix}x=5\\ y=-7\frac{1}{2}\end{matrix}\right\}$$

In general terms, the value of y in terms of x, as determined from the linear equation, is substituted in the other equation which then becomes an equation in one unknown only, and if this latter equation can be solved the simultaneous solutions are easily obtained as shown.

(B5) *Simultaneous Equations for Two Unknowns. Both of Second Degree.*

In this case each equation will in general represent a conic. Two conics will intersect in four points, so that four solutions will have to be obtained, and in the perfectly general case the determination of the solutions will require the solving of a fourth power equation, which cannot always be done. There are, however, two special cases in which the solution presents no difficulty, and these will now be described very briefly. If one of the equations is homogeneous of the second degree, *i.e.*, contains only terms of the second degree (x^2, y^2, or xy), for instance,—

$$y^2-11xy+24x^2=0$$

then dividing this equation by x^2 will give

$$(y/x)^2-11(y/x)+24=0$$

which reduces it to a quadratic in y/x. This can be solved either by inspection or by the formula. In the given case we have by inspection

$$\{(y/x)-3\}\ \{(y/x)-8\}=0$$

so that $$y=3x \quad \text{or } y=8x.$$

These values for y substituted in the other equation will reduce it to a simple quadratic in x which can be solved in the ordinary way.

Again, if terms of the first degree are absent from *both* equations, as in

$$2x^2+3xy+4y^2=2$$
$$5x^2+2xy+2y^2=7$$

then out of these two equations a homogeneous equation can be constructed. Multiplying the first by the constant term of the second and the second by the constant term of the first and then subtracting,

$$14x^2+21xy+28y^2=14$$
$$10x^2+\ 4xy+\ 4y^2=14$$
$$4x^2+17xy+24y^2=0$$

and from this point the solution proceeds exactly as in the previous case.

The subject of simultaneous equations for two unknowns is obviously capable of almost indefinite expansion, but most of the cases which permit of simple solution belong to one or other of the types considered above. A little practice and experience will soon enable one to judge whether any given equations are solvable or not. As an instance an unsolvable pair is included in the examples given below.

Equations having more than two unknown numbers are very frequently met with in electrical theory, such equations being obtained from the application of Kirchhoff's Laws to more or less complicated current networks. Some brief account of the way of dealing with such equations will therefore be given in the next instalment.

Appendix. Division in Algebra.

The division of one more or less complex group of symbols by another in algebra is carried out in very much the same way as the ordinary process of long division in

Digitized by Google

arithmetic. It can be illustrated by the case which arises in the text.

$$
\begin{array}{l}
x-1)\ x^3+6x^2-3x-4\ (x^2+7x+4 \\
\quad\ \ x^3-x^2 \\
\quad\ \ \overline{} \\
\qquad 7x^2-3x \\
\qquad 7x^2-7x \\
\qquad \overline{} \\
\qquad\qquad 4x-4 \\
\qquad\qquad 4x-4 \\
\qquad\qquad \overline{\overline{}}
\end{array}
$$

If it is remembered that any ordinary number of several digits is really the sum of various multiples of powers of ten, *e.g.*,

$$4352=4\times10^3+3\times10^2+5\times10+2$$

which can be compared with

$$4x^3+3x^2+5x+2$$

the identity of the above algebraic division with arithmetical division will be apparent.

Answers to Examples in November Issue.

1. (*a*) $-3\frac{1}{3}$; (*b*) $1\frac{2}{13}$; (*c*) $(d-b)\ /\ (a-c)$; (*d*) $(nb-md)\ /\ (mc-na)$.
2. $-1\frac{1}{3}$, 0; $-3, -5$; 0, 4:
3. (*a*) 3, 2; (*b*) $-3, -2$; (*c*) $3, -2$; (*d*) $-3, 2$;
4. (*a*) $\pm\sqrt{2}$; (*b*) 3, 4; (*c*) $(a-b), (a+b)$; (*d*) $(b-a), (b+a)$.
5. (Author apologises for a slip in this equation. As it stands it can only be solved graphically.)
6. (*a*) ±2, 4, 1; (*b*) a, b, c, d, e;

   (*c*) $-b\pm\dfrac{\sqrt{b^2-4ac}}{2a}$, $-e\pm\dfrac{\sqrt{e^2-4df}}{2d}$

Examples.—General Equation of the nth Degree.

1. Solve $x^3-4x^2-39x-54=0$ given that -2 is one solution.
2. Solve $x^4-36x^3+193x^2-410x+600=0$ given that $1-2\sqrt{-1}$ is one solution.
3. If a, b, and c are the roots of $x^3+qx^2+r=0$ find the value of $(1/a)+(1/b)+(1/c)$.

Simultaneous Equations for Two Unknowns.

4. Solve the equations

   (*a*) $10x+y/3=37$
   $2x-y=-79$

   (*b*) $\dfrac{3}{3x-2y}=\dfrac{5}{2x+7y}=2$

5. Solve

   (*a*) $x+y=5$
   $x^2+y^2=13$

   (*b*) $3x^2+2xy-y^2=0$
   $x^2+y^2+2x=12$

   (*c*) $x^2+3y^2=43$
   $x^2+xy=28$

6. Solve

   $x^2+3x+y=5$
   $2y^2+x-4=0$

(*To be continued.*)

Introducing Sodium and Potassium into Discharge Tubes.

A Practical Method, and Some of its Applications.

By James Taylor, M.Sc., Ph.D., A.Inst.P. **[535.3**

It has been known for many years[1] that certain of the alkali metals may be introduced, in a very pure form, into discharge tubes, by a method depending upon a sort of electrolysis through the glass walls.

With the development of the technique of high vacuum it became possible to obtain lamps and electronic valves in which the degree of vacuum was extremely high. In such lamps and tubes it is, of course, impracticable to utilise a gas discharge for the introduction of sodium or potassium, but the electronic emission from the filament may be employed in an analogous manner, to the same end.

The method has been described recently[2]

[1] E. Warburg, *Ann. d. Phys.*, Vol. 40, p. 1, 1890.

[2] R. C. Burt, *Phil. Mag.*, 49, 1,168, 1925. *Journ. Opt. Soc.*, 11, 87, 1925.

Digitized by Google

and applied to certain physical problems, such as the investigation of the photo-electric effect of pure sodium.

Introduction of Sodium into Lamps and Thermionic Valves.

The lamp into which it is wished to introduce sodium is placed with its lower part in molten sodium nitrate contained in a metal vessel, as shown in Fig. 1. Aluminium is a very suitable metal for the container to be made of. The sodium nitrate is maintained molten at a temperature of about 350°C. by means of a bunsen flame. It is wise to introduce a suitable thermometer into the

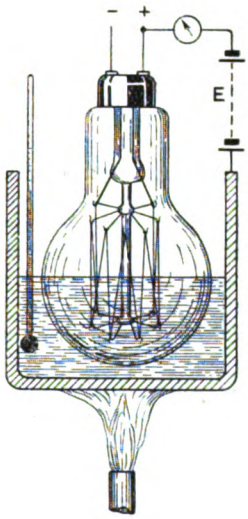

Fig. 1.

molten sodium nitrate, or into a hole in the side of the metal container, in order that the temperature may be maintained at the suitable value, and softening of the glass due to a too high temperature avoided. The lamp filament is made to function on the usual supply, and a source of potential of some 200 or 300 volts is connected between the positive terminal of the lighting circuit and the metal container. It is found as a rule that a current of a few milliamperes flows in the circuit from the metal container to the positive end of the filament, and this may be measured, if required, by means of a milliammeter, included in the circuit as shown in Fig. 1.

The action appears to be in the nature of an electrolysis through the glass walls of the lamp, and is analogous to the ordinary electrolysis phenomena obtained in solutions of salts or in molten salts. The inner surface of the glass is bombarded by the electrons from the filament and becomes negatively charged, forming the cathode. The outer surface of the glass is positively charged from the potential E, and constitutes the anode. There are, of course, many free sodium ions in the molten nitrate, and under the electric field across the glass wall they migrate—since they are positively charged—to the cathode, that is to the inner surface of the glass, and are deposited there or vapourised into the lamp. The action may, of course, be progressive in such a way that the sodium of the glass is actually transferred inwards whilst sodium from the molten sodium nitrate takes its place.

After the action has proceeded for a short time, there is sodium vapour within the lamp, and this gives rise to a discharge of a very typical yellow colour. In a few hours sufficient sodium may be introduced to give a mirror of the metal on the inside of the glass.

If the lamp is made of lead glass it frequently becomes blackened, but even sodium glasses become brown due to a deposit of sodium in the colloidal state.

In a similar manner, but less readily, potassium may be introduced if molten potassium nitrate is substituted for the sodium nitrate.

It will be readily understood how this method can be employed for the introduction of very pure sodium or potassium into thermionic valves.

The method has been utilised for the construction of discharge tubes which have been used in connection with Tesla Coil installations[3] (the tubes were constructed by Kramer of Freiburg), and for helium tubes as detectors of electrical waves[4] (tubes constructed by Goetze of Leipzig). It is certainly a subject which merits further study. It is possible that by varying the nature and composition of the walls, other elements might be introduced in a state of great purity into such evacuated spaces.

[3] See Drude, *Ann. d. Phys.*, 16, 119, 1905.

[4] See Dorn, *Ann. d. Phys.*, 16, 784, 1905.

Digitized by Google

Application to the Case of Neon Lamps and Discharge Tubes.

The commercial type of neon lamp is now very considerably used in wireless practice, and it promises to be still more utilised in the future. Nevertheless, the ordinary type of neon lamp has certain inherent drawbacks which handicap its employment.

Some time ago the present writer and Mr. Clarkson put forward a method of capacity and high resistance measurement utilising the neon tube.[5] In these and later publications[6] the inconstancies of the neon lamps which gave rise to variations and unreliability were dealt with, and certain experiments, such as "over-running" the lamps and employing external ionising agents like half-watt lamps, etc., which ameliorated the conditions, were also described.

Notwithstanding these, no really satisfactory solution was arrived at, and the writer has for a considerable time sought a method for improving these types of discharge tubes for the purpose of capacity and resistance measurement, etc. It has been found that the chief sources of trouble arise from small quantities of electronegative gases, such as oxygen, contained as impurities in the neon-helium mixture, which is the filling gas of these lamps, and the occurrence of films of occluded gases on the surface of the electrodes. These causes of error may be almost entirely suppressed by the introduction of sodium into the discharge tubes, in a manner analogous to that described above.

The method of procedure is the same, except that the ordinary discharge of the neon lamp takes the place of the heated filament and supplies the electrons and ions for the conduction of the current. It is usually sufficient to connect a further potential of 100 volts between the positive electrode of the neon lamp and the metal container, to cause introduction of the sodium. The voltage required for satisfactory working varies somewhat according to the lamp form.

The action of the sodium is twofold. It combines with any active gases, such as oxygen, and thus removes them; further, it is deposited upon the electrodes forming fresh, clean surfaces which reduce the troublesome time "lag" effects in the production of the discharge to a minimum. There is another advantage in that the potential required to drive the discharge tube is lowered by almost 40 volts, due to the introduction of the sodium on the electrodes.

The constants of the tube prove to be much more steady after this treatment, the range of capacity and resistance measurement is consequently considerably increased and the method is more accurate. It is also unnecessary to employ an additional external ionising agent as was recommended in the papers referred to.

By utilising a Philips' tungsten arc lamp (see photo) (the electrodes are small spheres of tungsten at a distance of a millimetre or two. The filling gas is neon at about half an atmosphere pressure) as discharge tube the author has been able to measure accurately by the method of timing flashes[7] by means of a stop-watch, capacities as low as 0.001 microfarads. The circuit resistance for these measurements was of the order of 100 megohms, so that very great care had to be taken to avoid leakage effects. The graphs giving the relation between the time of "flash" and the capacity value were linear, and, within the limits of experimental error, passed through the origin.

[5] Taylor and Clarkson, *Journ. Scient. Instrs.*, Vol. 1, No. 6, 1924. *E.W. & W.E.*, Vol. 2, No. 14, p. 97.

[6] *E.W. & W.E.*, Correspondence, Vol. 2, No. 14, p. 121; Vol. 2, No. 26, p. 915; *Journ. Scient. Instrs.*, Vol. 2, No. 5, p. 154, 1925.

[7] See *E.W. & W.E.*, Vol. 2, No. 14, p. 97; and Vol. 2, No. 26, p. 915.

Digitized by Google

Abstracts and References.

Compiled by the Radio Research Board and reproduced by arrangement with the Department of Scientific and Industrial Research.

R000.—WIRELESS IN GENERAL.

R040.—RADIO COMMUNICATION.—G. Marconi. (*Electrician*, 97, 29th October, 1926, p. 502.)

Abstract of the James Forrest lecture delivered at the Institution of Civil Engineers, 20th October, 1926.

R100.—GENERAL PRINCIPLES AND THEORY.

R112.6.—SHORT-WAVE TESTS AT DEAL BEACH. (*Scientific American*, October, 1926, p. 306.)

An experimental station of the Bell Telephone Laboratories at Deal Beach, New Jersey, is investigating various phases of short-wave transmission. The power of the test transmitter varies from one kilowatt on the shorter waves to four kilowatts on the longer wave channels, operation usually taking place over a wavelength range of 16 to 111 metres. It is observed that short waves are attenuated more than long waves over distances up to 100 miles, but that at greater distances the signal strength of the short waves increases. In most instances, fading is found to be less marked on longer waves. The quality varies somewhat when the carriers and side bands fade simultaneously but the greatest variation occurs when the frequencies do not fade at the same time. For distances between a few hundred and a thousand miles there is little difference between over-land and over-water transmission. Day transmission is better than night on some of the shorter waves.

R113.—PROPAGATION DES ONDES COURTES.—R. Mesny. (*L'Onde Electrique*, 5, 57, pp. 434-463, September, 1926.)

Lecture delivered before the "Société des Amis de la T.S.F.," 11th May, 1926.

The author first recalls the observed facts characterising short wave propagation: long range; zones of silence; fading; influence of night and day, the season, and geographical position; and then gives the theories that have been put forward to explain them. After indicating the hypotheses on which physicists justify the existence of a conducting layer in the upper atmosphere, he studies the propagation of waves in an ionised medium, showing how they are reflected or refracted towards the earth, and deduces an approximate explanation of the phenomena observed. Lastly, he gives some particulars of the experiments verifying the theories and shows the manifest divergencies that still exist between the facts observed and the consequences of the theories proposed.

R113.—THE RELATIVE VALUES OF LONG AND SHORT WAVES IN WIRELESS COMMUNICATION (*E.W. & W.E.*, 3, 38, pp. 692-698, November, 1926.)

A discussion, opened by Dr. Eccles, before the Radio Society of Great Britain, at the first meeting of its 1926-27 session.

R113.—RECENT DEVELOPMENTS IN SHORT-WAVE WIRELESS TELEGRAPHY.—H. Rukop. (*E.W. & W.E.*, 3, 38, pp. 681-691, November, 1926.)

Concluding part of the translation of the Telefunken publication *Neuere Ergebnisse in der Drahtlosen Telegraphie mit Kurzen Wellen*, begun in the previous issue.

R113.—DIE BILDTELEGRAPHIE ALS UNTERSUCHUNGSMETHODE FÜR DIE AUSBREITUNG DER KUNZEN WELLEN (Picture telegraphy as a method of investigating the propagation of short waves).—H. Rukop. (*Elektrische Nachrichten-Technik*, 3, 8, pp. 316-318.)

In July, 1926, the Telefunken Company arranged a service of picture-telegraphy on the Telefunken-Karolus system between Nauen and Rome. The wavelength employed was about 39m. This service yielded not only valuable experience in picture transmission, but also interesting information on the propagation of short waves, a brief preliminary account of which is given here. The two chief effects that throw light on the propagation of short waves are found at certain hours of the night on the transmitted pictures, and are called the "multiple" and "wandering" effects, shown in the figures below:—

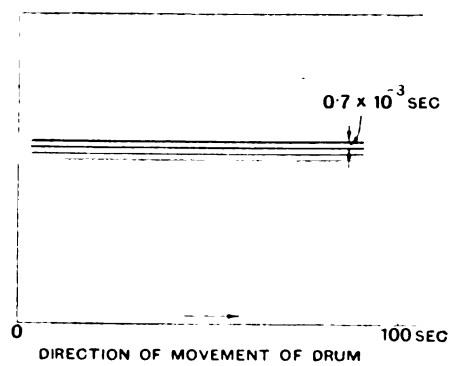

Fig. 1.—*Multiple effect. Multiple reception of a line transmittance.*

Digitized by Google

The multiple effect consists in a sign in the picture appearing displaced twice or more in the time axis. The displacement shown here amounts up to 3 mm., and occasionally fourfold repetition occurs. The simplest explanation consistent with our present knowledge of short waves is that transmission from the transmitter to the receiver takes place simultaneously along several paths of different length. From the velocity of the lines in the figure it follows

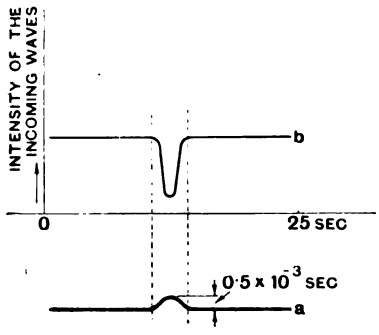

Fig. 2.—*Wandering effect.*

that a separation of two pictures by 1 mm. denotes a difference of length of path of about 200 km. In the case of four pictures, whose total distance apart is 3 mm., we are consequently dealing with path differences of 0, 200, 400 and 600 km. The pictures with a longer path are generally much weaker than those with a shorter one and there is usually a principal path, and that the shortest, with which the subsidiary paths may for a few seconds coalesce. When the multiple pictures occur, there is also as a rule marked fading, though this is not compulsorily linked with the multiple phenomena.

The wandering effect is shown by line *a* of Fig. 2, and is attributed to a transient lengthening and shortening of the transmission path. It is always strikingly accompanied by marked fading, as shown by line *b* in the same figure. Since, while this fading occurs, the transmission path varies by a distance corresponding to more than 2,000 periods and, as the figure shows, nothing remains of the original path, and the picture is perfectly simple, it is concluded that it is highly improbable that fading is due to interference. What is thought to be the most likely cause of fading is rapid alteration in the concentration of the ions or electrons, brought about either through purely mechanical means, *e.g.*, wind, or electrical discharges or a stream of radiation.

Further, owing to the variation of the length of path, one would expect a Doppler effect, *i.e.*, a transient alteration of the frequency at the receiver with the transmitting frequency constant, and this has been remarked during the tests (and also often previously).

The observations are being continued.

R113.1.—Uber das Verhalten von Empfängun bei Polarisationsänderungen der Elektrischen Wellen (Fadingerscheinungen) (Behaviour of receivers to changes of polarisation of electric waves (fading phenomena)).—A. Esau. (*Zeitschrift für Hochfrequenz*, 28, 2, pp. 50-53, August, 1926.)

Fading may be caused by changing atmospheric conditions (*e.g.*, cold strata penetrating into warmer ones, bringing about dispersion of the wave energy) or by interference between direct and indirect rays, or by alteration of the plane of polarisation of a wave. This article deals only with the latter cause, and attempts to eliminate it by a suitable choice of the receiving circuit. Various antenna combinations are examined with reference to the relation between the energy received and the rotation of the plane of polarisation. The combinations all consist of a vertical and a horizontal antenna, both coupled to a circuit which is tuned to the incoming wave and connected to the grid of a valve functioning either as detector or amplifier. The simplest arrangement is a combination of a vertical open antenna and a horizontal frame. The energy picked up is independent of the plane of polarisation, and thus fading phenomena due to changes of polarisation are eliminated. The arrangement also permits the angle of rotation of the plane of polarisation to be determined and its transient changes. The other combinations considered reduce fading to a certain extent, but are less effective than the arrangement described.

R113.2.—Some Measurements of Short Wave Transmission.—R. Heising, J. Schelleng and G. Southworth. (*Proc. Inst. Radio Engineers*, 14, 5, October, 1926, pp. 613-647.)

Quantitative data on field strength and telephonic intelligibility are given for transmission at frequencies between 2.7 megacycles (111 metres) and 18 megacycles (16 metres), and for distances up to 1,000 miles with some data at 3,400 miles. The data are presented in the form of curves and surfaces, the variables being time of day, frequency and distance. Comparisons are made between transmission over land and over water, between night and day effects, and between transmissions from horizontal and from vertical antennæ. Fading, speech quality and noise are discussed. The results are briefly interpreted in terms of current short wave theories.

R113.8.—Sur la Recherche d'une Correspondance entre les Perturbations Magnétiques et les Perturbations dans la Propagation des Ondes Electromagnétiques.—C. Maurain. (*L'Onde Electrique*, 5, 57, September, 1926, pp. 483-487.)

A statistical study of the magnetic disturbance at the Val Joyeux observatory at the time of the principal variations in intensity of the long wave radio signals received at the Meudon observatory has been made during 1922-23-24. The result is that the mean value of the magnetic disturbance at the time of these variations is sensibly the same as the general mean value, showing that magnetic disturbances do not play an important part in

Digitized by Google

the production of these radio variations. If the statistics are referred only to the days on which the intensity variations occur for the two transmitters investigated, Bordeaux and Nantes, a mean magnetic disturbance is obtained greater than the general mean; but the number of these days in the three years is too few for one to be able to draw a conclusion from this particular result.

R113.8.—HAT DAS ERDFELD EINEN EINFLUSS AUF DIE WELLENAUSBREITUNGSVORGÄNGE? —(Does the Earth's Field Affect the Phenomena of Wave Propagation?)—A. Meissner. (*Elektrische Nachrichten-Technik*, 3, 9, September, 1926, pp. 321-324.)

Larmor's theory of the refraction of electric waves by means of the ions and electrons of the upper atmosphere was completed last year by taking account of the influence of the earth's field on electronic motion (Appleton, Nichols and Schelleng). As a consequence of this extension of Larmor's theory, calculation shows that the wave of length 214 metres must be a resonance wave, for which there is selective absorption and a corresponding shorter range. Taylor saw experimental confirmation of the extended theory in the decrease of the day range observed with waves in the neighbourhood of 200 metres.

The curve shows a distinct minimum with a wave of about 200 metres and the earth's field theory requires it at 214 metres. The explanation of this minimum through the influence of the earth's field leads however to contradictions. We must only seek the influence of the earth's field there where the electrons govern the phenomenon of wave propagation, *i.e.*, where wave transmission takes place through the upper layers of the atmosphere; *i.e.*, when it is a question of pure space radiation; this is the case by day however only with the

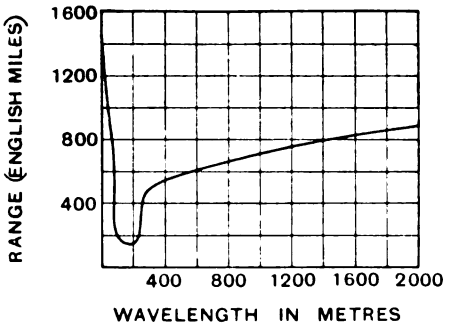

Fig. 1. *Day ranges according to Taylor.*

shortest waves—far below 150 metres. With waves above 150 metres, and therefore in the range of the critical wavelength of 214 metres, we have by day only surface waves, and the electrons hardly affect the propagation of surface waves greater than 100 metres, as has also been worked out by Elias (*Zeitschr. für Hochfrequenz*, 27, p. 66). According to Elias's calculations, the electrons and ions of the atmosphere by day only produce absorption with waves down to 100 metres. The dielectric effect of the electrons and ions only begins to be felt with very short waves, below 20 or 30 metres, when absorption is less pronounced.

In Taylor's curve the day ranges are represented as a function of the wavelength: the figure below shows them as a function of the frequency.

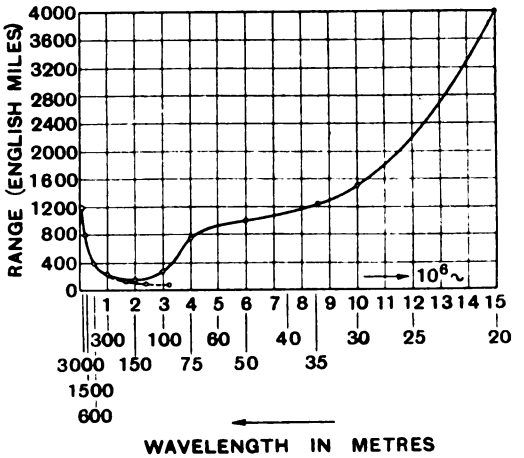

Fig. 2. *Day ranges.*

Here the curve no longer appears to represent a uniform phenomenon, disturbed only over a small range, but rather the interaction of two quite heterogeneous phenomena. Firstly, it is seen that the minimum is displaced still farther to the right, still farther from the critical frequency $\lambda = 214$ metres required by theory. The two heterogeneous conditions are divided by the minimum. Evidently to the left of the minimum we have the range of the surface waves, and to the right the range of the space waves. The drop on the left is produced by the surface waves being absorbed by the ground or by the electrons and ions of the lower layers; the rise to the right of the minimum comes from the upper layers taking over more of the energy transference with increasing frequency. The minimum is the intersection of two curves: that of the surface waves falling from left to right, approximately inversely proportional to the square of the frequency or more as corresponding to the first power (the curve $1/n^2$ is drawn in as it would presumably be if the ground losses were the deciding factor), and that of the space waves to the right of the minimum for which the values are not sufficiently clear for one to assign any definite function for the frequency relation. The result therefore is that from the day ranges here we can nowhere deduce the influence of the earth's field. If we wish to discover this, the experimental investigations in the neighbourhood of the critical wave $\lambda = 214$ metres must be extended into the night hours, for only at night is energy transferred by space waves in strata

Digitized by Google

whose dielectric state is altered through ions and electrons. Accordingly transmissions were made at night with waves in the critical range $\lambda = 175$-265 metres, employing an aerial with the greatest possible space radiation. The arrangement is shown diagrammatically in the figure below.

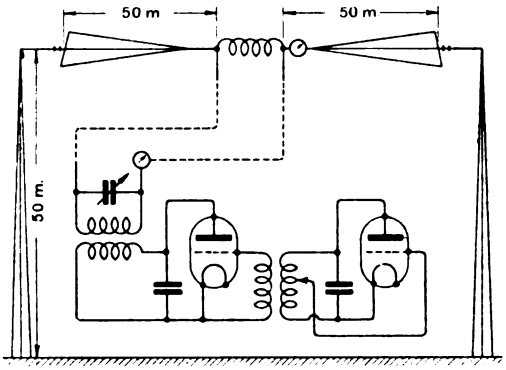

Fig. 3. *Transmitting arrangement.*

Numerical values are given and the method of carrying out the experiments is described. The waves were received at Prague, Kiel, Constance and Leningrad, and results obtained are shown graphically. An analysis of all the results is said to show no minimum anywhere in the range, and therefore, also with transmission by night, we cannot speak of special absorption and fading phenomena with a particular wave. Thus neither day nor night ranges, unfortunately, bring us experimental proof of the earth's field having an influence on wave propagation, that is so necessary for our theory.

R113.8.—Aurora and its Effect upon Radio Signals.—W. Sutton. (*Q.S.T.*, October, 1926, 10, pp. 23-24.)

The writer, who is "in a position to keep a very close check upon the Aurora," is convinced that it has a decided and detrimental effect upon radio signals of certain frequencies, and attributes the poor reception complained of throughout Canada and the United States last winter to the increasing activity of auroral phenomena. The writer expresses the results of his observations as follows:—

"Strong Aurora kills signals from 35 metres up to 500, although the effect is only immediate on signals up to approximately 60 metres. As one goes up higher in wavelength the time lag is increased. The delay between the start of the Aurora and the disappearance or weakening of signals may be as long as 24 hours in the upper broadcast band. The signals also take much longer to come back to normality.

"Moderate Aurora makes quite a change on the skipped distance of 40-metre signals, and prevents real DX. As we go 10 metres higher the signals gradually fade out. In the broadcast band distance signals are coming in, but fading is very prominent, and no medium distant stations came through.

"Slight Aurora changes the skipped distance just slightly on the 40-metre band, and causes fading on medium distance broadcast stations, but distant stations are fairly steady. The 50-metre signals will push through but are much weaker. Intermittent Aurora, coming for a few hours and lifting for a day, and then coming back again, will cause a continued blanket on broadcast signals, but the short waves will break through whenever the Aurora has lifted."

The increased activity of auroral phenomena generally reported is thought to be linked up with the approaching sun spot maximum.

R113.8.—The Recurrence of Magnetic Storms.—H. Deslandres. (*Nature*, 30th October, 1926, pp. 621-622.)

A letter referring to Dr. Chree's in *Nature* of 4th September, showing the considerable difference in the methods employed by the two writers and that the results obtained could not be exactly the same.

R121.—The Aerial-Earth System.—A. G. Warren. (*Wireless World*, 13th October, 1926, pp. 517-518.)

Discussion of half-wave tuning with potential rectification.

R127.—Field Distribution and Radiation Resistance of a Straight, Vertical, Unloaded Antenna Radiating at one of its Harmonics.—S. Levin and C. Young. (*Proc. Inst. Radio Engineers*, October, 1926, 14, 5, pp. 675-688.)

The operation at the harmonics of the grounded antenna and of an ungrounded antenna at any distance above ground is considered as far as current, voltage and power distribution, electromagnetic field and radiation resistance are concerned. The antenna is always assumed to be a straight vertical wire and unloaded and the ground a perfect conductor.

R132.—Ein Vergleich Zwischen Transformatorenverstärker und Widerstandsverstäker (Comparison between transformer and resistance amplifiers).—M. von Ardenne. (*Zeitschrift für Hochfrequenz*, 27, 6, 1926, pp. 167-169.)

An investigation of the amplifying properties of a transformer amplifier (without resonance tuning) and a resistance amplifier, at a frequency of 1,000. To make a definite comparison possible, a formula is found for resistance amplifiers corresponding to the Barkhauser formula for the linear degree of amplification with transformer amplifiers. The investigation shows that, with the same assumptions, a greater degree of amplification can be obtained with resistance than with transformer coupling.

R132 & R134.75.—Grundsätzliches über Zwischen Frequenzverstärker-Schaltungen (Principles of intermediate frequency amplifier circuit arrangements).—W. Range. (*Zeitschrift für Hochfrequenz*, 27, 6, pp. 169-172.)

The intermediate frequency amplifier is discussed

Digitized by Google

and four methods are given of avoiding the difficulties that arise in obtaining the right beat note of useful frequency with the heterodyne and input circuit (tuned to the distant transmitter and connected to the first rectifier) coupled together and slightly out of tune.

R132.1.—LOW-FREQUENCY INTERVALVE TRANSFORMERS.—P. Willans. (*Journ. Inst. Elect. Engineers*, 64, October, 1926, pp. 1065-1088.)

A paper read before the Wireless Section, 2nd June, 1926, summarised as follows:—

The theoretical expression for the voltage amplification of a valve followed by a transformer is developed in its simplest possible terms and various particular cases are considered. The importance of low leakage inductance for the uniform amplification of the higher frequencies is emphasised.

A practical verification of the theory is provided by actual measurements of the vector amplification ratio and comparisons with the theoretical equations, and graphical methods are given whereby the constants of a transformer can be deduced from these measurements and the amplification ratio extrapolated to frequencies beyond the range of convenient measurement.

A practical design of transformer is described in which low leakage inductance and self-capacity are ensured by a sectionalised and spaced construction, and a curve of amplification of this transformer is given.

Various questions relating to intervalve transformers are briefly considered, and circuits are described for increasing the amplification of low frequencies and the effective step-up ratio of the transformer.

The use of low-frequency reaction for correcting distortion is described and illustrated by measurements.

R132.3.—RECHERCHES SUR LES MEILLEURES CONDITIONS DE FONCTIONNEMENT D'UN AMPLIFICATEUR À RÉSISTANCES.—M. Mercier. (*L'Onde Electrique*, 5, 56, August, 1926, pp. 413-424.)

Description of an investigation on the conditions of working of a resistance amplifier as concerns the best heating and plate tensions to employ and the best resistance to introduce in the plate circuit of intermediate valves. The results are shown graphically.

R132.8.—PRÉSENTATION D'UN APPAREIL "BIREFLEX."—A. Cazes. (*L'Onde Electrique*, 5, 56, August, 1926, pp. 425-428.)

A paper, introducing a "bireflex" instrument, summarised as follows: The first valves of an amplifier do little work. The output can be improved by making them play several parts. The employment of a frequency changer can make each valve work on three different frequencies. A second change of frequency enables the difficulties that subsist to be avoided.

R132.8.—BY-PASS CONDENSERS IN REFLEX RECEIVERS.—D. Kingsbury. (*Wireless World*, 20th October, 1926, pp. 546-550.)

An article showing how by-pass condensers in reflex sets may be kept down to practical limits and in certain cases dispensed with, and giving reasons why general reception should be limited to 5,000 cycles on either side of the carrier wave and L.F. transformers designed accordingly.

R133.—ÜBER DIE SCHWINGUNGSERZENGUNG MIT HILFE VON RAUMLADEFFEKTEN (On the generation of oscillations with the aid of space-charge effects).—E. Alberti. (*Elektrische Nachrichten-Technik*, 3, 9, September, 1926, pp. 328-332.)

An account of experiments on the generation of oscillations with four-electrode valves with control-grid negative. Several circuit-arrangements are possible, three of the most important being shown. The degree of efficiency for the amplifying valves type *R* used in the experiments amounts to 10 per cent. with optimum adjustment. There is almost absolute proportionality between space-charge grid tension and output. From measurements of the dependence of the frequency on the strength of the beating current, it is found that an alteration of the current strength of 1 per cent. corresponds to an increase of valve capacity of about .2 cm. With ordinary transmitting valves the increase is somewhat lower. On reducing the anode tension the oscillations stop at about 30 volts, while below 15 volts oscillations start again, which are probably to be explained in the Barkhauser-Kurz way.

R134.—THEORY OF DETECTION IN A HIGH VACUUM THERMIONIC TUBE.—L. Smith. (*Proc. Inst. Radio Engineers*, 14, 5, October, 1926, pp. 649-662.)

This paper presents some new ideas on detection by means of the high vacuum triode in connection with a grid-leak and condenser, which show the function of the grid-leak and detector as well as their proper values for best detection. Three main sources of distortion are shown to exist with this method of detection: two from the curvature of the grid characteristic—one due to the harmonics produced, and the other an amplitude distortion arising from the rectified grid-current not varying linearly with the input voltage—the third distortion being brought about by the grid-leak and condenser.

R134.—GRID POTENTIALS.—C. Stephenson. (*Wireless World*, 6th October, 1926, pp. 491-493.)

Discussion of the effect of filament circuit connections on the mean grid voltage of H.F. detector and L.F. valves.

R134.75.—SUPERHETERODYNE INTERFERENCE.—P. Tyers. (*Wireless World*, 13th October, 1926, pp. 521-522.)

A brief note showing how changing the intermediate frequency avoids local jamming.

R134.75.—ON THE ORIGIN OF THE SUPERHETERODYNE METHOD.—W. Schottky. (*Proc. Inst. Radio Engineers*, 14, 5, October, 1926, pp. 695-698.)

A short outline of how and when the idea of the superheterodyne method took shape in Germany.

Digitized by Google

R138.—Über den Austritt von Elektronen aus Kalten Metallen (Electronic emissions from cold metals).—F. Rother. (*Annalen der Physik*, 81, 4, pp. 317-372.)

R142.—Combined Electromagnetic and Electrostatic Coupling and some Uses of the Combination.—E. Loftin and S. Young White. (*Proc. Inst. Radio Engineers*, 14, 5, October, 1926, pp. 605-611.)

The energy transfer characteristic of the normal forms of coupling employed in radio receivers transfers energy more readily at higher than lower frequency. This characteristic makes for higher efficiency and consequently greater tendency towards instability in commercial valve receivers on the high-frequency portion of the broadcast band.

The investigation of the combination of electromagnetic and electrostatic couplings was undertaken for the purpose of removing this undesirable characteristic, and this paper outlines some of the more salient observations made during the investigation as well as some uses made of the combination. One of these features is the employment of a method of coupling which has its frequency characteristic reversed in that its most efficient energy transfer takes place at the lowest frequency. By suitably combining this method of coupling with a coupling having the usual characteristic, it is possible to so design the combined coupling that the total energy transfer will vary in any desired manner with frequency.

R145.—A Method for Maximisation in Circuit Calculation.—W. van B. Roberts. (*Proc. Inst. Radio Engineers*, 14, 5, October, 1926, pp. 689-693.)

Having found the expression for a current (or voltage or power, etc.) in terms of complex quantities representing the constants of a circuit, it is often desired to determine what value of some one of these complexes makes the absolute magnitude of the current (or voltage, etc.) a maximum or a minimum. Rather than reduce the expression to its absolute value first, and then maximise in the usual way, it is often much less tedious to differentiate the expression while in the complex form. The condition that the absolute value is an extremum is then not that the derivative is equal to zero, but that the derivative multiplied by a small increment of the independent variable gives to the dependent variable an increment which is at right angles to the vector representing the dependent variable itself. The condition of maximum obtained by this method is often in a form that is more compact and that has obvious physical significance. Two examples of the use of the method are given.

R148.1.—The Frequency Characteristics of Telephone Systems and Audio-Frequency Apparatus, and their Measurement.—B. Cohen, A. Aldridge and W. West. (*Journ. Inst. Elect. Engineers*, 64, October, 1926, pp. 1023-1064.)

A paper read before the Institution, 29th April, 1926.

R149.—Sur la Détection par les Contacts Métalliques.—H. Pélabon. (*L'Onde Electrique*, September, 1926, pp. 464-475.)

The detection of electromagnetic waves by means of a metal-dielectric-metal contact has already been described (*L'Onde Electrique*, 5, 52, 1926, p. 141). Another solution of the problem is considered here, namely with the metals directly in contact. The apparatus employed is described for the case of the contact sphere-plane, two spheres, and a point and a plane, the results being given in detail. The case of the symmetrical detector is considered and the influence of the nature of the metals. The mechanism of detection is ascribed to the passage of electrons from one conductor to the other, the passage being easier in one direction than in the opposite direction.

R149.—Sur le Contact Rectifiant.—A. Guillet. (*Comptes Rendus*, 183, 5, 2nd August, 1926, pp. 350-352.)

The fact appears now to be established that any bad contact inserted in a circuit is able to detect when a suitable electromotive force is applied to the circuit. A rectifying contact is thus comparable with a small unsymmetrical condenser that discharges across the insulation when one plate, the point in the case of the galena detector, receives a large enough charge of negative electricity. This is the point of view adopted by Mlle. Collet (*Annales de Physique*, 15, 1921, p. 265) and by M. Pélabon (*L'Onde Electrique*, 5, April, 1926, p. 141), but these physicists have given only qualitative indications as to the probable mechanism of the phenomenon. This article calls attention to certain general measurable facts calculated to assist the formulation of a definite theory.

R200.—MEASUREMENTS AND STANDARDS.

R261.—The Thermionic Voltmeter.—W. Medlam and U. Oschwald. (*E.W. & W.E.*, 3, 38, November, 1926, pp. 664-673.)

Concluding part of the article begun in the October issue.

R300.—APPARATUS AND EQUIPMENT.

R320.—The Length of the Hertz Antenna.—G. Lang. (*Q.S.T.*, 10, October, 1926, p. 16.)

The results are tabulated of experiments with Hertzian antennæ: vertical, horizontal, and with both vertical and horizontal sections. It is found that for vertical antennæ the wire length in feet is 1.40 times the fundamental wavelength in metres, and for horizontal antennæ the wire length in feet is 1.46 times the wavelength in metres—thus if we wish to operate at 40 metres with a horizontal antenna we multiply 40 by 1.46 and get 58.4 as the length of the necessary system. The table also shows the results of tests on antennæ of other forms, the constants for which are found to vary with the angle between the wires and ground.

Digitized by Google

R329.1.—THE CANADIAN BEAM SERVICE. (*Electrician*, 97, 22nd October, 1926, p. 474; 97, 29th October, 1926, p. 498.)

Details are given of the Bodmin transmitting and Bridgwater receiving stations, for communication between this country and Canada and South Africa, forming part of the short-wave imperial system.

R330.—RADIOTRON MODEL UX210. (*Q.S.T.*, 10, 9, September, 1926, pp. 33-36.)

A detailed account of this new valve, designed for use as an oscillator, modulator, or power amplifier in radio transmitting circuits or as a power amplifier with loud-speakers where high output is required. The valve data are given and characteristic curves shown.

R330.04.—MICROPHONIC NOISE.—F. Henderson. (*Wireless World*, 20th October, 1926, pp. 553-554.)

Some notes on its cause and cure.

R331.5.—ETUDE DES GAZ OCCLUS DANS LES TRIODES.—J. Groszkowski. (*L'Onde Electrique*, 5, 56, August, 1926, pp. 404-412.)

A study of the vacuum in valves and more particularly of the presence of gases occluded in the electrodes. The degree of vacuum in a triode can be estimated by means of an ionisation method depending upon the measurement of the "inverse" current due to the ions of the liberated gases. This article describes in detail this method, which has been improved and more especially adapted to the investigation of gases occluded in electrodes.

R.334.—LA SUPER-RÉACTION PAR LAMPE BIGRILLE.—J. Sacazes. (*Q.S.T. Français et Radio Electricité Réunis*, 7, 30, September, 1926, pp. 51-55.)

Description of a simple circuit arrangement for super-reaction with the four-electrode valve.

R334.—LA LAMPE À DEUX GRILLES.—M. Chauvierre. (*Q.S.T. Français et Radio Electricité Réunis*, 7, 30, September, 1926, pp. 32-41.)

A brief survey of the general characteristics of four-electrode valves and their employment in the classic circuits.

R341.6.—A DISTINCTLY NEW RECTIFIER.—H. Sheldon. (*Scientific American*, 82, September, 1926, pp. 186-187.)

Description of a small compact rectifier of low internal resistance, consisting of a dry metal oxide between two electrodes, said to be able to rectify a large current on a very little voltage: about three amperes on a volt and a half.

R355.52.—LES RELAIS À ARC.—E. Fromy. (*L'Onde Electrique*, 5, 56, August, 1926, pp. 379-403.)

Partially exhausted tubes, more particularly mercury vapour bulbs, are now in current use for changing alternating into continuous current. They thus play the rôle of valve, behaving like very powerful diodes. By the addition of extra control electrodes, either interior grid or exterior sheath, it is possible to transform gas-containing tubes into relays, just as that wonderful relay the triode valve has been formed from the electronic diode—the fundamental difference between the two types of relay, of course, being that in the ordinary valve the current is carried by electrons, while in the gas-containing tube it is carried by ions. This article describes at length the principle and operation of the new relays, defining the limits of their present usefulness. A bibliography of the subject is appended.

R376.3.—A NEW LOUD-SPEAKER. (*Electrician*, 97, 29th October, 1926, p. 510.)

A brief illustrated account of the "R.K." speaker, invented by Mr. Rice and Mr. Kellogg and made by the B.T.-H. Co. The sound is conveyed by a plain paper cone, with the natural frequency of vibration very low in the audible range, and the instrument is claimed to miss nothing and distort nothing.

On the same page a novel type of gramophone, called the "Panatrope," is outlined, which can be used as a wireless receiver.

R376.3.—ACOUSTIC REFLECTION.—N. McLachlan. (*Wireless World*, 13th October, 1926, pp. 506-508.)

An account of the influence of echoes on loud-speaker quality.

R383.—METALLISED HIGH RESISTANCE UNITS.—J. Morgan. (*Q.S.T.*, 10, 9, September, 1926, pp. 37-39.)

The history of the design of high resistance units is briefly traced, including the improvement introduced by engineers of the International Resistance Co., and the production of standard resistors described.

R400.—SYSTEMS OF WORKING.

R411.—SPARK COIL PORTABLE TRANSMITTERS.—F. Wilburn. (*Q.S.T.*, 10, 9, September, 1926, pp. 40-41.)

Illustrated description of a small portable transmitter with a pair of Ford coils connected in parallel for power supply.

R432.—REDUCTION OF INTERFERENCE IN BROADCAST RECEPTION.—A. Goldsmith. (*Proc. Inst. Radio Engineers*, 14, 5, October, 1926, pp. 575-603.)

The factors in station interference with broadcast reception are analysed, namely: signal field strength, receiver selectivity, and psychological reactions of the listeners.

Statistical data, correlating these factors with interference complaints from listeners in the vicinity of the 50-kilowatt broadcasting transmitter at Bound Brook are presented, these data being the results of a survey by a special interference reduction service.

The clearing up of complaints by this service, using simple methods which are described, indicates the feasibility of high-power broadcasting

Digitized by Google

stations, as well as the necessity for them owing to the requirement of reliable broadcasting service over large areas.

R435.—Système de Communications Electriques Secrètes.—J. Jammet. (*L'Onde Electrique*, 5, 56, August, 1926, pp. 365-378.)

Previous solutions of the problem of secret communications are said to be pretty complex and to secure only very relative secrecy. The author claims to have developed an absolutely secret method, of simple mechanism, and involving no new apparatus. This new principle appears to lie in the employment of a key that is without periodicity and therefore undecipherable. The working out of the system is explained in detail and diagrams are shown.

R435.—Télégraphie et Radiotélégraphie Secrète.—Gen. Cartier. (*Radio Electricité*, 7, 112, 25th July, 1926, pp. 275-278; 7, 113, 10th August, 1926, pp. 297-301.)

A detailed description of the Vigenère cryptographic system, showing circuit diagrams.

R500.—APPLICATIONS AND USES.

R536.—Radio Safeguards Miners.—(*Scientific American*, 82, September, 1926, p. 223.)

A radio warning alarm has been developed to safeguard miners in the Pennsylvania coalfields against explosions of coal-dust and the deadly effects of gas accumulation. The device utilises the simplest of radio circuits comprising a valve, variable condenser, sensitive relay and alarm bells. The charged condenser plates only discharge when the air between them becomes more conducting due to a higher proportion of coal-dust. Each discharge of the condenser is accompanied by a closing of the relay circuit that rings a bell. The rate at which the bell rings gives an indication of the change of conditions to the operator in charge above, who can then regulate the ventilating system accordingly.

R551.1.—Etablissement d'un Nouveau Canevas de Positions Géographiques.—R. Jouaust. (*L'Onde Electrique*, 5, 57, September, 1926, pp. 429-433.)

An article giving some particulars of the new determination of longitudes that is being carried out under the auspices of the Unions Internationales d'Astronomie et de Géophysique, and showing the value of radio telegraphy for the accuracy of the results, in enabling the time at any given observatory to be communicated instantaneously to distant observers.

R586.—Sur le Téléphote Appareil de Télévision par Tubes à Vide: Resultats Experimentaux Préliminaires.—A. Dauvillier. (*Comptes Rendus*, 183, 5, 2nd August, 1926, pp. 352-354.)

Among the numerous mechanical systems of monochrome television proposed up to the present, those of Mihaly, Jenkins and Belin have recently effected the transmission of moving strongly contrasted shadows, and that of Baird, the transmission of a normal image. The author, however, is of the opinion that these ingenious systems are not capable of a simple and practical solution of the general problem, and that the only method that could give complete satisfaction is one based on the employment of a Braun tube as receiver subordinate to a mechanical analyser of the image to be transmitted. An outline of the method is given, but its development has not yet reached the stage of practical usefulness, a gain of sensitivity of the order of a thousand being required for the apparatus to be sufficiently affected.

R586.—Electric Television.—A. Campbell Swinton. (*Nature*, 118, 23rd October, 1926, pp. 596.)

A letter stating that the writer understands that more than one inventor in Paris is employing for receiving, that cathode ray arrangement that he believes he was the first to publish in a letter to *Nature* of 18th June, 1908. His ideas were further detailed in an address to the Röntgen Society on 7th November, 1911, and still further elaborated and brought up to date, with wireless methods applied, in a paper read before the Radio Society of Great Britain on 26th March, 1924. His plan, which was to use cathode rays as employed in the Braun oscillograph, both for transmitting and receiving, is at present only being applied for receiving, mechanical apparatus being still used for transmitting. He desires, however, to point out, that when the cathode ray is also applied to transmitting, it will be possible to dispense entirely with all moving material parts, as the alternating or intermittent electric currents employed for moving the two cathode ray beams synchronously at the transmitting and receiving stations respectively can be supplied by oscillating thermionic valves supplied by batteries.

In this way, he states, it should prove possible to have electric television of a satisfactory fine grain description without the employment of any mechanical motion or material parts whatever, as cathode rays are practically without weight and inertia, and can be deflected with perfect accuracy and synchronism at almost incredible speeds, while the accuracy of oscillating valves properly tuned is also wonderful.

R800.—NON-RADIO SUBJECTS.

534.—Recent Developments in the Recording and Reproduction of Sound.—S. Williams. (*Franklin Institute Journal*, 202, 4, October, 1926, pp. 413-448.)

539.—Kathodenzerstaübungsprobleme.—A. v. Hippel. (*Annalen der Physik*, 80, 7, pp. 672-706.)

Description of a new method for investigating cathode sputtering which shows that sputtered metal particles consist very largely of uncharged atoms.

Digitized by Google

Esperanto Section.

Abstracts of the Technical Articles in our last Issue.

Esperanto-Sekcio.

Resumoj de la Teknikaj Artikoloj en nia lasta Numero.

R000.—SENFADENO ĜENERALE.

R040.—La Relativaj Valoroj de Longaj kaj Mallongaj Ondoj je Senfadena Interkomunikado. Diskutado antaŭ la Radio-Societo de Granda Britujo.

La diskutadon malfermis D-ro. Eccles, kiu aludis al frua laborado je mallongaj ondoj. Longaj ondoj vojaĝas preskaŭ egalbone dum tago aŭ nokto, kaj la distanco de ricevado dependas nur de la potenco uzata. Mallongaj ondoj estas riceveblaj je proksimaj distancoj; poste sekvas distanco sensignala, post kiam signaloj estas denove haveblaj. Mezuroj de signalforteco de Heising, Schelling, kaj Southworth estas ankaŭ cititaj. Ĝenerale, post la sensignala distanco, la signaloj dum tempo plifortiĝas. Oni konkludas ke, por komercaj celoj, organizacioj kiuj bezonas nur kelkajn horojn ĉiutage alprenos mallongajn ondojn, sed komercaj organizacioj, kiuj konkuras kun kablo-kompanioj, trovos longajn ondojn pliofte fidindaj.

Admiralo Sir Henry Jackson daŭrigis la diskutadon, citante siajn proprajn observadojn pri mallongonda ricevado. Li emfazigis la helpon, kiun povus fari la amatoroj, dirante, ke ili devas labori sisteme, funkciantaj je unu ondlongo kun unu stacio dum unu-du semajnoj, poste je aliaj ondlongoj kaj stacioj.

Poste partoprenis en la diskutado S-roj. Gerald Marcuse, H. Bevan Swift, E. H. Shaughnessy, P. R. Coursey, M. Child, kaj Hogg.

S-ro. Shaughnessy diris, ke kelkaj mallongondaj stacioj kun malgranda potenco entreprenas eksperimentan kaj komercan laboron, kaj estas tiel aranĝitaj, ke ili povas entrepreni trafikon dum la plej bonaj horoj de l'tago por mallongaj ondoj. Granda kampo por mallongondaj stacioj kredeble kuŝas en tiu direkto. S-ro. Coursey aludis al la efekto de la antena formo, kaj al la ebleco de du-tri samtempaj sendoj je malsamaj ondlongoj, kiuj eble estos valoraj laŭ eksperimenta kaj komerca vidpunktoj.

D-ro. Eccles respondis al la diskutado.

R050.—Resumoj Kaj Aludoj.

Kompilita de la *Radio Research Board* (Radio-Esplorada Komitato), kaj publikigita laŭ aranĝo kun la Brita Registara Fako de Scienca kaj Industria Esplorado.

R064.—La Berlin'a Senfadena Ekspozicio.

Unue estas priskribo de la konstruaĵo speciale konstruita por enteni la ekspozicion, kaj de la apuda turo, kiu portos la antenon de la Berlina Brodkasta Stacio. Poste sekvas priskribo de kelkaj montraĵoj speciale interesaj. Notindaj inter tiuj estas la multoblaj valvoj de la Loewe Radio-Kompanio. Tiuj-ĉi estas disvolvitaj el la laborado de von Ardenne kaj Heinert, kiuj uzas anodajn rezistancojn kelkmegomajn kun valvoj de granda amplifa proporcio. En unu okazo du efektivaj valvoj kun kupliloj por altfrekvenca amplifado estas priskribitaj, kaj en alia okazo tri efektivaj valvoj kun kupliloj por malaltfrekvenca amplifado; en ĉiu okazo unu bulbo entenas la tuton. Presitaj estas fotografaĵoj de ĉi tiuj valvoj.

Poste priskribitaj estas kvarcaj resonatoroj muntitaj en vakua tubo, kun miksaĵo de heliumo kaj neono je malalta premo. Kiam la kvarca stangeto vibras, ĝia surfaco estas kovrita je luma ardo, kiu utilas kiel tre sentema resonanca indikatoro. Aranĝo de kvin tiaj resonatoroj, ĉiu estante malsimila je l'aliaj per unu parto en 1000, estas montrita por la kontrolo de frekvenca variado.

Sekvas priskribo de la "Protos" Laŭtparolilo de Siemens-Halske, kun fotografaj ilustraĵoj. Estas ankaŭ cirkvita diagramo kaj fotografaĵo de la Lorenz "Neutro" kvarvalva aparato, kaj la artikolo finiĝas per priskribo de valvoj kun unuobla filamento, sed kun krado sur unu flanko kaj anodo sur alia. Tiuj-ĉi estas utiligeblaj anstataŭ du apartaj valvoj en ordinara duvalva kaskado, aŭ kun transformatoroj ĉecentre konekteblaj por "puŝ-tira" funkciado, ambaŭ aranĝoj estante montritaj diagrame.

R200.—MEZUROJ KAJ NORMOJ.

R261.—La Termiona Voltmetro.—W. B. Medlam and U. A. Oschwald.

Daŭrigita kaj finita el la antaŭa numero.

En la nuna parto, la tria tipo, t.e., Rekta Krada Retroglitebla Tipo, estas unue pritraktita. Oni montras aranĝon por uzi la anodan mikroampermetron kun taŭga rezistanco kiel voltmetron por mezuri la kradan inklinon. Presitaj estas kurvoj kaj tabeloj de eksperimentaj rezultoj por montri la konduton de ĉi tiu tipo sub la ĝeneralaj rubrikoj antaŭe cititaj. Oni diras, ke normiga stabileco estas avantaĝo de ĉi tiu tipo.

Tipo IVa, poste diskutita, estas de la tipo Defleksa - kiel ĉe la Moullin'a instrumento—uzanta Anodkurvan Rektifadon kun kradrezistanco kaj kondensatoro, la negativa tensio estante aplikita tra la krada rezistanco por funkcii la valvon ĉe la anoda kurvo.

Tipo Va estas de la krada retroglitebla tipo, kun krada rezistanco kaj kondensatoro, la krada inklina baterio denove funkcianta tra la krada rezistanco.

La lasta Tipo VIa estas nomita de l'aŭtoroj, la "Refleksa Voltmetro." Ĉi tiu uzas la defleksan

Digitized by Google

principon de la Moullin'a modelo—Tipoj I kaj II—kun aldono de alta rezistanco komuna je la krada kaj anoda cirkvitoj, tiel ke la volta perdo ĉe ĝi kaŭze de anoda kurento tra ĝi agas kiel aldona negativa inklino ĉe la krado. Ci tio permesas la aplikon de pligrandaj tensioj ĉe la krado antaŭ ol komenciĝas krada kurento. Oni ankaŭ montras, ke ĉi tiu refleksa ago estas aplikebla al la Tipo IVa retroglitebla voltmetro.

En la fina sekcio la aŭtoroj diskutas la taŭgecon de la diversaj tipoj por malsimilaj celoj, rekomendante la lastnomitan por ĝeneralaj celoj. Aldonaĵo pritraktas la alternkurentan normigon de la voltmetroj.

R400.—SISTEMOJ DE LABORADO.

R401.—Lastatempaj Disvolviĝoj de Mallongonda Senfadena Telegrafio.—H. Rukop.

Fina daŭrigo el antaŭa numero. La nuna parto traktas aparte pri la laborado de la Telefunken Kompanio je mallongonda interkomunikado, unue inaugŭrita inter Naŭen kaj Buenos Ajreso. Estas priskriboj pri la stacioj, kiuj sin okupas je la sendado, kaj pri la valvoj uzitaj, kun fotografaj ilustraĵoj. Tri sendiloj ĝis 2 aŭ 3 kilovatoj (antena potenco) estas uzitaj, dum kvara, uzanta akvemalvarmigitajn valvojn, povus generi ĝis ĉirkaŭ 16 k.v. de altfrekvenca potenco. Ondlongoj de 70 ĝis 13 metroj estas uzitaj.

Oni montras kurvojn de rezultoj atingitaj inter Germanujo kaj Buenos Ajreso, Germanujo kaj Javo, kaj Germanujo kaj Japanujo. Je kelkaj okazoj, du stacioj sendis samtempe per la sama potenco, sed laŭ malsamaj ondlongoj. Apudaj grafikaĵoj montras la distribuon de taglumo kaj mallumo dum la eksperimentoj.

Oni diris ke, per taŭga serĉado por ondlongoj, per sendo samtempe per kelkaj sendiloj, k.t.p., oni povis starigi preskaŭ plene fidindan noktan servadon kun Buenos Ajreso; diagramo montras la relativajn trafikojn traktitajn dum ses monatoj en 1925a. La fina paragrafo resumas la nunan pozicion, kaj diras ke ondoj de 40 metroj kaj malpli montris sin multe superaj je ondoj de 40 ĝis 100 metroj, kaj ke klara optimumo estas rekonebla inter 20 kaj 18 metroj. Laborado pri la temo ankoraŭ progresas.

R500.—APLIKOJ KAJ UZOJ.

R545.009.2.—Amatora Longdistanca Laborado.—H. N. Ryan.

La perioda kontribuaĵo pri ĉi tiu temo. La nuna noto pritraktas la "QRP" semajnon (organizitan de la Radio Societo de Granda Britujo por la unua semajno en Novembro), kaj la funkciadon kaj procedon je interkomunikado.

R800.—NE-RADIAJ TEMOJ.

R510.—Matematikoj por Senfadenaj Amatoroj.—F. M. Colebrook.

Daŭrigo el antaŭaj numeroj. La nuna parto traktas pri la solvo de Ekvacioj, sub la rubriko de Ekvacioj por Unu Nekonita Numero, la Linia Ekvacio por Unu Nekonita Numero, la Kvadrata Ekvacio, Ekvacioj redukteblaj je Kvadratoj, la ĝenerala Ekvacio de la *n*a Grado, k.t.p.

Digitized by Google

Some Recent Patents. [R008

The following abstracts are prepared, with the permission of the Controller of H.M. Stationery Office, from Specifications obtainable at the Patent Office, 25, Southampton Buildings, London, W.C.2, price 1/- each.

AN UNDERGROUND AERIAL.

(*Application date, 2nd December, 1925. No. 256,837.*)

A form of shielded underground aerial is described in the above British Patent by J. D. Gibson and J. R. Gibson. The novelty of the invention, of course, lies in the particular construction of the aerial, which consists essentially of a conductor insulated from and surrounded by a metal shield. The general idea of the aerial can be obtained by referring to the accompanying illustration in which it will be seen that it comprises a conductor *C*, covered by insulating material *M*, and surrounded by a lead or similar metal sheath *L*. The sheath, however, is not continuous, but is divided into two portions, a small gap being left. The two ends of the sheath are then electrically connected with a copper wire or strip *W*, the surface of the insulating material where the break in the sheath occurs being further covered with other insulating material *I*. The imbedded end of the aerial is also covered with a lead cap *K*, while the other end is taken up through the ground to the receiver. In an alternative modification of the

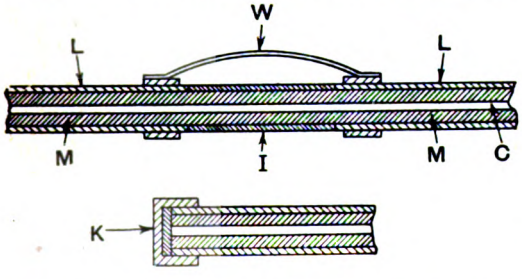

invention the free end of the aerial can terminate at the surfaces of the ground, and connection is made from this end with an ordinary lead to the set.

A FLOATING BATTERY.

(*Application date, 15th October, 1925. No. 258,739.*)

A floating battery, *i.e.*, one which is connected across a source of supply from which energy is being drawn, is used in many branches of electrical engineering. A particular form of floating battery circuit is described in the above British Patent by E. Heese. The accompanying diagram shows an ordinary battery consisting of two cells *C*, connected to the supply mains *S* through a lamp resistance *L*, the current for the filament circuit of a valve receiver being taken across the two cells, *i.e.*, at *X* and *Y*. This, of course, is quite a normal circuit, and the novelty of the invention lies in the type of cells used, and the method of controlling the charge and discharge current, either by hand-operated switches, or by automatic cut-outs. The specification states that the charging current may be made exactly equal to the discharge current, so that there is no tendency for the cells to over-

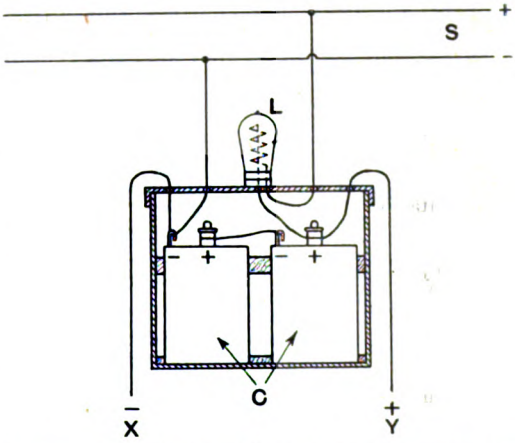

charge. One of the claims of the invention is for the use of a lead-copper accumulator, which is claimed to be almost indestructible, and can be kept in a charged condition for years without ill effects. Another type of cell which it is stated may be used is the rechargeable carbon-manganese dioxide-zinc cell. The illustration shows the floating battery connected to a source of direct current supply, but the invention also provides for the use of rectified alternating current, in conjunction with the floating battery described.

REACTION REJECTOR CIRCUIT.

(*Application date, 9th July, 1925. No. 258,969.*)

It is customary to eliminate undesired signals by the use of rejector circuits, increased selectivity being obtained by using a reaction-rejector circuit, that is, a tuned circuit associated with a receiving system in which a negative resistance effect is produced so as to lower the effective resistance of that circuit, and, therefore, bring about greater selectivity of the whole system. Reaction-rejector circuits have been coupled to the ordinary receiving system either directly or inductively, and former arrangements have necessitated the use of a separate valve for bringing about the negative resistance effect. A patent, granted to Igranic Electric Limited and P. W. Willans, No. 258,969, gives details of a reaction-rejector circuit in which the low frequency or other amplifying valve is used for producing a negative resistance effect in the rejector circuit. The accompanying illustration should

Digitized by Google

make the invention quite clear. Here the detector valve V_1 is coupled to an amplifying valve V_2 by a low frequency transformer T, the anode circuit of the second valve containing the usual telephones P. The aerial circuit comprises an ordinary aerial inductance coupled to a tuned circuit connected between the grid and filament of the first valve V_1, a grid-leak and condenser being used for detection purposes. Between the grid of the second valve and the upper end of the secondary winding of the low

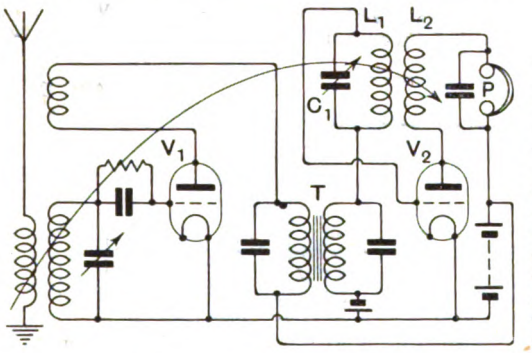

frequency transformer T a tuned circuit L_1 C_1 is included. Coupled to the inductance L_1 is another inductance L_2 which is also in the anode circuit of the second valve. The two inductances are coupled in such a way as to bring about a regenerative effect, thereby materially reducing the effective resistance of the circuit L_1 C_1. This circuit is then coupled to the aerial circuit or the input circuit of the first valve, where it acts as an ordinary rejector or absorption wave-trap, the circuit L_1 C_1 being tuned to the undesired signal.

A CRYSTAL AMPLIFIER.

(*Application date, 1st September, 1925. No. 259,005.*)

A form of crystal amplifier which can easily be added to an existing crystal set is described in the above British Patent by J. S. Smith and S. C. Pearce. The accompanying illustration shows one modification of the invention. A simple form of crystal circuit is shown, consisting of an inductance L_1 tuned by a condenser C_1, in conjunction with the usual aerial A and earth connection E. Another inductance L_2, comprising the secondary circuit, is coupled to the aerial inductance, and is shunted by the usual telephones T and detector D. The connection between the earth and the lower end of the inductance L_1 is broken by two condensers K, between which another crystal combination M is connected. This crystal combination

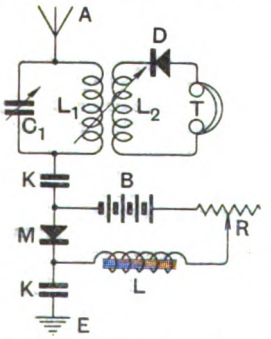

is energised by a battery B in series with a choke L and resistance R. It is stated that with suitable adjustment of the battery voltage, the resistance and contact pressure of the crystal combination can easily be found, when the rectified currents in the telephones will be considerably amplified.

RESISTANCE AMPLIFIER.

(*Application date, 18th May, 1925. No. 258,315.*)

A resistance amplifier in which the coupling between the anode and grids of the valves is by means of resistances is claimed in the above British Patent by S. B. Smith. By referring to the illustration it will be seen that the anode of one valve is coupled to the grid of the next valve by means of a potentiometer, the circuit being so arranged that the positive potential which would be conveyed to the grid from the anode of the preceding valve is balanced out by a negative potential derived from a bias battery. An amplifier of this type, of course, can be used for magnifying the effect of a direct current voltage applied between the grid and filament of the first valve. The action of the amplifier can be easily understood by referring to the accompanying illustration. The

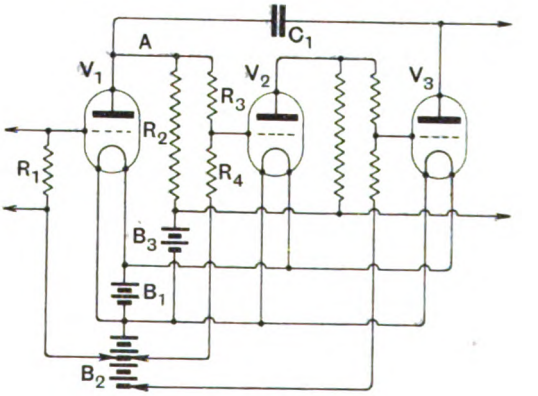

potentials to be amplified are applied across a resistance R_1, constituting the input circuit of the first valve. The lower end of this resistance is taken to a tapping on the bias battery B_2, so as to provide the grid of the first valve with a suitable bias voltage. A resistance R_2 is included in the anode circuit of the valve V_1, the other side, of course, being connected to the positive terminal of the anode battery B_3. The anode A of the first valve is coupled to the grid of the second valve V_2 through a resistance R_3, which comprises one-half of a potentiometer R_3 R_4. The ohmic value of these resistances is considerably greater than that of the anode resistance R_2. The other half of the potentiometer R_4 is taken to the negative tapping on the bias battery B_2, this tapping being so arranged that the negative potential is more than sufficient to neutralise the positive potential conveyed from the anode A to the grid, thereby giving the grid a suitable negative potential. The other valves are coupled in a similar manner.

Digitized by Google

If there is any tendency for the amplifier to generate oscillations owing to stray capacity it may be stabilised by placing a condenser C_1 between the anode of the valve V_1 and the anode of the valve V_3, where the condenser acts, of course, as an ordinary anti-reaction capacity.

A MAINS RECEIVER.

(*Application date, 29th June, 1925. No. 258,931.*)

Some details of a system of utilising the electric light mains for the supply of power to a receiver is described in the above British Patent by S. Iredale. The accompanying illustration shows a modification of the circuit suitable for use with direct current mains. The supply mains *DC* are taken through two fuses *F* to a resistance R_1, and a floating battery *B*, from which the filament supply is drawn at *LT*. Another resistance R_2 is connected between the supply mains, tapping points being provided at *X Y* and *Z*. The two tapping points *X* and *Y* are respectively shunted by condensers C_1 and C_2, alternative high tension voltages being available at *M W* and *O*. In order

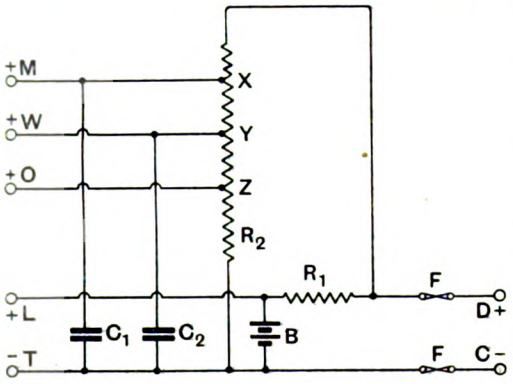

to prevent a short-circuit occurring through the earth connection a series condenser is placed in the earth lead to the set. Again, in order to prevent accidental shock to the wearer of the headphones, the latter are connected through an ordinary telephone transformer to the last valve circuit. The value of the resistance R_1, and the voltage of the battery *B*, of course, are determined by the particular requirement of the valve filaments. A similar circuit is also shown for use with A.C. mains, in which case rectifying valves are connected in the usual manner.

CRYSTAL-VALVE CIRCUIT.

(*Application date, 25th June, 1925. No. 258,927.*)

A receiver embodying a crystal rectifier and a reaction circuit controlled by a low frequency amplifying valve is described by J. Sieger in the above British Patent. By referring to the accompanying illustration it will be seen that the input circuit of the receiver comprises an inductance such as a frame aerial L_1 tuned by a variable condenser C_1. Potentials across this tuned circuit are rectified by a crystal detector *D* from which they are passed on by a low frequency transformer *T*, through an inductance L_2 to the grid circuit of the valve *V*. The inductance L_2 is coupled to the inductance L_1. The anode circuit of the valve

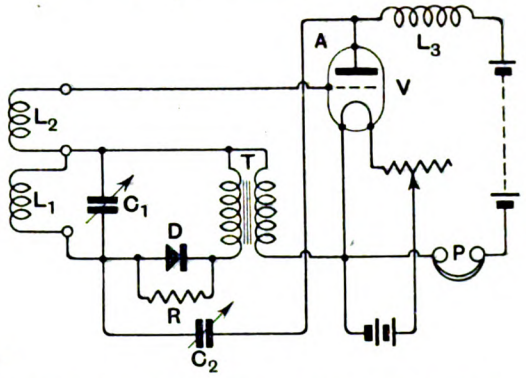

contains, in addition to the usual telephones *P*, a high frequency choke L_3. A reaction condenser C_2 is connected between the anode *A* and one side of the inductance L_1. If the circuit is carefully followed out it will be seen that the two inductances L_1 and L_2 are connected respectively in the anode and grid circuits of the valve, capacity reaction, of course, being obtained by means of the variable condenser C_2. An additional feature of the invention is the use of a resistance *R*, which is connected across the detector *D* with a view to stabilising the set. Variation in contact pressure of the crystal detector, either intentionally or through vibration, would tend to alter the resistance of the input circuit of the valve, thereby causing the set to burst into oscillation when a critical reaction setting is employed. The use of a resistance in this manner is stated to overcome this difficulty quite effectively.

A REISZ MICROPHONE.

(*Application date, 8th February, 1926. No. 258,476.*)

The construction of one form of Reisz microphone is described in the above British Patent by E. Reisz. The novelty of the invention lies essentially in the use of a rubber or similar diaphragm, to which are fixed a number of separate carbon granules. The accompanying illustration shows one form of the microphone. Here the diaphragm consists of a sheet of rubber, which is not stretched, or only stretched to a very small extent, covered with a layer of carbon granules *G*.

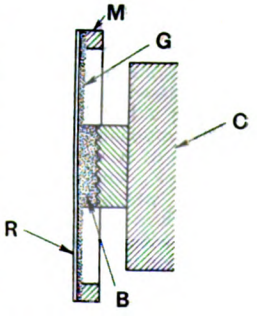

Digitized by Google

The diaphragm is prepared by coating it with rubber solution, and dusting over with carbon granules. Only sufficient solution is used to cause the granules to adhere to the diaphragm without causing them to adhere to themselves. Contact is made with the diaphragm by means of a metal ring M. Some larger granules B are placed between the granuled diaphragm and a solid carbon block C, connection to the microphone being made to the metal ring and the carbon block C. The specification states that the diaphragm is practically non-resonant, and a mathematical consideration of its time period is given.

CRYSTAL-CONTROLLED RECEIVER.

(*Application date, 27th July, 1925. No. 258,707.*)

The Western Electric Company Limited describe in the above British Patent, No. 258,707, a series of receiving systems utilising the piezo-electric effect. The accompanying illustration shows one form of quartz crystal-controlled receiver in which the first valve V_1 produces oscillations controlled by a quartz crystal Z, held between two metallic plates. The input comprises an aerial A, inductance L_1 and earth E, the inductance L_1 being coupled to a centre tap inductance L_2. The inductance L_2 is tuned by a variable condenser C_1, and is connected between the grid of the valve and one side of the crystal, the other side of the crystal being connected to the anode. The centre tap of the inductance L_2 is not taken directly to the filament but through a bias battery B_1, which is adjusted in such a manner that the valve V_1 operates on the desired portion of the curve. The locally produced oscillations combine with the received oscillations in the valve V_1, where they are detected, and passed on by a low frequency transformer T, having a low impedance primary winding, and a high impedance secondary winding, to the grid circuit of a valve V_2. The anode circuit of the valve V_2 contains a low frequency choke L_3, across which the telephones P are connected through a condenser C_2. A condenser C_2, provided with a switch S is shown connected across the secondary of the transformer T. The object of this condenser is to provide a resonant circuit with the secondary winding of the transformer, which can thus be tuned to the mean of the low frequencies produced in the output circuit of the detector valve V_1. The specification includes several other modifications of the invention, where a similar type of circuit is used for super-heterodyne reception, and also for side band reception, where an accurately constant frequency of local oscillation is, of course, an absolute necessity. The specification is very detailed, and should be carefully studied by all those who are interested in quartz crystal-controlled oscillators.

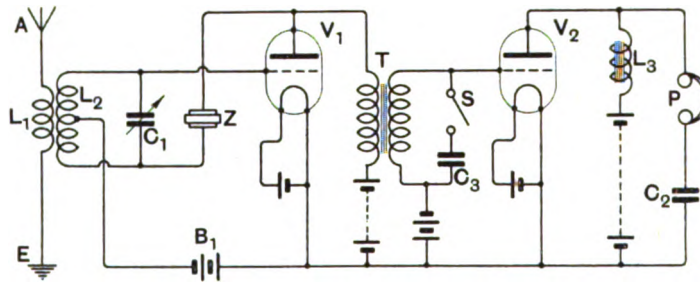

IMPROVING SELECTIVITY.

(*Application date, 12th May, 1925. No. 256,689.*)

A method of improving the selectivity of wireless receiving systems is claimed in the above British Patent by A. G. Benstead and Rotax (Motor Accessories), Limited. The invention should be quite clear by reference to the accompanying illustration. Here it will be seen that an ordinary aerial tuning circuit consists of an aerial L_1 tuned by a capacity C_1 in series with an aerial condenser C_2 forming the input circuit of a valve V. Loosely coupled to the inductance L_1 is a closed oscillatory circuit L_2 L_3. A reaction coil L_3 in the anode circuit of the valve V is then coupled to the inductance L_2 instead of the normal aerial inductance L_1. The chief feature of the invention lies in the fact that the intermediate oscillatory circuit L_2C_3 is electrically disconnected from the remainder of the circuit.

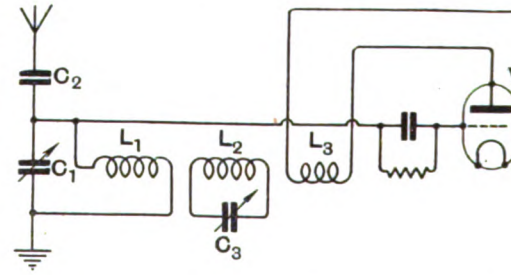

Digitized by Google

Digitized by Google

DATE DUE

OCT - 9 1969			
MAR 28 1997			
JUN 30 1998			

Digitized by Google

UNIVERSITY OF MICHIGAN
3 9015 02103 7497

Digitized by Google

UNIVERSITY OF MICHIGAN
3 9015 02103 7497

Digitized by Google

Digitized by Google